View of project site from NE corner

View of project site from NE corner

View of project site from NW corner

SITE PHOTOS

APPENDIX A

'Ewa Makai Middle School

State of Hawai'i, Department of Education

Source:
SSFM International, inc.
2008

View of project site from East
(from Kapolei Parkway)

View of project site from SW corner
along south border

Intersection of Keanui Drive and
Kapolei Parkway from south

SITE PHOTOS

APPENDIX A

'Ewa Makai Middle School
State of Hawai'i, Department of Education

Source:
SSFM International, inc.
2008

DEPARTMENT OF TRANSPORTATION SERVICES
CITY AND COUNTY OF HONOLULU
650 SOUTH KING STREET, 3RD FLOOR
HONOLULU, HAWAII 96813
Phone: (808) 768-8305 • Fax: (808) 523-4730 • Internet: www.honolulu.gov

MUFI HANNEMANN
MAYOR

MELVIN N. KAKU
DIRECTOR

RICHARD F. TORRES
DEPUTY DIRECTOR

TP5/07-210980R

July 6, 2007

SSFM INTERNATIONAL, INC.
RECEIVED
JUL 10 2007
jke
FILE

FILE COPY

Mr. Jared K. Chang, Planner
SSFM International, Inc.
501 Sumner Street, Suite 620
Honolulu, Hawaii 96817

Dear Mr. Chang:

Subject: Ewa Makai Middle School

Thank you for your May 29, 2007 letter, requesting our pre-consultation comments on the subject project. We have the following comments for your consideration as you prepare the draft environmental assessment (EA):

1. If future public bus transit operations and facilities are envisioned adjacent to the project site, then early coordination with this department's Public Transit Division is essential. This will ensure that planned roadway improvements incorporate bus operations in their planning and design, including Americans with Disabilities Act (ADA) compliance.

2. The location of the buildings should facilitate around-campus mobility by persons with disabilities. It is also recommended that the vehicular access zone for student drop-offs/pick-ups be designed for ADA accessibility, in general, and to facilitate ingress/egress by TheHandi-Van vehicles, in particular.

3. The draft EA should include a traffic impact study. This study should address and discuss the traffic impacts of the project on the City street network. Mitigation measures proposed to minimize the impact of the project on City roadways should also be discussed. The draft EA should address pedestrian access and safety to the proposed school. This should include measures for providing safe routes to school from

surrounding residential neighborhoods, particularly those within close proximity to the school.

4. Traffic control plans should be prepared for each phase of the construction work. In order to minimize traffic impacts, project construction should be phased to ensure that work scheduled for a certain day can be started and completed during the same work day. Limiting construction work to off-peak daytime hours should be used as a means to further minimize traffic impacts on the surrounding neighborhood.

5. Appropriate project notification should be provided to the area neighborhood board, as well as community residents, businesses, emergency personnel, bus personnel, etc. They should be kept apprised of the details of the proposed project and the impacts the project may have on the local street network area.

We look forward to reviewing the draft EA. Should you have any questions regarding these comments, please contact Ms. Faith Miyamoto of the Transportation Planning Division at 768-8350.

Sincerely,

Melvin N. Kaku

MELVIN N. KAKU
Director

SSFM INTERNATIONAL, INC.
501 Sumner Street, Suite 620
Honolulu, Hawaii 96817
Phone: (808) 531-1308
Fax: (808) 521-7348

Project Managers, Planners, & Engineers
American Council of Engineering Companies, Member

October 28, 2008

SSFM 2007_032.000

Mr. Wayne Yoshioka, Director
Department of Transportation Services
City and County of Honolulu
650 South King Street. Third Floor
Honolulu, HI 96813

Dear Director Yoshioka:

Subject: 'Ewa Makai Middle School
TMK: 1-9-069:027
Pre-Assessment Comments, Draft Environmental Assessment
'Ewa, O'ahu, Hawai'i

Thank you for the Department of Transportation Services pre-assessment comments on the 'Ewa Makai Middle School. Your comments are addressed in the order received.

1. TheBus currently provides service in this area. With the completion of the rapid transit project, it is expected that current routes will be altered to serve as feeders into the rapid transit line. The State Department of Education will provide school bus service to 'Ewa Makai Middle School, approximately eight buses in the morning and again in the afternoon.

2. Private vehicle and bus pick-up and drop-off will be at the first driveway, and the access zone design will incorporate ADA accessibility for HandiVan, the school buses and others.

3. A Traffic Impact Analysis Report (TIAR) is included in the Draft Environmental Assessment (EA), including a discussion of mitigations. The TIAR recommends right turn lanes at two locations. Furthermore, the TIAR demonstrates that traffic would improve if the two traffic signals were installed before 2010, one at Kapolei Parkway and Keaunui Drive and the other at Kapolei Parkway and Keoneula Boulevard. These two traffic signals were identified in the traffic studies for 'Ewa by Gentry and for Ocean Pointe as mitigation of those projects at the appropriate time during build-out that they are warranted. . Consistent with your comment regarding safe routes to schools, these two signals should have timing that provides the necessary timing for pedestrian crossing, as nearly one-third of the students are expected to walk or bicycle to school.

4. A traffic control plan for construction will be prepared to minimize traffic impacts. Given the location of the school off of a new, as yet built road, this should not be a major problem.

5. The project proponent will notify the neighborhood board, community association, emergency personnel, TheBus, and area businesses regarding details of the project and it's proposed schedule and impacts.

If you have any questions on this matter, please call me at (808) 531-1308.

Sincerely,

SSFM INTERNATIONAL, INC.

Jared K. Chang
Planner

POLICE DEPARTMENT

CITY AND COUNTY OF HONOLULU

801 SOUTH BERETANIA STREET · HONOLULU HAWAII 96813
TELEPHONE: (808) 529-3111 INTERNET: www.honolulupd.org

MUFI HANNEMANN
MAYOR

BOISSE P. CORREA
CHIEF

GLEN R. KAJIYAMA
PAUL D. PUTZULU
DEPUTY CHIEFS

OUR REFERENCE BS-DK

SSFM INTERNATIONAL, INC.
RECEIVED
JUN 2 0 2007

June 18, 2007

FILE COPY

Mr. Jared K. Chang
Planner
SSFM International, Inc.
501 Sumner Street, Suite 620
Honolulu, Hawaii 96817

FILE

Dear Mr. Chang:

This is in response to your letter of May 29, 2007, requesting comments on a Pre-Assessment Consultation, Draft Environmental Assessment, for the 'Ewa Makai Middle School project.

This project should have no unanticipated impact on the facilities or operations of the Honolulu Police Department.

If there are any questions, please call Major Michael Moses of District 8 at 692-4253 or Mr. Brandon Stone of the Executive Office at 529-3644.

Sincerely,

BOISSE P. CORREA
Chief of Police

By
JOHN P. KERR
Assistant Chief of Police
Support Services Bureau

Serving and Protecting With Aloha

SSFM INTERNATIONAL

SSFM INTERNATIONAL, INC.
501 Sumner Street, Suite 620
Honolulu, Hawaii 96817
Phone: (808) 531-1308
Fax: (808) 521-7348

Project Managers, Planners, & Engineers
American Council of Engineering Companies, Member

October 28, 2008

SSFM 2007_032.000

Mr. John Kerr, Assistant Chief of Police
Support Services Bureau
Police Department
City and County of Honolulu
801 South Beretania Street
Honolulu, Hawai'i 96813

Dear Mr. Kerr:

Subject: 'Ewa Makai Middle School
TMK: 1-9-069:027
Pre-Assessment Comments, Draft Environmental Assessment
'Ewa, O'ahu, Hawai'i

Thank you for the letter dated June 18, 2007 providing pre-assessment consultation comments for the preparation of the Draft Environmental Assessment (Draft EA) for the subject project.

We note that your department has no unanticipated impact on the facilities or operations. A copy of the Draft EA will be provided when published.

If you have any questions on this matter, please give me a call at (808) 531-1308. Thank you.

Sincerely,

SSFM INTERNATIONAL, INC.

Jared K. Chang
Planner

SSFM INTERNATIONAL, INC.
501 Sumner Street, Suite 620
Honolulu, Hawaii 96817
Phone: (808) 531-1308
Fax: (808) 521-7348

Project Managers, Planners, & Engineers
American Council of Engineering Companies, Member

May 29, 2007

SSFM 2007_032

RECEIVED
JUN 20 2007
jkc
FILE

FILE COPY

Mr. Lawrence T. Yamamoto, State Conservationist
Natural Resources Conservation Service
U.S. Department of Agriculture
300 Ala Moana Boulevard, Room 4-118
Honolulu, HI 96850-0050

Dear Mr. Yamamoto:

Subject: 'Ewa Makai Middle School
Pre-Assessment Consultation for Draft Environmental Assessment
'Ewa, O'ahu, Hawai'i

The State of Hawai'i, Department of Education (DOE), is proposing the new 'Ewa Makai Middle School project in the 'Ewa District, the Island of O'ahu.

The purpose of this project is to provide a new middle school to accommodate 'Ewa's increasing student population as well as support the community needs for such facilities. A project summary and accompanying site location map (Exhibit A) and Site Plan (Exhibit B) are enclosed for your information and records.

A Draft Environmental Assessment (Draft EA) is now being prepared for this project to comply with State environmental regulations under Hawai'i Revised Statutes (HRS) Chapter 343, and Hawai'i Administrative Rules (HAR) Title 11, Chapter 200, Department of Health, State of Hawai'i. Therefore, this letter and attachments are being provided to solicit any comments, concerns, or regulatory requirements you may have in regards to this project so that it may be addressed in the Draft EA.

We would greatly appreciate your cooperation in providing us with any written comments within 21-days from the date of this letter. If you have any questions on this matter, please call me at (808) 531-1308. Thank you.

SSFM INTERNATIONAL, INC.

Jared K. Chang
Planner
Email: jchang@ssfm.com

cc: Project Summary, Location Map (Exhibit A) and Site Plan (Exhibit B)

UNITED STATES DEPARTMENT OF AGRICULTURE
Natural Resources Conservation Service

HAWAII INTERDISCIPLANARY REVIEW FORM

Review of: Pre-Assessment for DEA 'Ewa Makai Middle School
(Name of Document) 'Ewa, Hawaii

*Review Leader: _____ Date Distributed: 5/29/07

Comment to be returned to Review Leader by: 6/18/07

	Reviewer	Initial	Date Comments Returned
	Deputy State Conservationist		
	State Conservation Engineer		
✓	(acting) State Soil Scientist	MM	6/12/07
	State Resource Conservationist		
	State Biologist		
	Public Affairs Specialist		
	Design Engineer		
	Civil Engineer		
	Plant Materials Specialist		
✓	DC Area Service Ctr.	CK	6/8/07

Comments: None at this time
Please send TMK #.

*Review Leader will indicate staff member(s) requested to review and concur in this document.

SSFM INTERNATIONAL, INC.
501 Sumner Street, Suite 620
Honolulu, Hawaii 96817
Phone. (808) 531-1308
Fax: (808) 521-7348

Project Managers, Planners, & Engineers
American Council of Engineering Companies, Member

October 28, 2008

SSFM 2007_032.000

Mr. Lawrence T. Yamamoto, State Conservationist
Natural Resources Conservation Service
U.S. Department of Agriculture
300 Ala Moana Boulevard, Room 4-118
Honolulu, Hawai'i 96850-0050

Dear Mr. Yamamoto:

Subject: 'Ewa Makai Middle School
TMK: 1-9-069:027
Pre-Assessment Comments, Draft Environmental Assessment
'Ewa, O'ahu, Hawai'i

Thank you for the letter dated June 18, 2007 providing pre-assessment consultation comments for the preparation of the Draft Environmental Assessment (Draft EA) for the subject project.

We note that your department has no comments at this time. The TMK number has been provided above as requested. A copy of the Draft EA will be provided when published.

If you have any questions on this matter, please give me a call at (808) 531-1308. Thank you.

Sincerely,

SSFM INTERNATIONAL, INC.

Jared K. Chang
Planner

LINDA LINGLE
GOVERNOR

RUSS K. SAITO
COMPTROLLER

BARBARA A. ANNIS
DEPUTY COMPTROLLER

(P)1138.7

STATE OF HAWAII
DEPARTMENT OF ACCOUNTING AND GENERAL SERVICES
P.O. BOX 119, HONOLULU, HAWAII 96810

JUN 15 2007

SSFM INTERNATIONAL, INC.
RECEIVED
~~JUN 19 2007~~
jkc

FILE COPY

FILE

Mr. Jared K. Chang, Planner
SSFM International, Inc.
501 Sumner Street, Suite 620
Honolulu, Hawaii 96817

Dear Mr. Chang:

Subject: Ewa Makai Middle School
Pre-Assessment Consultation for Draft Environmental Assessment
Ewa, Oahu, Hawaii

Thank you for your May 29, 2007 letter. This project does not directly impact any of the Department of Accounting and General Services' projects or existing facilities, and we have no comments to offer at this time.

If you have any questions, please call me at 586-0400 or have your staff call Mr. Bruce Bennett of the Public Works Division at 586-0491.

Sincerely,

RUSS K. SAITO
State Comptroller

c: Mr. Laurence K. Lau, DOH-OEQC

SSFM INTERNATIONAL, INC.
501 Sumner Street, Suite 620
Honolulu, Hawaii 96817
Phone: (808) 531-1308
Fax: (808) 521-7348

Project Managers, Planners, & Engineers
American Council of Engineering Companies, Member

October 28, 2008

SSFM 2007_032.000

Mr. Russ K. Saito, State Comptroller
State of Hawaii
Department of Accounting and General Services
P.O. Box 119
Honolulu, Hawai'i 96810

Dear Mr. Saito:

Subject: 'Ewa Makai Middle School
TMK: 1-9-069:027
Pre-Assessment Comments, Draft Environmental Assessment
'Ewa, O'ahu, Hawai'i

Thank you for the letter dated June 15, 2007 providing pre-assessment consultation comments for the preparation of the Draft Environmental Assessment (Draft EA) for the subject project.

We note that your department has no comments to offer at this time. A copy of the Draft EA will be provided when published.

If you have any questions on this matter, please give me a call at (808) 531-1308. Thank you.

Sincerely,

SSFM INTERNATIONAL, INC.

Jared K. Chang
Planner

PHONE (808) 594-1888

FAX (808) 594-1865

STATE OF HAWAI'I
OFFICE OF HAWAIIAN AFFAIRS
711 KAPI'OLANI BOULEVARD, SUITE 500
HONOLULU, HAWAI'I 96813

FILE COPY

SSFM INTERNATIONAL, INC
RECEIVED
JUN 18 2007
JKC

FILE

June 12, 2007

HRD07_3061

Jared K. Chang, Planner
SSFM International
501 Sumner Street, Suite 620
Honolulu, Hawai'i 96817

Dear Mr. Chang:

Re: 'Ewa Makai Middle School
Pre-Assessment Consultation for Draft Environmental Assessment
'Ewa, O'ahu, Hawai'i

The Office of Hawaiian Affairs (OHA) is in receipt of your May 29, 2007 letter initiating consultation prior to the preparation of a draft Environmental Assessment (EA) for a project in 'Ewa, O'ahu.

This important Department of Education project will provide a new middle school to accommodate the project areas increasing student population.

While OHA has no specific comments at this time, we request to continue to be included in any future consultations regarding this project.

Thank you for initiating consultation at this early stage and OHA looks forward to the opportunity of a comprehensive review of the draft EA. Should you have any questions, please contact Keola Lindsey, Lead Advocate-Culture at 594-1904 or keolal@oha.org.

'O wau iho nō,

Clyde W. Nāmu'o
Administrator

SSFM INTERNATIONAL, INC.
501 Sumner Street, Suite 620
Honolulu, Hawaii 96817
Phone: (808) 531-1308
Fax: (808) 521-7348

Project Managers, Planners, & Engineers
American Council of Engineering Companies, Member

October 28, 2008

SSFM 2007_032.000

Mr. Clyde W. Namu'o, Administrator
State of Hawaii
Office of Hawaiian Affairs
711 Kapi'olani Boulevard, Suite 500
Honolulu, Hawai'i 96813

Dear Mr. Namu'o:

Subject: 'Ewa Makai Middle Schoo
TMK: 1-9-069:027
Pre-Assessment Comments, Draft Environmental Assessment
'Ewa, O'ahu, Hawai'i

Thank you for the letter dated June 12, 2007 providing pre-assessment consultation comments for the preparation of the Draft Environmental Assessment (Draft EA) for the subject project.

We note that your department has no comments to offer at this time and will be included in future consultations. A copy of the Draft EA will be provided when published.

If you have any questions on this matter, please give me a call at (808) 531-1308. Thank you.

Sincerely,

SSFM INTERNATIONAL, INC.

Jared K. Chang
Planner

DEPARTMENT OF COMMUNITY SERVICES
CITY AND COUNTY OF HONOLULU
715 SOUTH KING STREET, SUITE 311 • HONOLULU HAWAII 96813 • AREA CODE 808 • PHONE: 527-5311 • FAX 527-5498

MUFI HANNEMANN
MAYOR

DEBORAH KIM MORIKAWA
DIRECTOR

MARK K. OTO
SENIOR ADVISOR

SSFM INTERNATIONAL, INC.
RECEIVED
JUN 15 2007
JKC
FILE
FILE COPY

June 13, 2007

Mr. Jared K. Chang
SSFM International, Inc.
501 Sumner Street, Suite 620
Honolulu, Hawaii 96817

Dear Mr. Chang:

Subject: 'Ewa Makai Middle School
Pre-Assessment Consultation for Draft Environmental Assessment

Thank you for providing us with the opportunity to review and comment on the 'Ewa Makai Middle School Pre-Assessment Consultation for Draft Environmental Assessment (DEA).

We have determined that the subject project will have no impact on the projects and programs of the Department of Community Services at this time. However, we would like to note that Geiger Road is misspelled on the location map that was attached to the letter you sent us regarding this project. We appreciate the opportunity to provide these comments and look forward to reviewing the DEA when it becomes available. Questions regarding this matter may be directed to Mr. Randy Wong at 768-7747.

Sincerely,

Deborah Kim Morikawa
Director

DKM:rg

SSFM INTERNATIONAL, INC.
501 Sumner Street, Suite 620
Honolulu, Hawaii 96817
Phone: (808) 531-1308
Fax: (808) 521-7348

Project Managers, Planners, & Engineers
American Council of Engineering Companies, Member

October 28, 2008

SSFM 2007_032.000

Ms. Deborah K. Morikawa, Director
Department of Community Services
City and County of Honolulu
715 South King Street, Suite 311
Honolulu, Hawai'i 96813

Dear Ms. Morikawa:

Subject: 'Ewa Makai Middle School
TMK: 1-9-069:027
Pre-Assessment Comments, Draft Environmental Assessment
'Ewa, O'ahu, Hawai'i

Thank you for your letter dated June 13, 2007 providing pre-assessment consultation comments for the preparation of the Draft Environmental Assessment (Draft EA) for the subject project.

We note that you have determined that the proposed project will have no impact on the programs of the Department of Community Services at this time. We acknowledge that Geiger Road is misspelled and has been corrected. A copy of the Draft EA will be provided when published.

If you have any questions on this matter, please give me a call at (808) 531-1268. Thank you.

Sincerely,

SSFM INTERNATIONAL, INC.

Jared K. Chang
Planner

Pat Owan

From: Jared Chang
Sent: Tuesday, June 05, 2007 8:19 AM
To: bhutto@scd.hawaii.gov
Subject: Pre-Assessment Consultation - Ewa Makai Middle

Bob,

We appreciate you taking the time to review our pre-assessment consultation information for the Ewa Makai Middle School.

Per our telephone discussion on June 5, 2007, we note the State Civil Defense has no comments on the project at this time.

Mahalo,

Jared K. Chang
SSFM International, Inc.
501 Sumner Street, Suite 620
Honolulu, Hawaii 96817
Direct: (808) 356-1242
Fax: (808) 521-7348

SSFM INTERNATIONAL, INC.
501 Sumner Street, Suite 620
Honolulu, Hawaii 96817
Phone: (808) 531-1308
Fax: (808) 521-7348

Project Managers, Planners, & Engineers
American Council of Engineering Companies, Member

October 28, 2008

SSFM 2007_032.000

Major General Robert Lee
State Civil Defense
3949 Diamond Head Road
Honolulu, Hawai'i 96816

Dear Major General Lee:

Subject: 'Ewa Makai Middle School
TMK: 1-9-069:027
Pre-Assessment Comments, Draft Environmental Assessment
'Ewa, O'ahu, Hawai'i

Thank you for the telephone call on June 5, 2007 providing pre-assessment consultation comments for the preparation of the Draft Environmental Assessment (Draft EA) for the subject project.

We note that your department has no comments on the project at this time. A copy of the Draft EA will be provided when published.

If you have any questions on this matter, please give me a call at (808) 531-1308. Thank you.

Sincerely,

SSFM INTERNATIONAL, INC.

Jared K. Chang
Planner

DEPARTMENT OF DESIGN AND CONSTRUCTION
CITY AND COUNTY OF HONOLULU
650 SOUTH KING STREET, 11TH FLOOR
HONOLULU, HAWAII 96813
Phone: (808) 768-8480 • Fax: (808) 523-4567
Web site: www.honolulu.gov

MUFI HANNEMANN
MAYOR

EUGENE C. LEE, P.E.
DIRECTOR

CRAIG I. NISHIMURA, P.E.
DEPUTY DIRECTOR

SSFM INTERNATIONAL, INC
RECEIVED
JUN 15 2007
jke
FILE

FILE COPY

June 14, 2007

Mr. Jared K. Chang, Planner
SSFM International, Inc.
501 Sumner Street, Suite 620
Honolulu, Hawaii 96813

Dear Mr. Chang:

Subject: Ewa Makai Middle School
Pre-Assessment Consultation for
Draft Environmental Assessment
Ewa, Oahu, Hawaii

Thank you for giving us the opportunity to comment on the above Ewa Makai Middle School Pre-Assessment Consultation for Draft Environmental Assessment (EA).

The Department of Design and Construction (DDC) has no comments to offer at this time, however, DDC would like to see the draft EA when it is published.

Very truly yours,

Eugene C. Lee, P.E.
Director

ECL:lt (210985)

c: DDC Facilities Division

SSFM INTERNATIONAL, INC.
501 Sumner Street, Suite 620
Honolulu, Hawaii 96817
Phone: (808) 531-1308
Fax: (808) 521-7348

Project Managers, Planners, & Engineers
American Council of Engineering Companies, Member

October 28, 2008

SSFM 2007_032.000

Mr. Eugene Lee, Director
Department of Design and Construction
City and County of Honolulu
650 South King Street
Honolulu, Hawai'i 96813

Dear Mr. Lee:

Subject: 'Ewa Makai Middle School
TMK: 1-9-069:027
Pre-Assessment Comments, Draft Environmental Assessment
'Ewa, O'ahu, Hawai'i

Thank you for the letter dated June 14, 2007 providing pre-assessment consultation comments for the preparation of the Draft Environmental Assessment (Draft EA) for the subject project.

We note that your department has no comments to offer at this time. A copy of the Draft EA will be provided when published.

If you have any questions on this matter, please give me a call at (808) 531-1308. Thank you.

Sincerely,

SSFM INTERNATIONAL, INC.

Jared K. Chang
Planner

LINDA LINGLE
GOVERNOR OF HAWAII

ALLAN A. SMITH
INTERIM CHAIRPERSON
BOARD OF LAND AND NATURAL RESOURCES
COMMISSION ON WATER RESOURCE MANAGEMENT

STATE OF HAWAII
DEPARTMENT OF LAND AND NATURAL RESOURCES
LAND DIVISION

POST OFFICE BOX 621
HONOLULU, HAWAII 96809

SSFM INTERNATIONAL, INC.
RECEIVED
JUN 22 2007
jkc
FILE

FILE COPY

June 20, 2007

SSFM International
501 Sumner Street Suite 620
Honolulu, Hawaii 96817

Attention: Jared Chang

Gentlemen:

Subject: Pre-Assessment Consultation for Draft Environmental Assessment on Department of Education Ewa Makai Middle School, Ewa, Oahu

Thank you for the opportunity to review and comment on the subject matter. The Department of Land and Natural Resources' (DLNR) Land Division distributed or made available a copy of your report pertaining to the subject matter to DLNR Divisions for their review and comment.

Other than the comments from Land Division – Oahu District, the Department of Land and Natural Resources has no other comments to offer on the subject matter. Should you have any questions, please feel free to call our office at 587-0433. Thank you.

Sincerely,

Russell Y. Tsuji
Administrator

LINDA LINGLE
GOVERNOR OF HAWAII

ALLAN A. SMITH
INTERIM CHAIRPERSON
BOARD OF LAND AND NATURAL RESOURCES
COMMISSION ON WATER RESOURCE MANAGEMENT

STATE OF HAWAII
DEPARTMENT OF LAND AND NATURAL RESOURCES
LAND DIVISION

POST OFFICE BOX 621
HONOLULU, HAWAII 96809

June 4, 2007

MEMORANDUM

FR. ~~TO:~~ **DLNR Agencies:**
__Div. of Aquatic Resources
__Div. of Boating & Ocean Recreation
__Engineering Division
__Div. of Forestry & Wildlife
__Div. of State Parks
__Commission on Water Resource Management
__Office of Conservation & Coastal Lands
x_Land Division – Oahu District Gavin Chun, Barbara Lee

TO.

FROM: Russell Y. Tsuji
SUBJECT: Pre-Assessment Consultation for Draft Environmental Assessment for Ewa Makai Middle School
LOCATION: Ewa, Oahu
APPLICANT: SSFM International on behalf of the Department of Education

Transmitted for your review and comment on the above referenced document. We would appreciate your comments on this document. Please submit any comments by June 15, 2007.

If no response is received by this date, we will assume your agency has no comments. If you have any questions about this request, please contact my office at 587-0433. Thank you.

Attachments

( ) We have no objections.
(X) We have no comments.
( ) Comments are attached.

Signed: Gordon Santos
Date: 6/5/07

SSFM INTERNATIONAL

SSFM INTERNATIONAL, INC.
501 Sumner Street, Suite 620
Honolulu, Hawaii 96817
Phone: (808) 531-1308
Fax: (808) 521-7348

Project Managers, Planners, & Engineers
American Council of Engineering Companies, Member

October 28, 2008

SSFM 2007_032.000

Mr. Russell Y. Tsuji, Administrator
State of Hawaii
Department of Land and Natural Resources
Land Division
P.O. Box 621
Honolulu, Hawai'i 96809

Dear Mr. Tsuji:

Subject: 'Ewa Makai Middle School
TMK: 1-9-069:027
Pre-Assessment Comments, Draft Environmental Assessment
'Ewa, O'ahu, Hawai'i

Thank you for the letter dated June 20, 2007 providing pre-assessment consultation comments for the preparation of the Draft Environmental Assessment (Draft EA) for the subject project.

We note that your department and the Land Division have no comments to offer on the subject matter. A copy of the Draft EA will be provided when published.

If you have any questions on this matter, please give me a call at (808) 531-1308. Thank you.

Sincerely,

SSFM INTERNATIONAL, INC.

Jared K. Chang
Planner

LINDA LINGLE
GOVERNOR

ANTHONY J.H. CHING
EXECUTIVE OFFICER

STATE OF HAWAII
DEPARTMENT OF BUSINESS, ECONOMIC DEVELOPMENT & TOURISM
LAND USE COMMISSION
P.O. Box 2359
Honolulu, Hawaii 96804-2359
Telephone: 808-587-3822
Fax: 808-587-3827

SSFM INTERNATIONAL, INC.
RECEIVED
JUL 05 2007
jkc

FILE COPY

FILE

July 2, 2007

Mr. Jared K. Chang, Planner
SSFM International
501 Sumner Street, Suite 620
Honolulu, Hawaii 96817

Dear Mr. Chang:

Subject: Pre-Assessment Consultation for Draft Environmental Assessment
Ewa Makai Middle School
Ewa, Oahu, Hawaii

Thank you for your letter dated May 29, 2007, requesting comments regarding the subject Draft Environmental Assessment.

Pursuant to §205-3.1(c), Hawaii Revised Statutes, and given the location, scope, and nature of the proposed activity, we have no comments to offer at this time.

Please feel free to contact me at 587-3822 should you require clarification or any further assistance.

Sincerely,

ANTHONY J. H. CHING
Executive Officer

SSFM INTERNATIONAL

SSFM INTERNATIONAL, INC.
501 Sumner Street, Suite 620
Honolulu, Hawaii 96817
Phone: (808) 531-1308
Fax: (808) 521-7348

Project Managers, Planners, & Engineers
American Council of Engineering Companies, Member

October 28, 2008

SSFM 2007_032.000

Mr. Orlando Davidson, Executive Officer
Land Use Commission
Department of Business, Economic Development & Tourism
State of Hawai'i
P.O. Box 2359
Honolulu, Hawai'i 96804

Dear Mr. Davidson:

Subject: 'Ewa Makai Middle School
TMK: 1-9-069:027
Pre-Assessment Comments, Draft Environmental Assessment
'Ewa, O'ahu, Hawai'i

Thank you for the letter dated July 2, 2007 providing pre-assessment consultation comments for the preparation of the Draft Environmental Assessment (Draft EA) for the subject project.

We confirm your determination that the project area is in pursuant to §205-3.1, Hawai'i Revised Statutes, and have no comments to offer at this time. A copy of the Draft EA will be provided when published.

If you have any questions on this matter, please give me a call at (808) 531-1308. Thank you.

Sincerely,

SSFM INTERNATIONAL, INC.

Jared K. Chang
Planner

United States Department of the Interior

NATIONAL PARK SERVICE
Pacific West Region
300 Ala Moana Boulevard, Box 50165
Room 6-226
Honolulu, Hawaii 96850-0053

IN REPLY REFER TO:
H4217

May 30, 2007.

SSFM INTERNATIONAL, INC
RECEIVED
JUN 04 2007
JKC
FILE

FILE COPY

Mr. Jared K. Chang, Planner
SSFM International
501 Sumner Street, Suite 620
Honolulu, HI 96817

Re: **Pre-Assessment Consultation**
Preparation of Draft Environmental Assessment (DEA)
'Ewa Makai Middle School, 'Ewa, Oahu.

Dear Mr. Chang:

We are in receipt of the above referenced document (received May 30, 2007) and have no comments at this time. Thank you for the opportunity to be included in the pre-assessment consultation.

Sincerely,

Frank R. Hays,
Pacific Area Director

TAKE PRIDE IN AMERICA

SSFM INTERNATIONAL, INC.
501 Sumner Street, Suite 620
Honolulu, Hawaii 96817
Phone: (808) 531-1308
Fax: (808) 521-7348

Project Managers, Planners, & Engineers
American Council of Engineering Companies, Member

October 28, 2008

SSFM 2007_032.000

Mr. Frank R. Hays, Pacific Area Director
U.S. Department of the Interior
National Park Service
Pacific West Region
300 Ala Moana Boulevard, Box 50165
Suite 6-226
Honolulu, Hawai'i 96850-0053

Dear Mr. Hays:

Subject: 'Ewa Makai Middle School
TMK: 1-9-069:027
Pre-Assessment Comments, Draft Environmental Assessment
'Ewa, O'ahu, Hawai'i

Thank you for the letter dated May 30, 2007 (RE: H4217) providing pre-assessment consultation comments for the preparation of the Draft Environmental Assessment (Draft EA) for the subject project.

We note that your department has no comments at this time. A copy of the Draft EA will be provided when published.

If you have any questions on this matter, please give me a call at (808) 531-1308. Thank you.

Sincerely,

SSFM INTERNATIONAL, INC.

Jared K. Chang
Planner

DEPARTMENT OF FACILITY MAINTENANCE
CITY AND COUNTY OF HONOLULU
1000 Uluohia Street, Suite 215 Kapolei, Hawaii 96707
Phone (808) 692-5054 • Fax (808) 692-5857
Website www.honolulu.gov

MUFI HANNEMANN
MAYOR

LAVERNE HIGA, P.E.
DIRECTOR AND CHIEF ENGINEER

GEORGE "KEOKI" MIYAMOTO
DEPUTY DIRECTOR

SSFM INTERNATIONAL, INC.
RECEIVED
JUN 13 2007
FILE

IN REPLY REFER TO
07-518

FILE COPY

June 7, 2007

Mr. Jared K. Chang
SSFM International, Inc.
591 Sumner Street, Suite 620
Honolulu, Hawaii 96817

Dear Mr. Chang:

Subject: Ewa Makai Middle School
Pre-Assessment Consultation for Draft Environmental Assessment
Ewa, Oahu, Hawaii

Thank you for giving us the opportunity to comment on the pre-assessment consultation for the draft environmental assessment. We have no comments to offer at this time.

Please keep us informed as your project progresses.

Should you have any questions, please call Larry Leopardi, Chief of the Division of Road Maintenance, at 768-3600.

Sincerely,

Laverne Higa

Laverne Higa, P.E.
Director and Chief Engineer

LH:sm

SSFM INTERNATIONAL

SSFM INTERNATIONAL, INC.
501 Sumner Street, Suite 620
Honolulu, Hawaii 96817
Phone: (808) 531-1308
Fax: (808) 521-7348

Project Managers, Planners, & Engineers
American Council of Engineering Companies, Member

October 28, 2008

SSFM 2007_032.000

Mr. Craig Nishimura, P.E., Acting Director & Chief Engineer
Department of Facility Maintenance
City and County of Honolulu
1000 Uluohia Street, Suite 215
Kapolei, Hawai'i 96707

Dear Mr. Nishimura:

Subject: 'Ewa Makai Middle School
TMK: 1-9-069:027
Pre-Assessment Comments, Draft Environmental Assessment
'Ewa, O'ahu, Hawai'i

Thank you for the letter dated June 7, 2007 providing pre-assessment consultation comments for the preparation of the Draft Environmental Assessment (Draft EA) for the subject project.

We note that your department has no comments to offer at this time and you will be kept informed as project progresses. A copy of the Draft EA will be provided when published.

If you have any questions on this matter, please give me a call at (808) 531-1308. Thank you.

Sincerely,

SSFM INTERNATIONAL, INC.

Jared K. Chang
Planner

DEPARTMENT OF PARKS AND RECREATION
CITY AND COUNTY OF HONOLULU
1000 ULUOHIA STREET, SUITE 309 • KAPOLEI, HAWAII 96707
PHONE: (808) 692-5561 • FAX: 692-5131 • INTERNET: www.co.honolulu.hi.us

MUFI HANNEMANN
MAYOR

LESTER K. C. CHANG
DIRECTOR

DANA L. TAKAHARA-DIAS
DEPUTY DIRECTOR

SSFM INTERNATIONAL, INC.
RECEIVED
JUN 06 2007
JKC
FILE

June 5, 2007

FILE COPY

Mr. Jared K. Chang, Planner
SSFM International, Inc.
501 Sumner Street, Suite 620
Honolulu, Hawaii 96817

Dear Mr. Chang:

Subject: Ewa Makai Middle School
Pre-Assessment Consultation for Draft Environmental Assessment - Ewa, Oahu, Hawaii

Thank you for the opportunity to comment at the Pre-Assessment Consultation Stage of the Environmental Assessment relating to the State of Hawaii's proposed Ewa Makai Middle School Project.

The Department of Parks and Recreation has no comment and as the proposed project will not impact any program or facility of this department, you are invited to remove us as a consulted party from the balance of the EIS process.

Should you have any questions, please contact Mr. John Reid, Planner, at 692-5454.

Sincerely,

LESTER K. C. CHANG
Director

LKCC:mk
(211016)

SSFM INTERNATIONAL
INTERNATIONAL

SSFM INTERNATIONAL, INC.
501 Sumner Street, Suite 620
Honolulu, Hawaii 96817
Phone: (808) 531-1308
Fax: (808) 521-7348

Project Managers, Planners, & Engineers
American Council of Engineering Companies, Member

October 28, 2008

SSFM 2007_032.000

Mr. Lester K.C. Chang, Director
Department of Parks and Recreation
City and County of Honolulu
1000 Uluohia Street, Suite 309
Kapolei, Hawai'i 96707

Dear Mr. Chang:

Subject: 'Ewa Makai Middle School
TMK: 1-9-069:027
Pre-Assessment Comments, Draft Environmental Assessment
'Ewa, O'ahu, Hawai'i

Thank you for the letter dated June 5, 2007 providing pre-assessment consultation comments for the preparation of the Draft Environmental Assessment (Draft EA) for the subject project.

We note that your department has no comment and the proposed project will not impact any program or facility. At your request, we will remove your department from the balance of the Environmental Assessment process.

If you have any questions on this matter, please give me a call at (808) 531-1308. Thank you.

Sincerely,

SSFM INTERNATIONAL, INC.

Jared K. Chang
Planner

LINDA LINGLE
GOVERNOR OF HAWAII

STATE OF HAWAII
DEPARTMENT OF HEALTH
P.O. Box 3378
HONOLULU, HAWAII 96801-3378

SSFM INTERNATIONAL, INC.
RECEIVED
JUL 0 2 2007
FILE

CHIYOME L. FUKINO, M.D.
DIRECTOR OF HEALTH

In reply, please refer to:
EPO-07-122

FILE COPY

June 27, 2007

Mr. Jared K. Chang
SSFM International, Inc.
501 Sumner Street, Suite 620
Honolulu, Hawaii 96817

Dear Mr. Chang:

SUBJECT: Pre-Assessment Consultation for Ewa Makai Middle School
Ewa, Oahu, Hawaii
TMK: (1) 9-1-069: 005

Thank you for allowing us to review and comment on the subject application. The document was routed to the various branches of the Department of Health (DOH) Environmental Health Administration. We have the following Clean Water Branch, Hazard Evaluation & Emergency Response Office, and General comments.

Clean Water Branch

Please note that our review is based solely on the information provided in the subject document and its compliance with Hawaii Administrative Rules (HAR), Chapters 11-54 and 11-55. You may be responsible for fulfilling additional requirements related to our program. We recommend that you also read our standard comments on our website at http://www.hawaii.gov/health/environmental/env-planning/landuse/CWB-standardcomment.pdf.

1. Any project and its potential impacts to State waters must meet the following criteria:

   a. Anti-degradation policy (HAR, Section 11-54-1.1), which requires that the existing uses and the level of water quality necessary to protect the existing uses of the receiving State water be maintained and protected.

   b. Designated uses (HAR, Section 11-54-3), as determined by the classification of the receiving State waters.

   c. Water quality criteria (HAR, Sections 11-54-4 through 11-54-8).

2. Please call the Army Corps of Engineers at (808) 438-9258 to see if this project requires a Department of the Army (DA) permit. Permits may be required for work performed in, over,

and under navigable waters of the United States. Projects requiring a DA permit also require a Section 401 Water Quality Certification (WQC) from our office.

3. You are required to obtain a National Pollutant Discharge Elimination System (NPDES) permit for discharges of wastewater, including storm water runoff, into State surface waters (HAR, Chapter 11-55). For the following types of discharges into Class A or Class 2 State waters, you may apply for NPDES general permit coverage by submitting a Notice of Intent (NOI) form:

   a. Storm water associated with industrial activities, as defined in Title 40, Code of Federal Regulations, Sections 122.26(b)(14)(i) through 122.26(b)(14)(ix) and 122.26(b)(14)(xi)

   b. Storm water associated with construction activities, including clearing, grading, and excavation, that result in the disturbance of equal to or greater than one (1) acre of total land area. The total land area includes a contiguous area where multiple separate and distinct construction activities may be taking place at different times on different schedules under a larger common plan of development or sale. **An NPDES permit is required before the start of the construction activities.**

   c. Treated effluent from leaking underground storage tank remedial activities.

   d. Once through cooling water less than one (1) million gallons per day

   e. Hydro-testing water.

   f. Construction dewatering effluent.

   g. Treated effluent from well drilling activities

   h. Circulation water from decorative ponds or tanks

   You must submit a separate NOI form for each type of discharge at least 30 days prior to the start of the discharge activity, except when applying for coverage for discharges of storm water associated with construction activity. For this type of discharge, the NOI must be submitted 30 days before to the start of construction activities. The NOI forms may be picked up at our office or downloaded from our website at: http://www.hawaii.gov/health/environmental/water/cleanwater/forms/genl-index.html.

4. You must also submit a copy of the NOI or NPDES permit application to the State Department of Land and Natural Resources, State Historic Preservation Division (SHPD), or demonstrate to the satisfaction of the CWB that SHPD has or is in the process of evaluating

your project. Please submit a copy of your request for review by SHPD or SHPD's determination letter for the project along with your NOI or NPDES permit application, as applicable.

5. Please note that all discharges related to the project construction or operation activities, whether or not NPDES permit coverage and/or Section 401 WQC are required, must comply with the State's Water Quality Standards. Noncompliance with water quality requirements contained in HAR, Chapter 11-54, and/or permitting requirements, specified in HAR, Chapter 11-55, may be subject to penalties of $25,000 per day per violation.

If you have any questions, please visit our website at http://www.hawaii.gov/health/environmental/water/cleanwater/index.html, or contact the Engineering Section, CWB, at 586-4309.

Hazard Evaluation & Emergency Response Office (HEER)

Lands formerly used for sugarcane production are now being developed into communities where residential home, schools and commercial businesses are being constructed. Chemicals associated with the sugarcane industry persist in soils today and may be a threat to public health and the environment. The HEER Office has identified former sugarcane production areas for assessment throughout the state and plans to work with property owners to conduct environmental assessment to identify and address soil contaminants prior to finalizing development plans for the properties.

The parcel listed for the Ewa Makai Middle School project was used for sugarcane production and should be assessed for chemicals associated with the sugarcane industry. If contaminants are found at elevated levels, then additional assessment is needed to determine potential risks and the need for remedial action. Removal or remedial plans must comply with Chapter 128D, Environmental Response Law, HRS, and Title 11, Chapter 451, HAR, State Contingency Plan

If you have any questions please contact Laura Young at 586-4249

General

We strongly recommend that you review all of the Standard Comments on our website: www.state.hi.us/health/environmental/env-planning/landuse/landuse.html. Any comments specifically applicable to this project should be adhered to.

If there are any questions about these comments please contact Jiacai Liu with the Environmental Planning Office at 586-4346.

Sincerely,

KELVIN H. SUNADA, MANAGER
Environmental Planning Office

c: EPO
CWB
HEER

SSFM INTERNATIONAL, INC.
501 Sumner Street, Suite 620
Honolulu, Hawaii 96817
Phone: (808) 531-1308
Fax: (808) 521-7348

Project Managers, Planners, & Engineers
American Council of Engineering Companies, Member

October 28, 2008

SSFM 2007_032.000

Mr. Kelvin H. Sunada, Manager
State of Hawai'i
Department of Health
Environmental Planning Office
P.O. Box 3378
Honolulu, Hawai'i 96801

Dear Mr. Sunada:

Subject: 'Ewa Makai Middle Schoo
TMK: 1-9-069:027
Pre-Assessment Comments, Draft Environmental Assessment
'Ewa, O'ahu, Hawai'i

Thank you for the letter dated June 27, 2007 providing pre-assessment consultation comments for the preparation of the Draft Environmental Assessment (Draft EA) for the subject project.

Consultation with the Department of Army was conducted to identify and address project impacts to waters under their jurisdiction. The results will be included in the Draft EA. Any potential project impacts to State waters will be addressed to meet applicable criteria found in your Department's Administrative Rules.

NPDES permits and related permits will be identified and addressed in the Draft EA. A copy of the applicable NPDES permit application will be submitted to the State Historic Preservation Division for their review. Discharges associated with the project will comply with the applicable State Water Quality Standards under your Administrative Rules and requirements of Subsection 342D-50(1), HRS.

A Phase II Environmental Site Assessment (ESA) was conducted for this project site and will be discussed in the Draft EA. We have met with Hazard Evaluation and Emergency Response (HEER) Office staff to discuss the details and scoping of the Phase 2 ESA being completed for this project.

The Draft EA will include an adequate review of the standard comments provided via the Department of Health's website. As such, the proposed project will be designed in compliance with all applicable rules and regulations as promulgated by your Department's Administrative Rules. A copy of the Draft EA will be provided when published.

If you have any questions on this matter, please give me a call at (808) 531-1308. Thank you.

Sincerely,

SSFM INTERNATIONAL, INC.

Jared K. Chang
Planner

BOARD OF WATER SUPPLY

CITY AND COUNTY OF HONOLULU
630 SOUTH BERETANIA STREET
HONOLULU, HI 96843

SSFM INTERNATIONAL, INC
RECEIVED
JUN 22 2007
FILE

MUFI HANNEMANN, Mayor

RANDALL Y. S. CHUNG, Chairman
SAMUEL T. HATA
ALLY J. PARK
ROBERT K. CUNDIFF
MARC C. TILKER

LAVERNE T. HIGA, Ex-Officio
BARRY FUKUNAGA, Ex-Officio

CLIFFORD P. LUM
Manager and Chief Engineer

DEAN A. NAKANO
Deputy Manager and Chief Engineer

FILE COPY

June 20, 2007

Mr. Jared K. Chang, Planner
SSFM International, Incorporated
501 Sumner Street, Suite 620
Honolulu, Hawaii 96817

Dear Mr. Chang:

Subject: Your Letter of May 29, 2007 on the Draft Environmental Assessment
Pre-Assessment Consultation for Ewa Makai Middle School

Thank you for allowing us the opportunity to comment on the subject document.

The existing water system will be adequate to accommodate the proposed Ewa Makai Middle School when the proposed water system improvements on Kapolei Parkway are installed and placed in service. However, please be advised that this information is based upon current data and, therefore, the Board of Water Supply reserves the right to change any position or information stated herein up until the final approval of your building permit application. The final decision on the availability of water will be confirmed when the building permit application is submitted for approval.

When water is made available, the applicant will be required to pay our Water System Facilities Charges for resource development, transmission and daily storage.

The on-site fire protection requirements should be coordinated with the Fire Prevention Bureau of the Honolulu Fire Department.

Irrigation for the proposed middle school should be provided by the R-1 non-potable water system in the area.

The proposed project is subject to Board of Water Supply Cross-Connection Control and Backflow Prevention requirements prior to the issuance of the Building Permit.

If you have any questions, please contact Robert Chun at 748-5443.

Very truly yours,

for KEITH S. SHIDA
Principal Executive
Customer Care Division

Water for Life . Ka Wai Ola

SSFM INTERNATIONAL, INC.
501 Sumner Street, Suite 620
Honolulu, Hawaii 96817
Phone: (808) 531-1308
Fax: (808) 521-7348

Project Managers, Planners, & Engineers
American Council of Engineering Companies, Member

October 28, 2008

SSFM 2007_032.000

Mr. Keith S. Shida
Principal Executive
Customer Care Division
Board of Water Supply
City and County of Honolulu
630 South Beretania Street
Honolulu, Hawai'i 96843

Dear Mr. Shida:

Subject: 'Ewa Makai Middle School
TMK: 1-9-069:027
Pre-Assessment Comments, Draft Environmental Assessment
'Ewa, O'ahu, Hawai'i

Thank you for your letter dated June 20, 2007 regarding the pre-assessment consultation efforts for preparation of the Draft Environmental Assessment for the subject project.

We confirm your information that the existing water system is adequate to accommodate the proposed improvements. A water allocation will be obtained during the design phase of the project.

Design plans will be coordinated with your department for review and approval as part of ministerial permits required for this project. The applicant will also pay the required Water System Facilities Charges when water is made available. Your department's cross-connection control and backflow prevention requirements will be incorporated in the project's design.

The on-site fire protection requirements will be coordinated with the Fire Prevention Bureau for the Honolulu Fire Department. A copy of the Draft EA will be provided when published.

If you have any questions on this matter, please contact me at 531-1308. Thank you.

Sincerely,

SSFM INTERNATIONAL, INC.

Jared K. Chang
Planner

HONOLULU FIRE DEPARTMENT

CITY AND COUNTY OF HONOLULU

636 South Street
Honolulu, Hawaii 96813-5007
Phone: 808-723-7139 Fax: 808-723-7111 Internet: www.honolulu.gov/hfd

MUFI HANNEMANN
MAYOR

KENNETH G. SILVA
FIRE CHIEF

ALVIN K. TOMITA
DEPUTY FIRE CHIEF

SSFM INTERNATIONAL, INC.
RECEIVED
JUN 21 2007
JKC
FILE

June 14, 2007

Mr. Jared K. Chang, Planner
SSFM International, Inc.
501 Sumner Street, Suite 620
Honolulu, Hawaii 96817

Dear Mr. Chang:

Subject: Preassessment Consultation for Draft Environmental Assessment
Ewa Makai Middle School
Ewa, Oahu, Hawaii

In response to your letter dated May 29, 2007, regarding the above-mentioned subject, the Honolulu Fire Department (HFD) reviewed the material provided and requires that the following be complied with:

1. Provide a fire apparatus access road for every facility, building, or portion of a building hereafter constructed or moved into or within the jurisdiction when any portion of the facility or any portion of an exterior wall of the first story of the building is located more than 150 feet (45 720 mm) from a fire apparatus access road as measured by an approved route around the exterior of the building or facility. (1997 Uniform Fire Code, Section 902.2.1.)

2. Provide a water supply, approved by the county, capable of supplying required fire flow for fire protection to all premises upon which facilities or buildings, or portions thereof, are hereafter constructed or moved into or within the county.

   On-site fire hydrants and mains capable of supplying the required fire flow shall be provided when any portion of the facility or building is in excess of the 150 feet (45 720 mm) from a water supply on a fire apparatus access road, as measured by an approved route around the exterior of the facility or building. (1997 Uniform Fire Code, Section 903.2, as amended.)

3. Submit civil drawings to the HFD for review and approval.

Should you have any questions, please call Battalion Chief Lloyd Rogers of our Fire Prevention Bureau at 723-7151.

Sincerely,

KENNETH G. SILVA
Fire Chief

KGS/SK:bh

SSFM INTERNATIONAL

SSFM INTERNATIONAL, INC.
501 Sumner Street, Suite 620
Honolulu, Hawaii 96817
Phone: (808) 531-1308
Fax: (808) 521-7348

Project Managers, Planners, & Engineers
American Council of Engineering Companies, Member

October 28, 2008

SSFM 2007_032.000

Mr. Kenneth G. Silva, Chief
Honolulu Fire Department
City and County of Honolulu
636 South Street
Honolulu, Hawai'i 96813-5007

Dear Mr. Silva:

Subject: 'Ewa Makai Middle School
TMK: 1-9-069:027
Pre-Assessment Comments, Draft Environmental Assessment
'Ewa, O'ahu, Hawai'i

Thank you for your letter dated June 14, 2007 regarding the pre-assessment consultation efforts for preparation of the Draft Environmental Assessment for the subject project.

The school will have designated fire access lanes in accordance to City and County of Honolulu, Fire Department Standards and Uniform Fire Code. The fire access routes will encompass all building structures and be clearly marked with appropriate signage and markings.

Adequate water supply will be provided. The Honolulu Board of Water Supply has acknowledged the existing water system would be adequate to serve the proposed school. Fire Hydrants will be located on-site to meet the Honolulu Fire Departments 150-foot coverage requirement.

Furthermore, we appreciate your information on the Uniform Fire Code requirements for this type of project. Design plans will be coordinated with your department through the review process. A copy of the Draft EA will be provided when published.

If you have any questions on this matter, please contact me at 531-1308. Thank you.

Sincerely,

SSFM INTERNATIONAL, INC.

Jared K. Chang
Planner

LINDA LINGLE
GOVERNOR

STATE OF HAWAII
DEPARTMENT OF TRANSPORTATION
869 PUNCHBOWL STREET
HONOLULU, HAWAII 96813-5097

BARRY FUKUNAGA
DIRECTOR

Deputy Directors
FRANCIS PAUL KEENO
BRENNON T. MORIOKA
BRIAN H. SEKIGUCHI

IN REPLY REFER TO:

STP 8.2513

SSFM INTERNATIONAL, INC
RECEIVED
JUN 14 2007

FILE

FILE COPY

June 6, 2007

Mr. Jared K. Chang
SSFM International, Inc.
501 Sumner Street, Suite 620
Honolulu, Hawaii 96817

Dear Mr. Chang:

Subject: Pre-Assessment Consultation for a Draft Environmental Assessment
Ewa Makai Middle School, Oahu

Thank you for your notification on the subject proposed new public school.

The Ewa Region is experiencing significant growth from different development projects. The circulation around and traffic associated with the proposed school is a factor we are interested in for our analysis of the cumulative traffic impacts to our highways. A traffic assessment report (TIAR) should be provided in the Draft Environmental Assessment. The TIAR should reflect the designed enrollment and staffing for the school and to any future capacity of the school.

Also, the school can be affected by the aircraft operations from Kalaeloa Airport and Honolulu International Airport. Aircraft noise, flight tracks, proper construction of the school facilities and necessary notification of aircraft flights overhead should be covered in your Draft Environmental Assessment.

We request that at least four (4) copies of the Draft Environmental Assessment be provided for review by our departmental and divisional (highways and airports) staff.

We appreciate the courtesy of your consultation and for the opportunity to provide our initial comments.

Very truly yours,

BARRY FUKUNAGA
Director of Transportation

SSFM INTERNATIONAL

SSFM INTERNATIONAL, INC.
501 Sumner Street, Suite 620
Honolulu, Hawaii 96817
Phone: (808) 531-1308
Fax: (808) 521-7348

Project Managers, Planners, & Engineers
American Council of Engineering Companies, Member

October 28, 2008

SSFM 2007_032.000

Mr. Brennon T. Morioka, Director
State of Hawaii
Department of Transportation
869 Punchbowl Street
Honolulu, Hawai'i 96813-5097

Dear Mr. Morioka:

Subject: 'Ewa Makai Middle School
TMK: 1-9-069:027
Pre-Assessment Comments, Draft Environmental Assessment
'Ewa, O'ahu, Hawai'i

Thank you for the letter dated June 6, 2007 providing pre-assessment consultation comments for the preparation of the Draft Environmental Assessment (Draft EA) for the subject project.

Your interests in the traffic circulation around and associated with the proposed school will be addressed in the Draft Environmental Assessment. A traffic assessment report is being prepared for this project and will be included in the Draft EA. The TIAR document will include information on projected student enrollment associated with a previous Master Plan developed for this school. Traffic impacts would be more appropriately addressed when other facilities are programmed for implementation.

Noise impacts associated will be addressed in the Draft Environmental Assessment as suggested.

Four copies of the Draft EA will be provided when published. If you have any question on this matter, please call me 531-1308. Thank you.

Sincerely,

SSFM INTERNATIONAL, INC.

Jared K. Chang
Planner

THE GAS COMPANY

SSFM INTERNATIONAL, INC
RECEIVED
JUL 23 2007
jkc
FILE

P.O. Box 3000
Honolulu, Hawaii 96802-3000

FILE COPY

July 18, 2007

SSFM International, Inc.
501 Sumner Street, Suite 620
Honolulu, Hawaii 96817

Attention: Mr. Jared K. Chang

Subject: Draft Environmental Assessment
'Ewa Makai Middle School
Pre-Assessment Consultation for Draft Environmental Assessment
'Ewa, O'ahu, Hawai'i

Please be advised that The Gas Company, LLC maintains underground utility gas mains in the project vicinity, which serves commercial and residential customers in the area. We would appreciate your consideration during the project planning and design process to minimize any potential conflicts with the existing gas facilities in the project area.

Thank you for the opportunity to comment on the Draft Environmental Assessment. Should there be any questions, or if additional information is desired, please call Stason Nishimura at 594-5689.

Sincerely,

Charles E. Calvet, P.E.
Manager, Engineering

CEC.krs
07-147

SSFM INTERNATIONAL

SSFM INTERNATIONAL, INC.
501 Sumner Street, Suite 620
Honolulu, Hawaii 96817
Phone: (808) 531-1308
Fax: (808) 521-7348

Project Managers, Planners, & Engineers
American Council of Engineering Companies, Member

October 28, 2008

SSFM 2007_032.000

Mr. Charles E. Calvet, P.E.
Manager, Engineering
The Gas Company
P.O. Box 3000
Honolulu, Hawai'i 96802

Dear Mr. Calvet:

Subject: 'Ewa Makai Middle School
TMK: 1-9-069:027
Pre-Assessment Comments, Draft Environmental Assessment
'Ewa, O'ahu, Hawai'i

Thank you for the letter dated July 18, 2007 providing pre-assessment consultation comments for the preparation of the Draft Environmental Assessment (Draft EA) for the subject project.

Applicable issues pertaining to the subject project will be addressed in the Draft EA. A copy of the Draft EA will be provided when published.

If you have any questions on this matter, please give me a call at (808) 531-1308. Thank you.

Sincerely,

SSFM INTERNATIONAL, INC.

Jared K. Chang
Planner

LINDA LINGLE
GOVERNOR OF HAWAII

LAURA H. THIELEN
CHAIRPERSON
BOARD OF LAND AND NATURAL RESOURCES
COMMISSION ON WATER RESOURCE MANAGEMENT

STATE OF HAWAII
DEPARTMENT OF LAND AND NATURAL RESOURCES
LAND DIVISION

POST OFFICE BOX 621
HONOLULU, HAWAII 96809

SSFM INTERNATIONAL, INC.
RECEIVED
DEC 04 2008
jkc
FILE

FILE COPY

December 2, 2008

SSFM International, Inc.
501 Sumner Street Suite 620
Honolulu, Hawaii 96817

Attention: Mr. Jared Chang

Ladies and Gentlemen:

Subject: Ewa Makai Middle School

Thank you for the opportunity to review and comment on the subject matter. The Department of Land and Natural Resources' (DLNR), Land Division distributed or made available a copy of your report pertaining to the subject matter to DLNR Divisions for their review and comment.

Other than the comments from Division of Aquatic Resources, Engineering Division, Land Division, the Department of Land and Natural Resources has no other comments to offer on the subject matter. Should you have any questions, please feel free to call our office at 587-0433. Thank you.

Sincerely,

Charlene E. Unoki
for Morris M. Atta
Administrator

Cc: OEQC
DOE

1936

LINDA LINGLE
GOVERNOR OF HAWAII

LAURA H. THIELEN
CHAIRPERSON
BOARD OF LAND AND NATURAL RESOURCES
COMMISSION ON WATER RESOURCE MANAGEMENT

AMV
BDS

STATE OF HAWAII
DEPARTMENT OF LAND AND NATURAL RESOURCES
LAND DIVISION

POST OFFICE BOX 621
HONOLULU, HAWAII 96809

November 14, 2008

DEPT. OF LAND & NATURAL RESOURCES STATE OF HAWAII
2008 NOV 24 P 3:17
RECEIVED LAND DIVISION

MEMORANDUM

TO: **DLNR Agencies:**
x Div. of Aquatic Resources
__ ~~Div. of Boating & Ocean Recreation~~
x Engineering Division
__ Div. of Forestry & Wildlife
__ Div. of State Parks
__ Commission on Water Resource Management
__ Office of Conservation & Coastal Lands
x Land Division – Oahu District/Barbara Lee

FROM: for Morris M. Atta Charlene
SUBJECT: Draft environmental assessment for Ewa Makai Middle School
LOCATION: Ewa, Oahu, TMK: (1) 9-1-69:27
APPLICANT: SSFM International on behalf of Department of Education

Transmitted for your review and comment on the above referenced document. We would appreciate your comments on this document. Please submit any comments by December 1, 2008.

If no response is received by this date, we will assume your agency has no comments. If you have any questions about this request, please contact my office at 587-0433. Thank you.

Attachments

( ) We have no objections.
(X) We have no comments.
( ) Comments are attached.

Signed:
Date: 24 Nov. 2008

RECEIVED
NOV 14 2008
AQUATIC RESOURCES

LINDA LINGLE
GOVERNOR OF HAWAII

LAURA H. THIELEN
CHAIRPERSON
BOARD OF LAND AND NATURAL RESOURCES
COMMISSION ON WATER RESOURCE MANAGEMENT

STATE OF HAWAII
DEPARTMENT OF LAND AND NATURAL RESOURCES
LAND DIVISION

POST OFFICE BOX 621
HONOLULU, HAWAII 96809

November 14, 2008

MEMORANDUM

TO: **DLNR Agencies:**
x Div. of Aquatic Resources
__Div. of Boating & Ocean Recreation
x Engineering Division
__Div. of Forestry & Wildlife
__Div. of State Parks
__Commission on Water Resource Management
__Office of Conservation & Coastal Lands
x Land Division – Oahu District/Barbara Lee

FROM: for Morris M. Atta Charlene
SUBJECT: Draft environmental assessment for Ewa Makai Middle School
LOCATION: Ewa, Oahu, TMK: (1) 9-1-69:27
APPLICANT: SSFM International on behalf of Department of Education

Transmitted for your review and comment on the above referenced document. We would appreciate your comments on this document. Please submit any comments by December 1, 2008.

If no response is received by this date, we will assume your agency has no comments. If you have any questions about this request, please contact my office at 587-0433. Thank you.

Attachments

( ) We have no objections.
(X) We have no comments.
( ) Comments are attached.

Signed: Timothy Chee
Date: November 17, 2008

LINDA LINGLE
GOVERNOR OF HAWAII

LAURA H. THIELEN
CHAIRPERSON
BOARD OF LAND AND NATURAL RESOURCES
COMMISSION ON WATER RESOURCE MANAGEMENT

STATE OF HAWAII
DEPARTMENT OF LAND AND NATURAL RESOURCES
LAND DIVISION

POST OFFICE BOX 621
HONOLULU, HAWAII 96809

November 14, 2008

RECEIVED
LAND DIVISION
2008 NOV 25 A 9:13
DEPT. OF LAND &
NATURAL RESOURCES
STATE OF HAWAII

MEMORANDUM

TO: **DLNR Agencies:**
x Div. of Aquatic Resources
__Div. of Boating & Ocean Recreation
x Engineering Division
__Div. of Forestry & Wildlife
__Div. of State Parks
__Commission on Water Resource Management
__Office of Conservation & Coastal Lands
x Land Division – Oahu District/Barbara Lee

FROM: for Morris M. Atta Charlene
SUBJECT: Draft environmental assessment for Ewa Makai Middle School
LOCATION: Ewa, Oahu, TMK: (1) 9-1-69:27
APPLICANT: SSFM International on behalf of Department of Education

Transmitted for your review and comment on the above referenced document. We would appreciate your comments on this document. Please submit any comments by December 1, 2008.

If no response is received by this date, we will assume your agency has no comments. If you have any questions about this request, please contact my office at 587-0433. Thank you.

Attachments

( ) We have no objections.
( ) We have no comments.
(X) Comments are attached.

Signed: Cori T. Ofuina
Date: 11/24/08

'08 NOV 17 AM 10:41 ENGINEERING

DEPARTMENT OF LAND AND NATURAL RESOURCES
ENGINEERING DIVISION

LD\MorrisAtta
REF.: DEAEwaMakaiMiddleSchool
Oahu. 652

COMMENTS

(X) We confirm that the project site, according to the Flood Insurance Rate Map (FIRM), is located in Zone D. The Flood Insurance Program does not have any regulations for developments within Zone D.

( ) Please take note that the project site, according to the Flood Insurance Rate Map (FIRM), is located in Zone.

( ) Please note that the correct Flood Zone Designation for the project site according to the Flood Insurance Rate Map (FIRM) is ___.

( ) Please note that the project must comply with the rules and regulations of the National Flood Insurance Program (NFIP) presented in Title 44 of the Code of Federal Regulations (44CFR), whenever development within a Special Flood Hazard Area is undertaken. If there are any questions, please contact the State NFIP Coordinator, Ms. Carol Tyau-Beam, of the Department of Land and Natural Resources, Engineering Division at (808) 587-0267.

Please be advised that 44CFR indicates the minimum standards set forth by the NFIP. Your Community's local flood ordinance may prove to be more restrictive and thus take precedence over the minimum NFIP standards. If there are questions regarding the local flood ordinances, please contact the applicable County NFIP Coordinators below:

( ) Mr. Robert Sumitomo at (808) 768-8097 or Mr. Mario Siu Li at (808) 768-8098 of the City and County of Honolulu, Department of Planning and Permitting.
( ) Mr. Kelly Gomes at (808) 961-8327 (Hilo) or Mr. Kiran Emler at (808) 327-3530 (Kona) of the County of Hawaii, Department of Public Works.
( ) Mr. Francis Cerizo at (808) 270-7771 of the County of Maui, Department of Planning.
( ) Mr. Mario Antonio at (808) 241-6620 of the County of Kauai, Department of Public Works.

(X) The applicant should include water demands and infrastructure required to meet project needs. Please note that projects within State lands requiring water service from the Honolulu Board of Water Supply system will be required to pay a resource development charge, in addition to Water Facilities Charges for transmission and daily storage.

(X) The applicant should provide the water demands and calculations to the Engineering Division so it can be included in the State Water Projects Plan Update.

( ) Additional Comments:_____

( ) Other: _____

Should you have any questions, please call Ms. Suzie S. Agraan of the Planning Branch at 587-0258.

Signed: _____
ERIC T. HIRANO, CHIEF ENGINEER

Date: 11/24/08

LINDA LINGLE
GOVERNOR

PATRICIA HAMAMOTO
SUPERINTENDENT

STATE OF HAWAI'I
DEPARTMENT OF EDUCATION
P.O. BOX 2360
HONOLULU, HAWAI'I 96804

OFFICE OF SCHOOL FACILITIES AND SUPPORT SERVICES

[redacted]

December 9, 2008

TO: Mr. Morris M. Atta, Administrator
Land Division
Department of Land and Natural Resources

FROM: Duane Y. Kashiwai, Public Works Administrator
Facilities Development Branch
Department of Education

SUBJECT: Ewa Makai Middle School
TMK: (1) 9-1-069: 027, Ewa, Oahu, Hawaii
Response to Comments on Draft Environmental Assessment

Thank you for the letter dated December 2, 2008 providing consultation comments on the Draft Environmental Assessment (Draft EA) for the subject project. We appreciate your efforts in distributing the Draft EA for review by the other Department of Land and Natural Resources' (DLNR) divisions.

We note comments have been submitted to you by the Division of Aquatic Resources, Engineering Division, and Land Division. Other than these comments, your department has no further comment on the subject project. Our responses to each division's comments are incorporated in this letter.

Engineering Division

In response to this division's November 24, 2008 memorandum, we acknowledge their confirmation that the project site is located within Flood Zone D in accordance with the Flood Insurance Rate Maps.

Water demands and required infrastructure improvements have been included in the water facilities section of the Final EA (Chapter 5.1). We note that projects within state lands which require service from Honolulu Board of Water Supply will trigger a resource development charge, in addition to Water Facilities Charges for transmission and daily storage.

Water demand calculations for the proposed school facility will be provided to the Engineering Division so that they can incorporate project information into the State Water Projects Plan Update.

Division of Aquatic Resources

We note this division has no comment on this project.

Land Division – Oahu District

We note this division has no comments on this project.

If you have any questions on this matter, please contact Mr. Benjamin Miura at 586-0429. Thank you.

DYK:jl

c: Jared K. Chang, SSFM

AN AFFIRMATIVE ACTION AND EQUAL OPPORTUNITY EMPLOYER

LINDA LINGLE
GOVERNOR

RUSS K. SAITO
COMPTROLLER

BARBARA A. ANNIS
DEPUTY COMPTROLLER

(P)1373.8

STATE OF HAWAII
DEPARTMENT OF ACCOUNTING AND GENERAL SERVICES
P.O. BOX 119, HONOLULU, HAWAII 96810

NOV 21 2008

RECEIVED
NOV 24 2008
jkc

FILE COPY

Mr. Jared K. Chang, Planner
SSFM International, Inc.
501 Sumner Street, Suite 620
Honolulu, Hawaii 96817

Dear Mr. Chang:

Subject: Ewa Makai Middle School
Draft Environmental Assessment
Ewa, Oahu, Hawaii, TMK 1-9-1-069:027

Thank you for your November 8, 2008 letter. This project does not directly impact any of the Department of Accounting and General Services' projects or existing facilities, and we have no comments to offer at this time.

If you have any questions, please have your staff call Mr. Bruce Bennett of the Planning Branch at 586-0491.

Sincerely,

ERNEST Y. W. LAU
Public Works Administrator

BB:vca
c: Ms. Katherine Puana Kealoha, DOH-OEQC
Mr. Benjamin Miura, DOE

LINDA LINGLE
GOVERNOR

PATRICIA HAMAMOTO
SUPERINTENDENT

STATE OF HAWAI'I
DEPARTMENT OF EDUCATION
P.O. BOX 2360
HONOLULU, HAWAI'I 96804

OFFICE OF SCHOOL FACILITIES AND SUPPORT SERVICES

[redacted]

December 9, 2008

TO: Mr. Russ K. Saito, Comptroller
Department of Accounting and General Services

FROM: Duane Y. Kashiwai, Public Works Administrator
Facilities Development Branch
Department of Education

SUBJECT: Ewa Makai Middle School
TMK: (1) 9-1-069: 027, Ewa, Oahu, Hawai'i
Response to Comments on Draft Environmental Assessment

Thank you for your letter dated November 21, 2008 providing consultation comments on the Draft Environmental Assessment (Draft EA) for the subject project.

We confirm that this project will not directly impact any of Department of Accounting and General Services' existing facilities or projects and note you have no further comments to offer at this time.

If you have any questions on this matter, please contact Mr. Benjamin Miura at 586-0429.
Thank you.

DYK:jl

c: Jared K. Chang, SSFM

PHONE MEMO TO FILE

DATE: November 12, 2008

FROM: Cathy

TO: Jared Chang

SUBJECT: 'Ewa Makai Middle School – Draft EA Comments

Received phone call from State Civil Defense office, Cathy (didn't give last name) to comment on the Draft EA.

Cathy indicated that they have "**no comments on this project.**"

LINDA LINGLE
GOVERNOR

PATRICIA HAMAMOTO
SUPERINTENDENT

STATE OF HAWAI'I
DEPARTMENT OF EDUCATION
P.O. BOX 2360
HONOLULU, HAWAI'I 96804

OFFICE OF SCHOOL FACILITIES AND SUPPORT SERVICES
[redacted]

December 9, 2009

TO: Major General Robert Lee
State Civil Defense Division
Department of Defense

FROM: Duane Y. Kashiwai, Public Works Administrator
Facilities Development Branch
Department of Education

SUBJECT: Ewa Makai Middle School
TMK: (1) 9-1-069: 027, Ewa, Oahu, Hawaii
Response to Comments on Draft Environmental Assessment

Thank you for the telephone call on November 12, 2008 in response to the Draft Environmental Assessment (Draft EA) for the subject project.

We note that your department has no comments on the project.

If you have any questions on this matter, please contact Mr. Benjamin Miura at 586-0429.
Thank you

DYK:jl

c: Jared K. Chang, SSFM

DEPARTMENT OF FACILITY MAINTENANCE

CITY AND COUNTY OF HONOLULU

1000 Uluohia Street, Suite 215, Kapolei, Hawaii 96707
Phone: (808) 768-3343 • Fax: (808) 768 -3381
Website: www.honolulu.gov

MUFI HANNEMANN
MAYOR

CRAIG I. NISHIMURA, P.E.
DIRECTOR AND CHIEF ENGINEER

GEORGE "KEOKI" MIYAMOTO
DEPUTY DIRECTOR

SSFM INTERNATIONAL, INC.
RECEIVED
DEC 05 2008
JKC

IN REPLY REFER TO:
DRM 08-1091

December 3, 2008

FILE

FILE COPY

Mr. Jared Chang
SSFM International, Inc.
501 Sumner Street, Suite 620
Honolulu, Hawaii 96817

Dear Mr. Chang:

Subject: Draft Environmental Assessment (DEA)
Ewa Makai Middle School

Thank you for the opportunity to review and comment on the DEA dated November 2008, for the proposed subject new middle school for the Ewa community.

The majority of the proposed improvements will be located within future State-owned property and will have negligible impact on our facilities and operations. It is our understanding that the on-site project roadways, parking areas, drainage system and other roadway improvements within the school property shall be State-owned and maintained and will not be dedicated to the City.

Any associated improvements within adjacent City roadway right-of-ways should be constructed in accordance with the City and County of Honolulu Standard Details.

Should you have any questions, please call Charles Pignataro of the Division of Road Maintenance, at 768-3697.

Sincerely,

Craig I. Nishimura, P.E.
Director and Chief Engineer

c: Department of Education, State of Hawaii
(Attention Mr. Benjamin Miura)

LINDA LINGLE
GOVERNOR

PATRICIA HAMAMOTO
SUPERINTENDENT

STATE OF HAWAI'I
DEPARTMENT OF EDUCATION
P.O. BOX 2360
HONOLULU, HAWAI'I 96804

OFFICE OF SCHOOL FACILITIES AND SUPPORT SERVICES
[redacted]

December 9, 2008

Mr. Craig I. Nishimura, P.E., Director and Chief Engineer
Department of Facility Maintenance
City and County of Honolulu
1000 Uluohia Street, Suite 215
Kapolei, Hawaii 96707

Dear Mr. Nishimura:

Thank you for the letter dated December 3, 2008 providing consultation comments on the Draft Environmental Assessment (Draft EA) for the proposed Ewa Makai Middle School, TMK: (1) 9-1-069: 027, in Ewa, Oahu, Hawaii.

We note your determination the proposed school facility would have a negligible impact on your facilities and operations because the proposed improvements will be located within future state-owned lands. We confirm that the on-site project roadways, parking areas, drainage system and other roadway improvements within the school property will be state-owned and maintained.

Furthermore, associated roadway improvements within adjacent City and County of Honolulu roadway right-of-ways will be constructed in accordance with City and County of Honolulu Standard Details.

If you have any questions on this matter, please contact Mr. Benjamin Miura at 586-0429.

Sincerely yours,

Duane Y. Kashiwai
Public Works Administrator

DYK:jl

c: Jared K. Chang, SSFM

AN AFFIRMATIVE ACTION AND EQUAL OPPORTUNITY EMPLOYER

HONOLULU FIRE DEPARTMENT

CITY AND COUNTY OF HONOLULU

636 South Street
Honolulu, Hawaii 96813-5007
Phone: 808-723-7139 Fax: 808-723-7111 Internet: www.honolulu.gov/hfd

MUFI HANNEMANN
MAYOR

KENNETH G. SILVA
FIRE CHIEF

ALVIN K. TOMITA
DEPUTY FIRE CHIEF

SSFM INTERNATIONAL, INC.
RECEIVED
NOV 26 2008
JKC
FILE
FILE COPY

November 21, 2008

Mr. Jared Chang, Planner
SSFM International, Inc.
501 Sumner Street, Suite 620
Honolulu, Hawaii 96817

Dear Mr. Chang:

Subject: Draft Environmental Assessment for Ewa Makai Middle School

In response to your letter dated November 8, 2008, regarding the above-mentioned subject, the Honolulu Fire Department (HFD) reviewed the material provided and requires that the following be complied with:

1. Provide a fire apparatus access road for every facility, building, or portion of a building hereafter constructed or moved into or within the jurisdiction when any portion of the facility or any portion of an exterior wall of the first story of the building is located more than 150 feet (45 720 mm) from fire apparatus access road as measured by an approved route around the exterior of the building or facility. (1997 Uniform Fire Code, Section 902.2.1.)

2. Provide a water supply, approved by the county, capable of supplying the required fire flow for fire protection to all premises upon which facilities or buildings, or portions thereof, are hereafter constructed or moved into or within the county.

   On-site fire hydrants and mains capable of supplying the required fire flow shall be provided when any portion of the facility or building is in excess of 150 feet (45 720 mm) from a water supply on a fire apparatus access road, as measured by an approved route around the exterior of the facility or building. (1997 Uniform Fire Code, Section 903.2, as amended.)

3. Submit civil drawings to the HFD for review and approval.

Should you have any questions, please call Battalion Chief Socrates Bratakos of our Fire Prevention Bureau at 723-7151.

Sincerely,

KENNETH G. SILVA
Fire Chief

KGS/SY:jl

cc: Benjamin Miura, State Department of Education

LINDA LINGLE
GOVERNOR

PATRICIA HAMAMOTO
SUPERINTENDENT

STATE OF HAWAI'I
DEPARTMENT OF EDUCATION
P.O. BOX 2360
HONOLULU, HAWAI'I 96804

OFFICE OF SCHOOL FACILITIES AND SUPPORT SERVICES
[redacted]

December 9, 2008

Mr. Kenneth G. Silva, Fire Chief
Honolulu Fire Department
City and County of Honolulu
636 South Street
Honolulu, Hawaii 96813-5007

Dear Mr. Silva:

Thank you for the letter dated November 21, 2008 providing consultation comments on the Draft Environmental Assessment (Draft EA) for the proposed Ewa Makai Middle School, TMK: (1) 9-1-069: 027, in Ewa, Oahu, Hawaii. We would like to note the comments provided in this letter are identical to those provided in your pre-assessment consultation response dated June 14, 2007. Those comments were responded to and included in the published Draft EA. We note the new contact person from your department has changed from Battalion Chief Lloyd Rogers to Battalion Chief Socrates Bratakos.

The school will have designated fire access lanes in accordance to City and County of Honolulu, Fire Department Standards and Uniform Fire Code. The fire access routes will encompass all building structures and be clearly marked with appropriate signage and markings.

Adequate water supply will be provided to the proposed school. The Honolulu Board of Water Supply has acknowledged the existing water system would be adequate to serve the proposed school. Fire Hydrants will be located on-site to meet the Honolulu Fire Department's 150-foot coverage requirement.

Furthermore, we appreciate your information on the Uniform Fire Code requirements for this type of project. Design plans will be coordinated with your Department through the review process.

If you have any questions on this matter, please contact Mr. Benjamin Miura at 586-0429.

Sincerely yours,

Duane Y. Kashiwai
Public Works Administrator

DYK:jl

c: Jared K. Chang, SSFM

AN AFFIRMATIVE ACTION AND EQUAL OPPORTUNITY EMPLOYER

DEPARTMENT OF DESIGN AND CONSTRUCTION
CITY AND COUNTY OF HONOLULU
650 SOUTH KING STREET, 11TH FLOOR
HONOLULU, HAWAII 96813
Phone: (808) 768-8480 • Fax: (808) 523-4567
Web site: www.honolulu.gov

MUFI HANNEMANN
MAYOR

EUGENE C. LEE, P.E.
DIRECTOR

RUSSELL H. TAKARA, P.E.
DEPUTY DIRECTOR

SSFM INTERNATIONAL, INC.
RECEIVED
NOV 26 2008
jkc
FILE COPY
FILE

November 25, 2008

Mr. Jared K. Chang, Planner
SSFM International, Inc.
501 Sumner Street, Suite 620
Honolulu, Hawaii 96817

Dear Mr. Chang:

Subject: Draft Environmental Assessment
Ewa Makai Middle School
TMK: 1-9-1-069:027

Thank you for giving us the opportunity to review the above Draft Environmental Assessment.

The Department of Design and Construction does not have any comments to offer at this time.

Very truly yours,

Eugene C. Lee, P.E.
Director

ECL:lt (286895)

LINDA LINGLE
GOVERNOR

PATRICIA HAMAMOTO
SUPERINTENDENT

STATE OF HAWAI'I
DEPARTMENT OF EDUCATION
P.O. BOX 2360
HONOLULU, HAWAI'I 96804

OFFICE OF SCHOOL FACILITIES AND SUPPORT SERVICES

[redacted]

December 9, 2008

Mr. Eugene C. Lee, P.E.
Department of Design and Construction
City and County of Honolulu
650 South King Street, 11th Floor
Honolulu, Hawaii 96813

Dear Mr. Lee:

Thank you for the letter dated November 25, 2008 providing consultation comments on the Draft Environmental Assessment (Draft EA) for the proposed Ewa Makai Middle School, TMK: (1) 9-1-069: 027, in Ewa, Oahu, Hawaii.

We confirm that your department does not have any comments to offer at this time.

If you have any questions on this matter, please contact Mr. Benjamin Miura at 586-0429. Thank you.

Sincerely yours,

Duane Y. Kashiwai
Public Works Administrator

DYK:jl

c: Jared K. Chang, SSFM

AN AFFIRMATIVE ACTION AND EQUAL OPPORTUNITY EMPLOYER

BOARD OF WATER SUPPLY

CITY AND COUNTY OF HONOLULU
630 SOUTH BERETANIA STREET
HONOLULU, HI 96843

November 17, 2008

SSFM INTERNATIONAL INC
RECEIVED
NOV 19 2008
jke
FILE

MUFI HANNEMANN, Mayor

RANDALL Y. S. CHUNG, Chairman
SAMUEL T. HATA
ALLY J. PARK
ROBERT K. CUNDIFF
MARC C. TILKER

CRAIG I. NISHIMURA, Ex-Officio
BRENNON T. MORIOKA, Ex-Officio

CLIFFORD P. LUM
Manager and Chief Engineer

DEAN A. NAKANO
Deputy Manager and Chief Engineer

FILE COPY

Mr. Jared K. Chang, Planner
SSFM International, Incorporated
501 Sumner Street, Suite 620
Honolulu, Hawaii 96817

Dear Mr. Chang:

Subject: Your Letter Dated November 8, 2008 on the Draft Environmental Assessment for Ewa Makai Middle School, TMK: 9-1-069:027

Thank you for the opportunity to comment on the proposed project.

The existing water system is presently adequate to accommodate the proposed development. However, please be advised that this information is based upon current data and, therefore, the Board of Water Supply reserves the right to change any position or information stated herein up until the final approval of your building permit application. The final decision on the availability of water will be confirmed when the building permit application is submitted for approval.

When water is made available, the applicant will be required to pay our Water System Facilities Charges for resource development, transmission and daily storage.

The on-site fire protection requirement should be coordinated with the Fire Prevention Bureau of the Honolulu Fire Department.

Irrigation for the proposed middle school should be provided by the R-1 non-potable water system in the area.

The project is subject to Board of Water Supply Cross-Connection Control and Backflow Prevention requirements prior to the issuance of the building permit.

If you have any questions, please contact Robert Chun at 748-5443.

Very truly yours,

KEITH S. SHIDA
Program Administrator
Customer Care Division

cc: Mr. Benjamin Miura, Department of Education

Water for Life . . . Ka Wai Ola

LINDA LINGLE
GOVERNOR

PATRICIA HAMAMOTO
SUPERINTENDENT

STATE OF HAWAI'I
DEPARTMENT OF EDUCATION
P.O. BOX 2360
HONOLULU, HAWAI'I 96804

OFFICE OF SCHOOL FACILITIES AND SUPPORT SERVICES
[redacted]

December 9, 2008

Mr. Keith S. Shida, Program Administrator
Board of Water Supply
City and County of Honolulu
630 South Beretania St.
Honolulu, Hawaii 96843

Dear Mr. Shida:

Thank you for the letter dated November 17, 2008 providing comments on the Draft Environmental Assessment (Draft EA) for the proposed Ewa Makai Middle School, TMK: (1) 9-1-069: 027, in Ewa, Oahu, Hawaii.

We would like to note that your comments provided in this letter are identical to those provided in your pre-assessment consultation response dated June 20, 2007. Those comments were responded to and included in the Draft EA.

We note your determination that the existing water system can adequately accommodate the proposed Ewa Makai Middle School. The State Department of Education will pay applicable Water System Facility Charges for resource development, transmission, and daily storage. The on-site fire protection requirements have been coordinated with the Fire Prevention Bureau of the Honolulu Fire Department.

As discussed in Section 5.1 of the Draft EA, non-potable water facilities will be provided for the proposed school. Your department's Cross-Connection Control and Backflow Prevention requirements have been included in the projects water system design.

If you have any questions on this matter, please contact Mr. Benjamin Miura at 586-0429.

Sincerely yours,

Duane Y. Kashiwai
Public Works Administrator

DYK:jl

c: Jared K. Chang, SSFM

AN AFFIRMATIVE ACTION AND EQUAL OPPORTUNITY EMPLOYER

DEPARTMENT OF COMMUNITY SERVICES
CITY AND COUNTY OF HONOLULU
715 SOUTH KING STREET, SUITE 311 ● HONOLULU, HAWAII 96813 ● AREA CODE 808 ● PHONE: 768-7762 ● FAX: 768-7792

MUFI HANNEMANN
MAYOR

DEBORAH KIM MORIKAWA
DIRECTOR

ERNEST Y. MARTIN
DEPUTY DIRECTOR

SSFM INTERNATIONAL, INC.
RECEIVED
DEC 08 2008
jkc
FILE

FILE COPY

December 04, 2008

Mr. Jared Chang
SSFM International, Inc.
501 Sumner Street, Suite 620
Honolulu, Hawaii 96817

Dear Mr. Chang:

Subject: Draft Environmental Assessment (Draft EA) for the `Ewa Makai Middle School, TMK: (1) 9-1-069:027

Thank you for the opportunity to review and comment on the Draft EA for the `Ewa Makai Middle School proposed by the State of Hawaii's Department of Education. The proposed new middle school will help address the need for the additional schools and classroom space in the Leeward District as the school enrollment has risen to over 40,000 students. It will specifically serve approximately 1,050 sixth to eighth grade students.

We have reviewed this Draft EA and have determined that the subject project will have no negative impact on the projects and programs of the Department of Community Services. We believe the new middle school will be a welcome addition to the `Ewa community for the City sponsored housing developments in the `Ewa region.

Thank you for providing us the opportunity to comment on this Draft EA.

Sincerely,

Deborah Kim Morikawa
Director

DKM:sk

Cc. Mr. Benjamin Miura
State of Hawaii
Department of Education

LINDA LINGLE
GOVERNOR

PATRICIA HAMAMOTO
SUPERINTENDENT

STATE OF HAWAI'I
DEPARTMENT OF EDUCATION
P.O. BOX 2360
HONOLULU, HAWAI'I 96804

OFFICE OF SCHOOL FACILITIES AND SUPPORT SERVICES

December 9, 2008

Ms. Deborah Kim Morikawa, Director
Department of Community Services
City and County of Honolulu
715 South King Street, Suite 311
Honolulu, Hawaii 96813

Dear Ms. Morikawa:

Thank you for the letter dated December 4, 2008 providing consultation comments on the Draft Environmental Assessment (Draft EA) for the proposed Ewa Makai Middle School, TMK: (1) 9-1-069: 027, in Ewa, Oahu, Hawaii.

We note your department has determined the subject project will have no negative impact on the projects and programs of the City and County of Honolulu's Department of Community Services.

If you have any questions on this matter, please contact Benjamin Miura at 586-0429.

Sincerely yours,

Duane Y. Kashiwai
Public Works Administrator

DYK:jl

c: Jared K. Chang, SSFM

AN AFFIRMATIVE ACTION AND EQUAL OPPORTUNITY EMPLOYER

DEPARTMENT OF PLANNING AND PERMITTING
CITY AND COUNTY OF HONOLULU
650 SOUTH KING STREET, 7TH FLOOR • HONOLULU, HAWAII 96813
TELEPHONE: (808) 768-8000 • FAX: (808) 527-6743
INTERNET: www.honolulu.gov • DEPT. WEB SITE: www.honoluludpp.org

MUFI HANNEMANN
MAYOR

SSFM INTERNATIONAL, INC.
RECEIVED
DEC 09 2008
JKC

HENRY ENG, FAICP
DIRECTOR
DAVID K. TANOUE
DEPUTY DIRECTOR

FILE COPY

2008/ELOG-2743 (TH)

FILE

December 8, 2008

Mr. Jared Chang, Planner
SSFM International, Inc.
501 Sumner Street, Suite 620
Honolulu, Hawaii 96817

Dear Mr. Chang:

Subject: Draft Environmental Assessment (DEA) for the Ewa Makai Middle School, Tax Map Key: 1-9-1069:027

We have reviewed the subject DEA and offer the following comments.

1. Completion of the proposed middle school will satisfy Condition 5 of the Unilateral Agreement attached to Ordinance 04-08, approved on April 7, 2008.

2. Proposed improvements to the wastewater system to serve the Gentry Ewa Makai development are adequate to satisfy the wastewater requirements for the new middle school.

3. The FEA should mention whether the new middle school will serve as a possible emergency evacuation center. If so, will the buildings be designed with the proper structural integrity to serve as an emergency shelter?

4. The last paragraph on Page 24 of the DEA should be revised to cite the complete title of Department of Planning and Permitting's "Rules Relating to Storm Drainage Standards," January 2000.

5. The DEA's Site Plan identified as Figure 2.2 shows the middle school's parking lot encroaching into the drainage easement along the northern boundary of the property. If the parking lot is to encroach into the drainage easement, then the applicant will be required to obtain a variance from our department.

6. Section 3.2 (Page 24) of the DEA includes a brief discussion regarding earthquake hazards. However, the last paragraph on Page 24 and the first paragraph on Page 25 discuss earthquake hazard mitigation in a section that discusses hurricane hazards. This discussion seems to be misplaced and should be moved up and included in the discussion relating to earthquakes.

Thank you for the opportunity to comment on this matter. Should you have any questions, please contact Tim Hata of our staff at 768-8043.

Very truly yours,

Henry Eng, FAICP, Director
Department of Planning and Permitting

HE:js

p:/DivFunction/EA-EIS/2008/2008elog2743.doc

LINDA LINGLE
GOVERNOR

PATRICIA HAMAMOTO
SUPERINTENDENT

STATE OF HAWAI'I
DEPARTMENT OF EDUCATION
P.O. BOX 2360
HONOLULU, HAWAI'I 96804

OFFICE OF SCHOOL FACILITIES AND SUPPORT SERVICES

[redacted]

December 9, 2008

Mr. Henry Eng, FAICP, Director
Department of Planning and Permitting
City and County of Honolulu
650 South King Street, 7th Floor
Honolulu, Hawaii 96813

Dear Mr. Eng:

Thank you for the letter dated December 8, 2008, providing consultation on the Draft Environmental Assessment (Draft EA) for the proposed Ewa Makai Middle School, TMK: (1) 9-1-069: 027, in Ewa, Oahu, Hawaii. We offer the following responses to the comments received from your department:

1. We note the completion of the proposed middle school will satisfy Condition 5 of the unilateral agreement attached to Ordinance 04-08, approved on April 7, 2008.

2. We note the proposed wastewater system improvements planned for the Gentry Ewa Makai development is adequate to serve the new middle school.

3. The proposed middle school will not be designed to serve as a formal emergency shelter. The State Civil Defense Division evaluates the need for Department of Education facilities to serve as informal shelters and we will be pursuing their determination for this school site. In addition, the school building will be designed in accordance with City building code requirements minimizing its susceptibility to structural damage from natural disasters. Furthermore, the proposed middle school will be provided with an emergency generator connector switch and the location for a generator will be provided near the loading dock.

4. Section 3.2 has been revised to include the complete title of Department of Planning and Permitting's "Rules Relating to Storm Drainage Standards," January 2000.

5. If necessary, a variance approval will be sought from your department for the drainage easement encroachment.

6. The discussion on earthquake hazard mitigation found in Section 3.2 has been revised as recommended.

If you have any questions on this matter, please contact Benjamin Miura at 586-0429.

Very truly yours,

Duane Y. Kashiwai, Public Works Administrator
Facilities Development Branch

DYK:jl

c: Jared K. Chang, SSFM

AN AFFIRMATIVE ACTION AND EQUAL OPPORTUNITY EMPLOYER

DEPARTMENT OF TRANSPORTATION SERVICES

CITY AND COUNTY OF HONOLULU

650 SOUTH KING STREET, 3RD FLOOR
HONOLULU, HAWAII 96813
Phone: (808) 768-8305 • Fax: (808) 523-4730 • Internet: www.honolulu.gov

MUFI HANNEMANN
MAYOR

WAYNE Y. YOSHIOKA
DIRECTOR

RICHARD F. TORRES
DEPUTY DIRECTOR

SSFM INTERNATIONAL, INC
RECEIVED
DEC 0 9 2008
FILE

TP11/08-287131R

December 9, 2008

FILE COPY

Mr. Jared Chang
SSFM International, Inc.
501 Sumner Street, Suite 620
Honolulu, Hawaii 96817

Dear Mr. Chang:

Subject: Ewa Makai Middle School Draft Environmental Assessment

This is in response to your letter of November 8, 2008, requesting our review of the Draft Environmental Assessment for the Ewa Makai Middle School project. We offer the following comments:

1. According to our Public Transit Division, (PTD), when completed, the Kapolei Parkway is slated to become a significant part of our public transit network. The final environmental assessment (FEA) should discuss public transit improvements to the Kapolei Parkway fronting the planned school. These improvements would include bus shelters, sidewalk improvements to accommodate transit, possible bus pullouts, and any other bus operation considerations. These improvements should be submitted for review and approval by the Department of Transportation Services, Public Transit Division.

2. Another PTD concern is with the high density of existing and planned residential developments near the school, we anticipate high pedestrian traffic in the area. Pedestrian safety improvements to the Kapolei Parkway and adjacent roadways should be extensively analyzed and discussed in the FEA.

3. A third PTD concern is the location of the building should facilitate campus mobility by persons with disabilities. We recommend that the FEA incorporate a vehicular access zone for the student drop-off areas that is ADA accessible to facilitate ingress/egress by TheHandi-Van vehicles.

4. Our Transportation Planning Division is concerned that the Traffic Impact Assessment (TIA) report only analyzes the traffic conditions to the year 2010. This time horizon is only one year away and build-out of the school would not occur within this time horizon. We recommend that the FEA re-assess traffic conditions on the Kapolei Parkway and surrounding street network to the anticipated total completion (build-out) year of the school. This would provide us with a better assessment of traffic conditions on the roadway network when the school is in "full operation."

5. Our Traffic Engineering Division (TED) recommends that the FEA be revised to state that the Kapolei Parkway will *eventually* provide vehicular access to the communities of Kapolei, Villages of Kapolei, Ewa Villages, Ewa by Gentry, and Ewa Beach on page 44. It is not yet a continuous roadway. Also, on page 44 the FEA should identify the traffic controls for Kaioli Street.

6. TED agrees that traffic signals should be installed at the intersection of Kapolei Parkway and Keaunui Drive before construction is completed. Also, the FEA should establish a school route plan and identify appropriate traffic safety controls to be installed along the route prior to the opening of the school.

7. On pages 45 and 46, the DEA asserts that the State Department of Transportation should determine when a signal will be warranted and monitor traffic volume growth along with the City. TED recommends this should be revised since the State has no jurisdiction on the roadways in question.

8. In Appendix E, Figure 2, TED recommends that the number of parking stalls be noted on the site plan. Also, on page 6, the FEA should reflect the current roadway conditions of the Kapolei Parkway. It is not currently striped for 3 cross-sectional lanes in each direction throughout the vicinity of the project site. On page 19, the State DOT should be removed as will not be involved in a signal warrant study. Chapter 5.1.2 should reflect that the entrance driveway at the Kapolei Parkway should be closed.

9. Finally, TED confirms that the intersections of Kapolei Parkway with Keanui Drive and Keoneula Boulevard should be signalized, as stated in Appendix E Chapter 5.2.2. The FEA needs to identify traffic safety controls that should be installed at other intersections along the Kapolei Parkway to create a Safe Route to School.

Should you have any questions on the matter, please contact Mr. Brian Suzuki at 768-8349.

Very truly yours,

WAYNE Y. YOSHIOKA
Director

LINDA LINGLE
GOVERNOR

PATRICIA HAMAMOTO
SUPERINTENDENT

STATE OF HAWAI'I
DEPARTMENT OF EDUCATION
P.O. BOX 2360
HONOLULU, HAWAI'I 96804

OFFICE OF SCHOOL FACILITIES AND SUPPORT SERVICES
[redacted]

December 9, 2008

Mr. Wayne Y. Yoshioka, Director
Department of Transportation Services
City and County of Honolulu
650 South King Street, 3rd Floor
Honolulu, Hawaii 96813

Dear Mr. Yoshioka:

Thank you for the letter dated December 9, 2008, providing consultation on the Draft Environmental Assessment (Draft EA) for the proposed Ewa Makai Middle School, TMK: (1) 9-1-069: 027, in Ewa, Oahu, Hawaii. We offer the following responses to the comments received from your department:

1. We acknowledge Kapolei Parkway's significance as part of the City's public transit network. Currently, the subject project does not include plans for public transit improvements fronting the proposed middle school. If the needs for future public transit improvements are established, then plans will be submitted to your department's Public Transit Division for review and approval.

2. We recognize there is a need for pedestrian safety due to the high density of residential land uses in the project's vicinity. The proposed middle school is situated within the Ewa by Gentry - Makai Development which consists of single-family and multi-family homes, planned open spaces, community facilities and some commercial development. A discussion of pedestrian safety improvements in-place or planned for Kapolei Parkway has been incorporated into the Final EA, Section 5.5, Transportation Facilities.

3. As discussed in the project description, there are two vehicular student drop-off zones planned for the proposed school and both zones will comply with ADA guidelines and design requirements. These areas will be able to accommodate the ingress/egress by TheHandi-Van vehicles or other vehicles for persons with disabilities. All walkways to access the school site, as well as within the school, are also planned to comply with ADA guidelines and design requirements.

4. While the school's construction is still slated to begin in 2009, we acknowledge the possibility of needing to re-adjust the construction completion year from 2010 to 2011. Full build-out of the school is expected to be completed by late 2011. We believe that a re-assessment of the traffic conditions on Kapolei Parkway and the surrounding street network is unlikely to change the recommendations provided by this TIA report or affect the recommendations discussed in separate traffic studies conducted for the Ewa by Gentry – Makai Development and Ocean Pointe Development. As discussed in the Draft EA, the school-related traffic added to the surrounding street network at full build-out of the project (in and of itself) is not anticipated to create any

significant traffic congestion or problems. This was based on a comparison of traffic volumes for the morning and afternoon peak hours with and without the school in place but included the background traffic growth due to the Ewa by Gentry – Makai and Ocean Pointe projects. In addition, the mitigations recommended by the TIA report are not expected to change with adding one year to the build-out schedule for the proposed school.

5. We appreciate your recommendations and have incorporated them into the Final EA. A discussion of traffic controls for Kaioli Street has been added to Transportation Facilities, Section 5.5 of the Final EA.

6. Recommendations for the establishment of a school route plan are included in both the Draft EA and Final EA. At this stage, a school route plan has not been programmed with the development of the proposed school; however we will consider the applicability and need for this plan at a more appropriate time.

7. The State Department of Transportation component has been removed from determining the need for a signal warrant study associated with this project since jurisdiction of Kapolei Parkway falls under the City.

8. Per your recommendations with regards to the Traffic Impact Assessment (TIA) report, we offer the following revisions:
   - noted the numbers of parking stalls on the site plan (Fig. 2);
   - revised the description of Kapolei Parkway from six cross-sectional lanes to five cross-sectional lanes to reflect current conditions; and
   - removed State DOT component in determining signal warrant study needs.

9. We acknowledge your confirmation for signalization at the intersections of Kapolei Parkway with Keanui Drive and with Keoneula Boulevard. This determination is consistent with the recommendations of the Draft EA, as well as the traffic studies conducted for the Ewa by Gentry and Ocean Pointe projects. Should the need for traffic safety controls at other intersections arise in the future, we would be glad to coordinate those plans with your department for review and approval.

If you have any questions on this matter, please contact Benjamin Miura at 586-0429. Thank you.

Sincerely yours,

Duane Y. Kashiwai, Public Works Administrator
Facilities and Support Services Branch

DYK:jl

c: Jared K. Chang, SSFM

Jared Chang

From: Sen. Will Espero [senespero@Capitol.hawaii.gov]
Sent: Monday, December 08, 2008 4:54 PM
To: Jared Chang
Subject: LTR.doc
Attachments: editdata.mso

December 8, 2008

SSFM International, Inc.
501 Sumner Street, Suite 620
Honolulu, Hawaii 96817

Dear Mr. Chang,

I am writing this letter to support the construction of Ewa Makai Middle School as soon as possible. As you know, our district is the fastest growing area on Oahu, and existing schools are already over capacity. Ilima Intermediate needs relief, and the construction of Ewa Makai Middle School will be a great benefit for Ewa residents.

The community has worked with the DOE to make this school the best middle school in the state. The design with the educational programming in mind is outstanding, and the LEED designation which it will attain will make the school energy efficient.

I understand funding may fall short at the moment due to unforeseen economic factors, but this should not stop the beginning of the construction phase. I will do everything in my power to help the DOE to secure additional funding.

Please make certain this project continues to move forward and reach completion by 2010 or 2011.

Respectfully,

Will Espero

Will Espero
State Senator

LINDA LINGLE
GOVERNOR

PATRICIA HAMAMOTO
SUPERINTENDENT

STATE OF HAWAI'I
DEPARTMENT OF EDUCATION
P.O. BOX 2360
HONOLULU, HAWAI'I 96804

OFFICE OF SCHOOL FACILITIES AND SUPPORT SERVICES

[redacted]

December 9, 2008

The Honorable Will Espero
Senator, 20th Senate District
State Capitol, Room 207
Honolulu, Hawaii 96813

Dear Senator Espero:

Thank you for the letter (email) received on December 8, 2008, providing consultation on the Draft Environmental Assessment (Draft EA) for the proposed Ewa Makai Middle School, TMK: (1) 9-1-069: 027, in Ewa, Oahu, Hawaii.

We would like to acknowledge your continued efforts and are truly grateful for your encouraging support of this proposed middle school.

If you have any questions on this matter, please contact Benjamin Miura at 586-0429. Thank you.

Sincerely yours,

Duane Y. Kashiwai
Public Works Administrator

DYK:jl

c: Jared K. Chang, SSFM

AN AFFIRMATIVE ACTION AND EQUAL OPPORTUNITY EMPLOYER

Hawaiian Telcom

SSFM INTERNATIONAL, INC.
RECEIVED
NOV 18 2008
JKC

FILE COPY
FILE

November 14, 2008

SSFM International
501 Sumner Street, Suite 620
Honolulu, Hawaii 96817
Attention: Mr. Jared Chang, Planner

Dear Mr. Chang:

Subject: **Draft Environmental Assessment for the Ewa Makai Middle School**

Thank you for the opportunity to review and comment on the subject project in preparation of the Environmental Assessment.

Hawaiian Telcom does not have any comments to offer at this time. Please continue to include us during the design stages of the project.

If you have any questions or require assistance in the future on this project, please call Les Loo at 546-7761.

Sincerely,

Lynette Yoshida
Section Manager - OSP Engineering
Network Engineering & Planning

cc: Mr. Benjamin Miura - DOE
File [Soda Creek]

1177 Bishop Street • Honolulu • Hi 96813

LINDA LINGLE
GOVERNOR

PATRICIA HAMAMOTO
SUPERINTENDENT

STATE OF HAWAI'I
DEPARTMENT OF EDUCATION
P.O. BOX 2360
HONOLULU, HAWAI'I 96804

OFFICE OF SCHOOL FACILITIES AND SUPPORT SERVICES
[redacted]

December 9, 2008

Ms. Lynette Yoshida
Section Manager, OSP Engineering
Network Engineering and Planning
Hawaiian Telcom
1177 Bishop St.
Honolulu, Hawaii 96813

Dear Ms. Yoshida:

Thank you for the letter dated November 14, 2008 providing consultation comments on the Draft Environmental Assessment (Draft EA) for the proposed Ewa Makai Middle School, TMK: (1) 9-1-069: 027, in Ewa, Oahu, Hawaii.

We note that your company does not have any comments on the project.

If you have any questions on this matter, please contact Mr. Benjamin Miura at 586-0429.

Sincerely yours,

Duane Y. Kashiwai
Public Works Administrator

DYK:jl

c: Jared K. Chang, SSFM

EWA MAKAI MIDDLE SCHOOL

Creating the School of Tomorrow

"DYNAMIC"

"PERFORMANCE"

"COMMUNITY"

DESIGN CHARETTE

Final Report – June 2005

For the Department of Education ♦ **By Mitsunaga & Associates, Inc. and The Orcutt/Winslow Partnership**

TABLE OF CONTENTS

EXECUTIVE SUMMARY
Ewa Makai Middle School - "The School of Tomorrow" 1
Community Based Design 2

COMMUNITY DESIGN PROCESS SUMMARY
Community-Based Design 3
The Task Force 3
The Steering Committee 3
The Student Representatives 3
The Start of the Visioning Process 3
Characteristics of Middle Schoolers 3

EWA MAKAI MIDDLE SCHOOL'S VISION & GUIDING PRINCIPLES
Vision 4
Mission 4
Guiding Principles 4
Design Themes 5
Curricular Emphases 5
The Charette Process 5

PROGRAM PLANNING
Planning Requirements 7
Background 7
Project Site, Location & Vicinity Map 7
Program Requirements 7
Noise Control 7
Vehicular Access 7
Parking 8
Loading 8
Security 8

CHARETTE ONE
The Objective-Learning Strategies and Site Concepts and Group Activities 9
Site Concepts 10
Visual Front/Physical Front 10
Parking & Drop-Off 10
Playing Fields 10
Building Concepts 11
Kinds of Buildings 11
Support Facilities 11
Curriculum 11
Technology Access Throughout 11
The Ideas and Aha's 12

CHARETTE TWO
The Objective-Building and Site Development 13
Day One - Discuss Learning Styles and Presentation of Various Schemes - A, B, C, D, E, F, H, I & J 13
Day Two - Presentation of Consolidated Schemes - A, B, & C 14
Day Three - Refine Plan 15
Day Four - Refine Plan 15
Day Five - Present Refined Plan 15
Charette Two Design Results Summary 16

CHARETTE THREE
Day One - Group Review of Plan 17
Day Two - Revision of Plan 17
Day Three - Presentation of Final Plan 17
Final Design Concepts
Civil Plan 18
Grading and Drainage 18
Water/Wastewater 18
Roadways 18
Landscape Plan 18
Design Approach 18
Plan Features 18
Entry Plaza 18
Amphitheater 18
Classroom Courtyards 18
Architectural Plan 19
Siting 19
Historic Ewa Plantation Style 19
Diversity, Comfort, Safety & Security 19
Structural Plan 20
Foundation and Floor Slab 20
Floor 20
Walls and Columns 20
Roof 20
Mechanical Plan 20
Fire Sprinklers 20
Air Conditioning 20
Plumbing System 20
Electrical Plan 20
Electrical System 20
Technology Infrastructure 20
Telephone System 21

Cable Television System 21
Exterior Lighting 21
Interior Lighting 21
Fire Alarm System 21
Conceptual Design Summary 21
Civil Plan 21
Landscape Plan 22
Architectural Plan 22
Structural Plan 22
Mechanical Plan 23
Electrical Plan 23
Cost Estimates 23

CONCEPTUAL DESIGN
Site Plan 24
Overall Building Plan 25
Neighborhood Plan 26
Administration/Media Center Plan 27
Electives Wing Plan 28
Roof Plan 29
Exterior Elevations 30
Project Character Sketch 31
School Entrance Sketch 32
Main Commons/Dining Area Sketch 33
Neighborhood Commons Sketch 34
Outdoor Amphitheater Sketch 35

IN CONCLUSION
What's Next for the School of Tomorrow
The Design Process Continues 36
The Challenge 36
Imagine 36

ACKNOWLEDGEMENTS
Task Force, The Steering Committee. Hasegko Representative, Gentry Representative, DAGS/DOE, The Orcutt Winslow Partnership, Mitsunaga & Associates, Inc., Other Teachers, Community and Students 37

APPENDICES

DOE FADS Schedule A-1

Comparison of FADS and Proposed Space Allocations A-16

Basis For Designs
Civil A-26
Landscape A-31
Architectural A-32
Structural A-35
Mechanical A-36
Electrical A-41
Charette Session Notes
Charette One
Day 1 - March 14, 2005 ..... A-45
Day 2 - March 15, 2005 ..... A-49
Day 3 - March 16, 2005 ..... A-54
Day 4 - March 17, 2005 ..... A-56
Day 5 - March 18, 2005 ..... A-57
Exhibits - Notes A-58
Charette Two
Day 1 - April 11, 2005 ..... A-82
Day 2 - April 12, 2005 ..... A-86
Day 3 - April 13, 2005 ..... A-88
Day 4 - April 14, 2005 ..... A-90
Day 5 - April 15, 2005 ..... A-92
Exhibits - Notes A-93

Charette Three
Day 1 - May 9, 2005 ..... A-123
Day 2 - May 10, 2005 ..... A-124
Day 3 - May 11, 2005 ..... A-125

Agency Correspondence A-135

Statement of Probable Costs A-136

Ewa Makai Middle School Educational Plan A-137

EXECUTIVE SUMMARY

Ewa Makai Middle School – The School of Tomorrow

In early 2005, a task force was formed to assist in developing an educational plan to be used as guidance during the design charette for this new middle school in Ewa Region. This task force formulated a very unique educational plan that focused on exploration which specifically supports the three areas of environmental studies, performing arts, and health and fitness.

In addition, because of the involvement of the students, parents, teachers, and others in the community, the design of the school was guided by their beliefs and values. The program developed by the community drove the design of the school, allowing form to follow function.

"When you drive pass this school, don't look at it as just a building. It is much more than that. Every nook and cranny has been thoughtfully designed to enhance and support the education of children who enter it's door.
--Anne Greseth-Kim

Located in Ewa, one of Oahu's fastest growing communities, the school will serve 1,050 sixth to eighth grade students. It was designed to accommodate a year round multi-track schedule, provide flexibility in the use of classroom spaces, use financial and facility resources cost effectively, utilize sustainable design criteria, and provide a nurturing and exciting academic environment.

An Island School for the Future
Shaped by the vision of the community, Ewa Makai Middle School will emphasize an exploratory curriculum as an integral part of the vision of the school. The design of the school will provide opportunities for grouping of students into different teams or learning clusters. The design of the school shall support the three specialty focus areas of environmental studies, performing arts, and health and fitness.

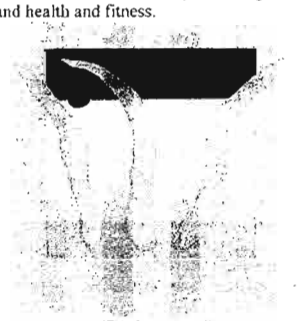

"Performance"

With these focus areas in mind, the design of the school has very special features such as:

- An indoor dining facility is incorporated into the design which will also serve as a multi-functional performance area. This indoor performance area will also open up to an outside performance amphitheater which supports the curriculum direction for Ewa Makai Middle School.
- Secure outdoor learning gardens are provided in the design and located with direct access from the science classrooms and adjacent to the clusters of other core classrooms. The arrangement supports the environmental studies focus area.
- A cluster of classrooms that foster interdisciplinary teaching that also "break" out into interior commons spaces. These classrooms have movable walls to create flexible learning environments. The arrangement will house three classrooms for core subjects, a science classroom and adjacent resource classrooms.
- A specialty classroom wing that houses all the specialty classrooms such as music, art, technology, family and consumer science, dance and performance and health and fitness.
- A virtual reality room is incorporated into the design plans as a way to look towards the future. Holographic projections will eventually enliven the classroom. History, for example, will not seem so "outdated." How much more significant great men and women

become when students can see and hear them.

- A library media center, with library and computer facilities, was located to serve parent and students' needs.
- State-of-the art technology will be provided throughout the school, and internet linkage will enable students to access worldwide communication networks.
- The administration area has been separated into administration functions and student center for support services. This will give students an ease of access for student activities.
- The entire building is designed with the "Shopping Mall" concept in mind. Staff and students both expressed a strong desire for a safe, indoor, and nurturing environment. This environment needs to have a variety of spaces to explore and learn from.
- The building, containing more than 150,000 s.f. with 52 classrooms, has been designed with a rich indoor feeling that encourages exploration and performance. The spaces make students feel comfortable, safe and nurtured.
- The exterior architectural style has been inspired by the plantation villages of Ewa.
- The community's efforts in designing the school have generated a deep sense of ownership and pride. This is likely to spread, as others in the community share in the cultural, technological, and recreational resources of the school.

"No limitations, no restraints, freedom, flexibility, capabilities, brainstorm, expand, synergy, creativity, personality, virtual reality, holograms ....Whew!!!! How exciting!! Can't wait to see the dream come true and be able to touch, hold, see, utilize the ideas that one time floated in our heads."
--Ari Caracol

The final charette meeting held on May 11, 2005 presented a uniquely designed one-building school. The feeling that the design invoked to the community was a safe, exciting, and nurturing school. The design supports the educational plan.

Community-Based Design
At the outset in early 2005, the Department of Education (DOE) formed a Task Force to represent the community, in exploring ideas for the school, to develop an education plan, and to prepare for the upcoming design charette.

An educational plan was formulated and was used to guide the design charette.

A steering committee was formed to represent the various stakeholders and be decision makers for the charette.

Participants and on-lookers also included representatives from the DOE, Department of Accounting and General Services (DAGS), nearby developers, the community, parents, and students.

Three design charettes was comprised of three sessions on March 15 – 18th., April 11 – 15th., and May 9 – 11th, 2005. This report provides a summary of the charette sessions and the resultant conceptual plans. The design program, basis for design, detailed notes, and FADS tradeoff comparisons are included as appendices.

This book is provided as both a history of the process and also to be used as an owner's manual in how to use this school. Every aspect of the design of the school has been based on sound educational principles and decisions made by the steering committee.

COMMUNITY DESIGN PROCESS SUMMARY

COMMUNITY-BASED DESIGN

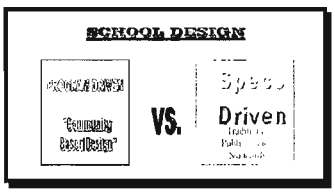

The Task Force
The Task Force was a group of DOE staff; teachers, administrators, and representatives of developers; representatives from the community; parents; students; and organizations who share an interest in the design and direction of the school.

The Steering Committee
The Steering Committee consisted of 11 Task Force members who committed to participate in the design charette process full-time. They were responsible for representing the Task Force in making all the design decisions throughout the charette sessions. Also joining the steering committee during the charette sessions were various members of the Department of Education, Department of Accounting and General Services, community business representatives and community organizations.

The Student Representatives
A group of students from the Campbell complex area provided input on desired learning environments. Students the provided review and comment as ideas were considered for incorporation into the final design.

The Start of the Visioning Process
In the three months prior to the charette the Task Force conducted meetings to develop a vision and educational plan. A common understanding of the needs of adolescents and key educational concepts that would guide the design of the school was formulated.

Characteristics of Middle School Students

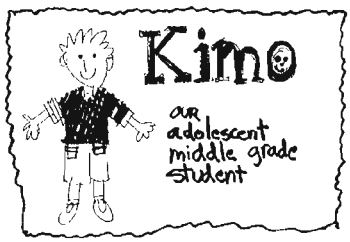

Middle school students were characterized as follows:
Emotional Characteristics
- Self conscious
- Easily embarrassed
- Catty – most fights occur at 7th grade
- Hold grudges
- Do not like the spotlight
- Feel safe with a group
- Helpful
- Want to feel love
- Very emotional

Social Characteristics
- Friends are important
- Form cliques
- Act silly to mature
- Start to distance themselves from parents
- Affected by trends and fads
- Lots of peer pressure
- Like to talk

What the Students Want
The students identified the following as desirable attributes of a middle school:
- School should be all enclosed and air-conditioned
- Places to socialize and eat.
- Computer access
- Places that clubs can gather and meet.
- Ease of access to counselors and a safe and confidential place.
- Performance areas.
- Student store that can sell things and food
- Game rooms
- Vending machines
- More choices such as students can pick the foods to eat
- A green house
- A swimming pool and water slide
- Clean building
- Sound proof rooms
- Fewer exits and more security
- Places for lockers and storage
- Student activity room

- Places to rest and furniture such as bean bags
- Variety of activities
- Places are designed to make it easier for students to learn
- Hands-on activities
- Fitness center
- Homely feeling in the school

This information focused the groups' attention on adolescents and led to further developments in the school environment that would meet their unique academic, social and emotional needs

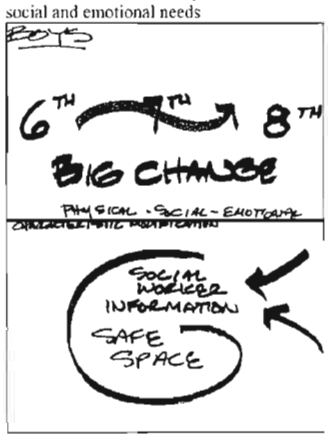

EWA MAKAI MIDDLE SCHOOL'S VISION AND GUIDING PRINCIPLES

Vision
The Ewa Makai Middle School's vision and guiding principles were developed by the task force and guided the steering committee during the design

Ewa Makai Middle School's Vision

"Ewa Makai Middle School - where learners are inspired to explore"

This statement guided the theme of the design. The resulting school provides countless areas of exploration space.

The Mission
Together we will:
1. Cultivate a safe, nurturing and rich environment through interactive partnerships and symbiotic relationships
2. Engage in a dynamic, responsive curriculum to produce life-long learners
3. Unify a sense of community pride by fostering partnerships through the community
4. Be receptive to technological advancements while encouraging the growth of positive, productive citizens.

Guiding Principles and General Instructional Needs

Educational concepts and general instructional needs including the following:

- Elements of middle school education and the changing needs of adolescents.
- Need for smaller learning communities within the middle school environment.
- School will support teaming within grade levels and provide the flexibility to cluster teams.
- Curriculum can be delivered through a variety of instructional strategies and group settings.
- Provide relevant learning opportunities through hands-on, activity based experiences.
- Flexibility through clustering of spaces and use of operable walls.
- Provisions to support multi-track schedule.
- Provide an exploratory curriculum.
- Inclusion for special education students.
- Provide an exploratory curriculum focusing on three specialty focus areas – environmental studies, performing arts, and health and fitness.
- Provide a student center and counseling to support the middle school student.
- Involve the community.
- Connection of administration to the school.
- Importance of the Library/Resource Center.
- Incorporate the student dining area as a performance area.
- Inclusion of the outdoor areas as part of the learning experience.
- Providing safety and security of staff.

These principles served as an important reference to the steering committee turned as the design of the school progressed.

Design Themes
The guiding principles also led to the development of design themes, which are listed below.

- Provides an environment in which students and staff feel safe.
- Provides a rich variety of learning environments
- Provides a dynamic and flexible learning environment that will allow team and interdisciplinary teaching
- Is a sustainable school and is environmentally friendly.
- Connections to the outside environment from classrooms

Curricular Emphases
While the school would offer its students a full range of options, the Task Force wanted the school to be known for the education it provided in three specialty curriculum focus areas:
- Environmental Studies
- Performing Arts
- Health and Fitness

The school features a multitude of informal performance areas, environmental friendly learning gardens, sustainable design concepts, and indoor and outdoor areas for health and fitness. With these curricular emphases students will be ready to take their place in the everyday world.

The Charette Process

The charette process consisted of a series of intense, brainstorming, project design sessions in which all appropriate groups came together. The process facilitated and accelerated communication and decision-making, and provided the opportunity for significant input by more people than the traditional design process allows.

The design charette for Ewa Makai Middle School was scheduled in three sessions, held over a two month period from March 2005 till early May 2005. During this time, the steering committee translated the ideas and themes, developed by the Task Force, into the physical design of the school. Each charette session focused on a different aspect of the design.

Charette One – March 14 -18, 2005
- Day one: Learning strategies and processes
- Day Two: Student characteristics and space implications
- Day Three: Understanding the FADS and social patterns and structures
- Day Four: Site constraints and alternative diagrams and discussion of the educational elements in relation to the FADS,
- Day Five: Discussion on alternative site plan diagrams in relation to teaching and learning strategies

Charette Two – April 11 – 14, 2005
- Day One: Re-discussion on learning styles and how they relate to the building, formulation of alternative plan diagrams on the site.
- Day Two: Presentation of various site development schemes, and various design element spaces of the building.
- Day Three: Review of specific needs and refinement of the floor plan
- Day Four: Input from the students and refinement of the plans
- Day Five: Presentation of site plan, floor plans and 3D character of various interior spaces.

Charette Three – May 9 – 11, 2005
- Day One: Review of floor plan and spaces and exterior elevations
- Day Two: Presentation of revised floor plan and spaces
- Day Three: Final presentation of the conceptual plan

At the end of the final charette session, the steering committee presented the conceptual design of the school to the task force, community-at-large, and State

representatives from both the Senate and House.

During the session, the Orcutt/Winslow Partnership served as facilitators for the process (For purposes of this document, they are identified as facilitators). They guided the steering committee in making informed decisions that shaped the design of the school, and ensured coherency between the Committee's educational plan and the design for the school.

In conjunction with the charette, architects from Mitsunaga & Associates, Inc. transformed the steering committee's decisions and concepts into physical spaces and forms (For purposes of this document, they are identified as architects). Each day, work developed during the sessions were compiled and interpreted into design drawings and concepts. This enabled the committee to make on-going decisions and revisions to the function, placement, and look of the school. Floor plans, elevations, a 3-D model, and renderings were completed for review.

The final product resulted in a cohesive conceptual design that represented the community's vision for the school.

Una explaining her group's concept

Paul Winslow- "I guarantee you that tour buses will come to your school to see it"

Tony Chun explaining his group's concept

Working on the schemes

The students

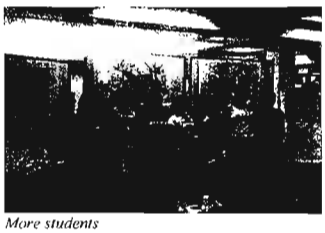

More students

PROGRAM PLANNING

PLANNING REQUIREMENTS

A a public school, Ewa Makai Middle School was planned in accordance with specifications for planning, design, and construction. An initial FADS program was provided to the consultants. As an essential part of the design charette process, Mitsunaga & Associates, Inc. conducted a technical analysis of the State's program requirements for the school. During the charette sessions, these program requirements were incorporated with the community's ideas for Ewa Makai Middle School to produce the conceptual design and revised program requirements and schedules.

Among the program requirements evaluated and summarized in this section are vehicular access, noise control, parking and security. Included in the Appendices are the DOE Facilities Assessment and Development Schedule (FADS), a comparison of the FADS and proposed space allocations for Ewa Makai Middle School.

Background
The proposed Ewa Makai Middle School will be able to accommodate large enrollments, provide flexibility in the use of classroom spaces, and use financial and facility resources effectively.

The school was planned for a design enrollment of 1,050 students with the capability of servicing 1,400 students through the use of year round multi-track schedule. (During any given school session in the year three out of four tracks would occupy the school facility).

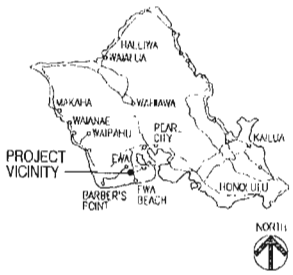

Vicinity Map

Vicinity Map

The students will come from the surrounding Campbell High School complex, within the DOE's Leeward District. According to the DOE, school enrollment in the Leeward District was 31,449 students in 1993 and has grown to over 40,000 students presently. The rapid development in the Ewa-Kapolei area has created a pressing need for additional schools and classroom space.

The project site is within the Gentry development of Ewa Makai. The site is bounded on the east by the as yet un-constructed portion of Kapolei Parkway. Gentry is planning a residential development to the north, and bordering the site to the west is open space set aside as a regional drainage way. Haseko's Ocean Pointe development is to the south.

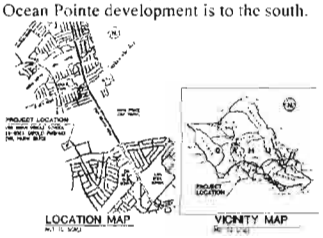

PROGRAM REQUIREMENTS

Noise Control
The design evolved into a single building where acoustical separation is important. This single structure will help mitigate sound transmission from the school to the surrounding community. The playfields are located to the west of the school building, adjacent to the regional drainage way.

Vehicular Access
Two driveways will provide access to the site. The main driveway will lead into the site directly from the intersection of Kapolei Parkway and Keaumui Drive. This driveway will lead to a student drop-off/pick-up zone, a staff and visitor parking area, and a service area for the cafeteria. The second driveway is from Kapolei Parkway and limited to right-in and right-out movement. This will be primarily used for staff parking and for buses.

Parking
The criteria for the City & County of Honolulu's Land Use Ordinance (LUO) call for 1 stall per 20 students of design capacity and 1 stall per 400 s.f. of office space. The LUO requires that the number of students be based on the Uniform Building Code's Table of Occupant Load Factor (from Table 10-A, 1 student per every 20 s.f. of classrooms and 1 per 50 s.f. of school shops and vocational rooms.) Therefore although the DOE's design capacity for the school is 1,050, per the LUO the required number of stalls would be
2946 Occupant (Classrooms)/20 - 147 stalls
17,662 s.f. (Office)/400 = 44 stalls
Total Stalls Required per LUO – 191

Loading
Loading requirements include bus loading and unloading, student drop-off areas, and service loading zones. DOE requested space to load 8 buses for the new school. City & County of Honolulu requires that the loading, unloading and stacking of vehicles be accomplished within the campus.

Students are often dropped off and picked up by their parents and the accommodation of an efficient student drop-off zone is required within the campus, separate from the bus loading. In addition, service vehicles must have convenient access to the school's administration and cafeteria facilities and adequate trash pickup sites be appropriately situated within the campus.

Security
The public's health, general welfare and safety on campus are concerns for all DOE facilities. Security and safety systems should be provided for day and potential night time use of the campus facilities. Ground floor windows must be specified with intermediate mullions or security grilles. Other means of deterring break-ins may be included in the building design when necessary.

Throughout the charette, discussions on safety of the campus were brought up.

Additional measures, such as electronic security systems for the administration, media center, and computer rooms, and other high-risk spaces need to be funded with operational funds rather than CIP project funds. The installation of these electronic systems, including conduit, wiring and electronic devices, will need to be coordinated during the design

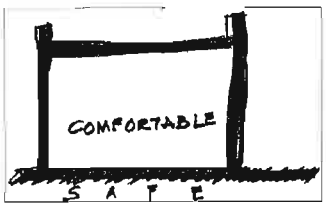

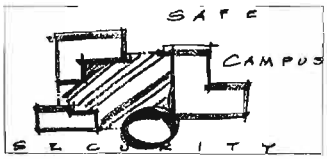

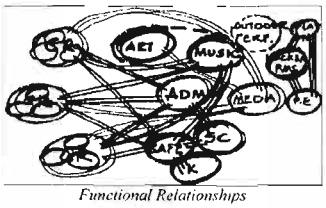

Functional Relationships

Exploration

CHARETTE ONE
March 14 – 15, 2005

THE OBJECTIVE – LEARNING STRATEGIES AND SITE CONCEPT

The main objective of this charette was to come up with a site concept for Ewa Makai Middle School. It would locate the school buildings or building, playing fields, parking and drop off points in relation to one another and to the streets and neighboring properties. In order to reach this goal, preliminary discussion had to take place in regards to learning strategies and how students learn and teachers teach. Organizational concepts in relation to space implications had to be well thought out in order to come up with a building configuration that would fit the social patterns and structures for this school. Throughout this charette, The Orcutt/Winslow Partnership architects embarked on a series of group exercises to draw out ideas from the steering committee.

Group Activities
The Facilitators led the charette participants through a series of small group activities each day to help them explore options and prepare for the decisions involved in establishing a site concept. A full accounting and record of the activities is included in the appendix.

Day One:
1. The groups were asked: How do we learn and where do we learn?
2. This lead to an exercise to discuss teaching styles.
3. Finally, the participants discussed their ideas on the site concept and the "Right School" for the Ewa Community.

Day Two:
1. The participants were asked to describe the typical characteristics of a middle school adolescent. This exercise provided insight into space implications for the school.
2. This led to a second exercise discussing how we can create experiences in spaces that are non-traditional.
3. Finally, each group examined certain specific spaces for the school and came up with design suggestions and ideas.

Day Three
1. The facilitators asked the participants to present their homework assignment from the night before. Their homework was: **"Think outside the box."** Various innovative ideas were presented.
2. The second part of the day was spent reviewing the FADS (Facility Assessment Development Schedule), determining the exact count of classrooms, and functional relationships.

Day Four:
1. Participants presented their ideas to create an exciting space as the first exercise.
2. The facilitators then asked the groups to come up with concepts for one classroom Neighborhood. Various conceptual plans were developed.
3. The Gentry (developer) civil engineer then discussed the site constraints.

Day Five:
The facilitators and architects worked the night before to come up with different site concepts based on the week's discussion.

Four schemes were presented:
Three of the schemes featured a single building concept. One of the schemes featured a campus plan with separate buildings and large open spaces.

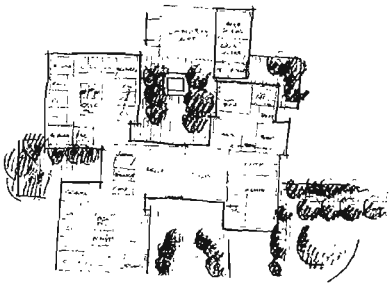
One Building - Scheme A

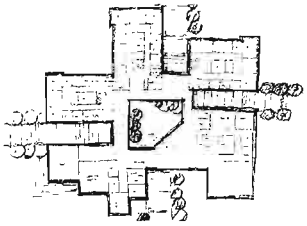

One Building – Scheme B

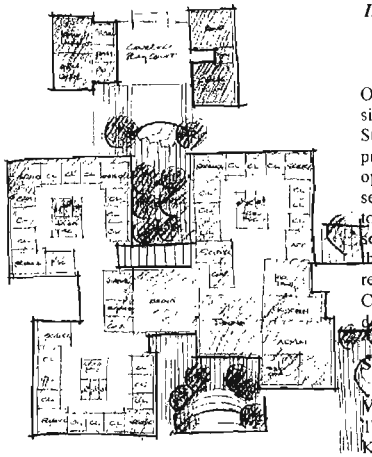

One Building Scheme C

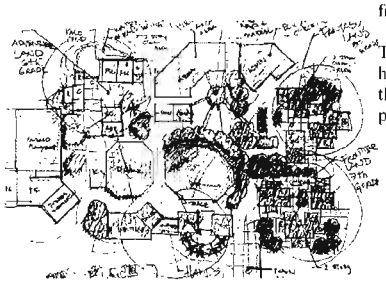

Individual Buildings in an Open Campus SchemeD

On the last day of the charette, a definitive site concept was not decided upon. The Steering Committee wavered on whether to proceed with a one building scheme or an open campus scheme with a number of separate buildings. The group was leaning towards exploring further a one-building scheme due to the intriguing possiblilities this offered such as safety and security and relationship to the educational plan. Certain specific objectives, however, were decided upon as follows:

SITE CONCEPTS

Visual Front/Physical Front
The visual front of the school will be along Kapolei Parkway. Circulation and access to the school will occur at the Northeast corner of the site. This highly visible corner will convey the image of the school, friendly and open to the community.

The steering committee discussed that a highly identifiable entry be designed for the school and a circulation path to direct pedestrians be placed at this corner.

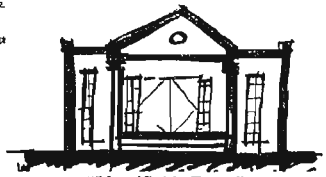

"Identifiable Entry"

The physical front entrance to the school will be on the northeast corner of the site and it was desired that the administrative services be placed there. Nearby and possibly adjacent to the Administration will be the Media Center. A fire access lane that is minimum 20 ft. wide should be provided around the site or buildings.

Parking and Drop-Off
Bus drop-off and parking will be along Kapolei Parkway and a secondary access drive and parking for parent drop-off will be at the north side of the site. Access from Kapolei Parkway will only be right turn in and right turn out as mandated by the City. The City also requested a deceleration lane along Kapolei Parkway. The parent drop-off access and parking will be allowed to left turn, right turn or go straight out.

Playing Fields
The play courts, and playing fields will be located on the West side of the property.

Site accommodation for a covered playcourt will also be provided. Since the actual building was not set at this charette, further discussion on the final location of the covered playcourt was deferred until later.

BUILDING CONCEPTS

Kinds of Buildings
The exact configuration of the buildings or building was not set at this charette since the group was still deciding on the concept of a separate building campus scheme or a one building scheme. The group did desire certain "big ideas" or "Aha's" be incorporated into the final concept as follows:

- Amphitheater which may be the "heart" of the school
- Places in the school that students can explore
- A safe and secure campus
- Inviting and low maintenance
- Identifiable entry
- Performance areas
- Provide lots of shade and socialization areas
- Obstacle route and running track around the school
- Theme park setting
- Indoor mall concept
- Food kiosks, information center, student store
- More storage
- One story rather than 2 story buildings since stairwells may be a security issue
- Room that can be used for life-sized projections

Support Facilities
A central plant is needed for air conditioning and electrical power. The DAGS coordinator suggested during the charette that the central plant be placed near Kapolei Parkway since the utilities come off this road.

Curriculum
A lengthy discussion occurred during this charette on the actual classroom cluster and learning style that would be done in Ewa Makai Middle School. Options included a four core setup with a "wheel" teacher at the center and an elective outside, a four core setup with the "wheel" and elective subject outside, a five classroom setup with the wheel as part of the core and elective subject outside, and special education inclusion. The final classroom setup and final classroom count was not decided until the second charette session.

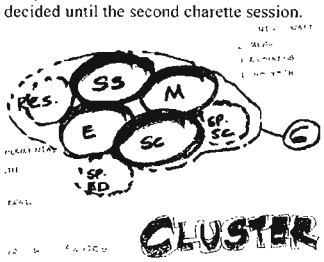

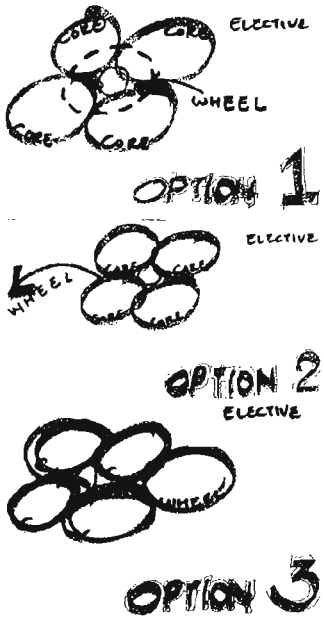

Technological Access Throughout
The technological infrastructure for cabling will be provided with funding from the State's Capital Improvements Programs (CIP) budget.

The school will be equipped to keep pace with the technologies found in the workplace and in the world. Students will

be able to simulate work environments to get a real sense of the world, facilitating their transition from school to work.

Voice/video and data connection capability will be provided not only in the classrooms but throughout the school.

Internet access will provide linkages to world wide communication networks. The potential for networking with the Ewa Beach community will also be explored.

These technologies will allow for flexibility as 21st century concepts such as the electronic or virtual reality school can make it possible for life-long learning to take place virtually everywhere in the school, home and workplace.

The Ideas and Aha's

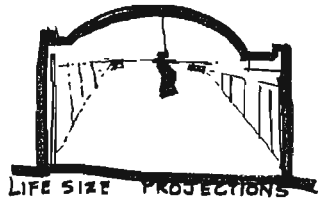

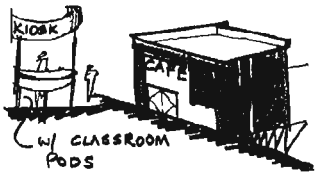

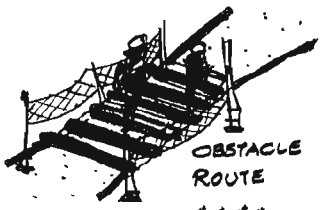

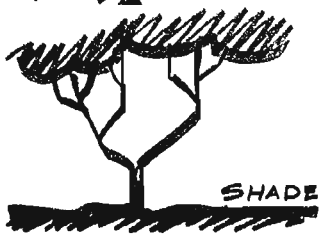

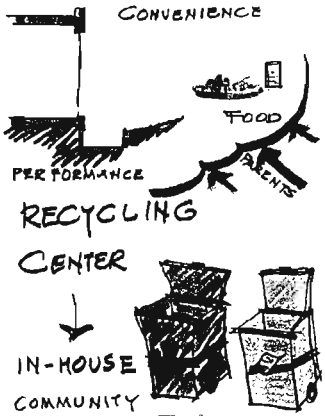

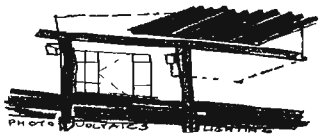

CHARETTE TWO

April 11 -15, 2005

THE OBJECTIVE – BUILDING AND SITE DEVELOPMENT

The main objective of this charette was to develop the spaces for the building and to further develop the site concept. Within the three week break prior to this charette, the Architects refined the FADS and area program with the DOE and tried to further examine each of the building concepts presented during Charette One.

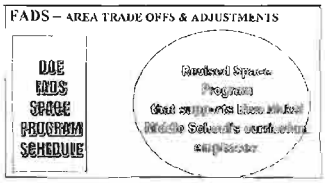

The DOE Facilities Assessment and Development Schedule (FADS) was used as the basis for forming the room schedule with the type, quantity and size of rooms. The FADS was revised to support Ewa Makai Middle School's specific curricula and educational plan by way of tradeoff.

Day One

1. Facilitators re-visited Charette One decisions to refresh the group's memory. An exercise was conducted asking the group to present ideas on learning styles and how they relate to the building. The architects then presented 10 varying building and site schemes for discussion and feedback.

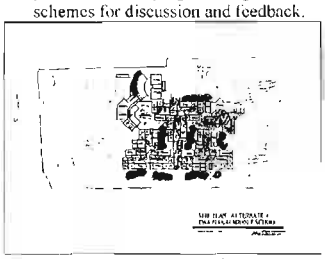

Scheme A – Consolidated Bldgs. in a Campus Plan

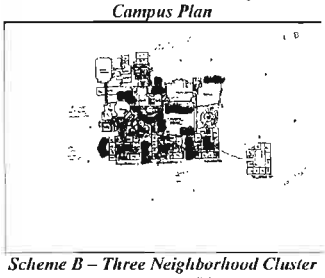

Scheme B – Three Neighborhood Cluster in a Campus Plan

Scheme C – One Bldg. – Three Neighborhoods

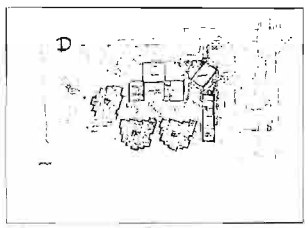

Scheme D – Three Neighborhoods, Open Campus Plan

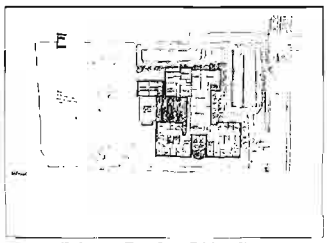

Scheme E – One Bldg., Two Neighborhoods

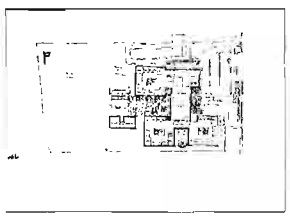

Scheme F – One Bldg., Three Neighborhoods

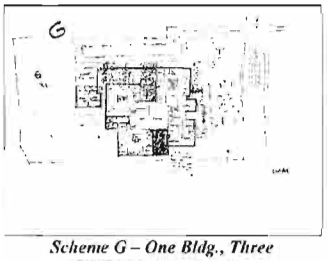

Scheme G – One Bldg., Three Neighborhoods Variation

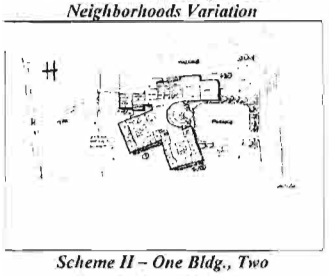

Scheme H – One Bldg., Two Neighborhood Variation

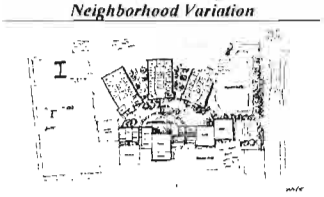

Scheme I – Three Neighborhood, Partial Campus Plan with Village Green

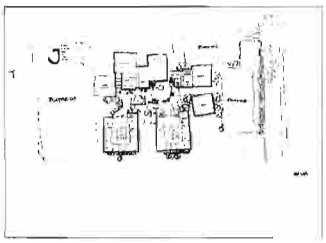

Scheme J – Two Neighborhood, Partial Campus Plan with Village Green

The afternoon session of this day one's charette reviewed and discussed all the different schemes. The group continued to waver on the one building closed campus idea or the separate building open campus plan.

Day Two
The Architects consolidated the ideas and discussion from Day one and came up with three conceptual building/site schemes. These schemes were presented to the group.

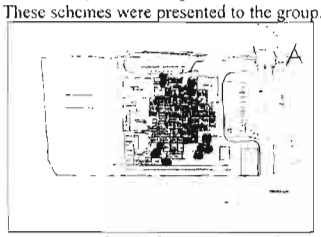

Scheme A – One Bldg. with Media Center as the hub with Three Neighborhoods

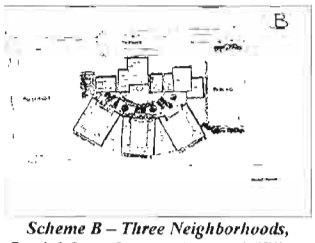

Scheme B – Three Neighborhoods, Partial Open Campus Plan with Village Green

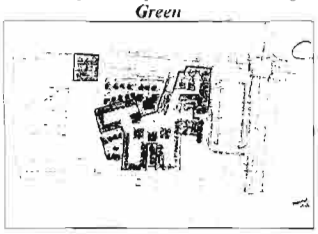

Scheme C – One Bldg., Three Neighborhoods

The steering committee discussed and made comments on each of the three schemes. Scheme C had the most comments in it's favor and the group started leaning in the direction of a one building concept.

Day Three
This day's exercise further refined specific elements of the plan and re-visited the educational goals as it relates to the building plan.

Day Four
1. The architects presented further refinements on the plan and the group further refined the plan. Specific areas of discussion were:
   - The electives area
   - Administration
   - Kitchen
   - Teacher planning
   - Special education and the FSC rooms
   - Performance areas

2. Later during the day, selected students came and discussed their ideas on what they wished for Ewa Makai Middle School.

Day Five
The Architects presented a further refinement of the ideas presented on this last day. A conceptual plan and 3-D space renderings were presented to define the character of the school.

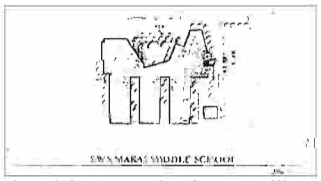

Overall Site Plan – One Bldg. with Three Neighborhoods

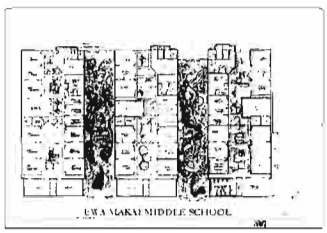

Partial Detailed Plan @ Neighborhoods

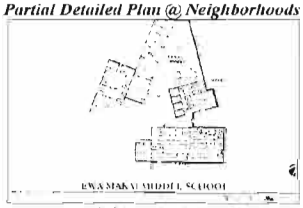

Partial Detailed Plan @ Administration/Media Center/Kitchen

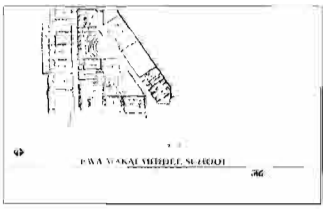

Partial Detailed Plan @ Elective Wing

Character Sketch of Entry

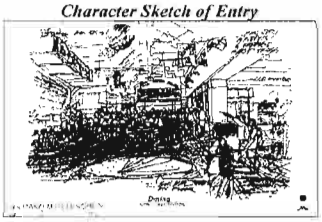

Character Sketch of Dining Commons

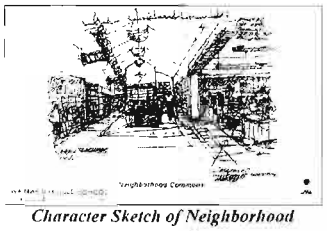

Character Sketch of Neighborhood Commons

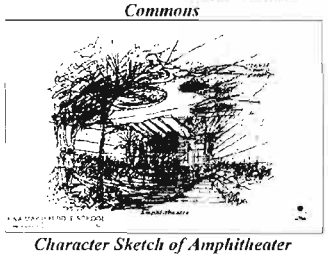

Character Sketch of Amphitheater

Charette Two Design Results Summary

Features of this conceptual plan included:

- A one building concept for the entire middle school.
- Three separate "Neighborhoods" with an interior commons.
- Classroom setup allowing interdisciplinary team teaching with adjacent science classrooms and resource classrooms
- Operable walls between classrooms to allow team teaching and collaboration
- An indoor dining area with a performance area
- An Administration area at the front entry of the school
- A separated Comprehensive Student Support area, Counseling Center, and Student Activity Center that allows ease of access by students
- An electives wing that houses art, dance, computer, music and supplemental classrooms
- A physical education area directly adjacent to the playfields and the covered playcourt
- Incorporation of a Virtual Reality Room near the Media Center
- Incorporation of an outdoor amphitheater to support the school's educational plan of performance
- Outdoor learning gardens adjacent to the Neighborhood wings to support the school's educational plan of environmental studies
- A Fitness Center and PE classroom to support the school's education plan of health and fitness

"WOW"

--Annette Nishikawa--

Comments on the Design

After reviewing the plans, the group said:

- The design had a feeling of safety and security
- The amphitheater was the "heart" of the school
- It felt like they were at "Kahala Mall"
- There was flexibility in the classroom layout
- There was a discussion on de-centralizing the restrooms and spreading them out at the classroom core. The group responded that since this is a security issue, they preferred if the restrooms remained centralized near the dining area for safety, security and easy surveillance.

The Steering Committee then commented on the individual space layouts for further refinement and this Charette Two ended.

CHARETTE THREE

May 9 – 11th, 2005

The main objective of this charette was to confirm the outcomes of the previous charettes. Working with the site and building concepts from Charettes One & Two, the architects developed a cohesive conceptual design in the three weeks prior to the start of Charette Three. This conceptual design captured the educational goals previously presented and the community's vision for the school.

Day One:

This day was spent reviewing a more finalized floor plan of the building. The Steering Committee generated some review comments on certain spaces and functional relationships.

Some comments received were:

- Adjustments of a few of the science classrooms placement within the neighborhoods.
- Addition of storage areas
- Revisions at the CSSS and workrooms spaces
- Adjustments at the counselor offices, lobby, and waiting
- Adjustments at the elective area such as the art classrooms, music and special education
- Addition of teacher's restrooms at the elective area
- Adjustments at the custodial center

Day Two

The Architects completed the revisions requested from Day One. Additional comments were received as follows:

- Revise storage area adjacent to the covered playcourts to be more secure
- Revise teacher's workroom to have access to the movable storage area
- Revise some classrooms and science rooms to show more flexible furniture
- Add storage in the dining area for chair and stage storage
- Revise counters at administration lobby to allow access to storage

Day Three

The Architects and Steering Committee presented the final concept on Day Three. Included in the presentation were final plan drawings showing an overall floor plan and detailed plans of certain areas of the building, a site plan, exterior elevations, renderings and a scale model. Simple furniture plans were provided only to depict scale and interior concepts. The renderings of the school from different perspectives brought to life the physical spaces of the campus and buildings, and depicted how these spaces will function.

A few of the selected Steering Committee members were asked to present certain parts of the building and site. The plans and renderings succeeded in capturing the Steering Committee's vision for the school.

"As I look at this school's design, I firmly believe that tour buses will be bringing in people to view it and students will be breaking down it's doors to enter"

--Paul Winslow—

"Debbie Hatada explaining the amphitheater"

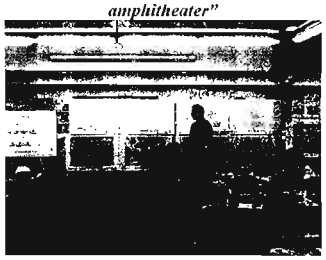

"Marvin explaining the function of the Neighborhoods"

"The Architectural Team with Senator Espero and Representative Pine"

FINAL DESIGN CONCEPTS

CIVIL PLAN

Grading and Drainage
Grading will conform to City & County of Honolulu codes and ordinances. On-site fill will be used wherever possible. Fill slopes will not exceed 2:1 at building foundations, and site grading will have slopes of 3:1 or less whenever possible. Erosion, dust and pollution controls will meet all government requirements.

The 18.542 acre site for the school is located in the Ewa Plains as part of a residential area master planned by Gentry.

The internal drainage system for the school will use swales wherever possible, with a minimum slope of one percent. Building finished floors will be higher than the surrounding grades, and runoff will be directed away from the building.

Wastewater/Water
The potable water supply will be off the Kapolei Parkway master meter, which will have provisions for a fire meter as well. Fire hydrants will be installed on the site.

Roadways
Access to the school will be off Kapolei Parkway. Two access drives/roads are planned for the school. The North access will be for parent drop-off and the east access off Kapolei Parkway will be right turn in and right turn out only for buses.

LANDSCAPE PLAN

Design Approach
The landscape concept for the Ewa Makai Middle School will support the design of the classroom building and addresses function, the Hawaiian culture, the climate of the Ewa plains, and landscape maintenance.

Plan Features
Entry
The school will have a sign at the corner or near Kapolei Parkway and the entry drive. The sign will have accent landscaping to support it such as palms and low ground covers.

Entry Plaza
The entrance to the school will be a welcoming landscaped plaza with special paving, accent palms, built-in seating, and an identification sign for the school and near the administration. It will be a place where students can meet friends before or after school.

Amphitheater
The Amphitheater will be the main gathering space for the school. It will have raised seating that may accommodate upwards to about 1000 people. The space will be shaded by a fabric-like structure that could be in the form of sail. the floor of the amphitheater will be paved with special paving in a blue wave pattern suggesting a voyage on the sea.

Classroom Courtyards
Each classroom courtyard will have a theme which supports the middle school curriculum and Ewa Makai Middle School's educational plan. Examples are: Space, Native Hawaiian Species, and an ahupua'a. Students may be encouraged to help maintain these spaces. If a lo'i is integrated into the design, students could be involved in the planting and harvesting of taro.

The courtyards are long and linear. The landscape design will break up the spaces and create smaller gathering spaces. Natural shapes and curvilinear forms will lessen the liner feel of the space During the charette sessions, the Steering Committee specifically requested these types of landscape concepts be integrated into the school and curriculum.

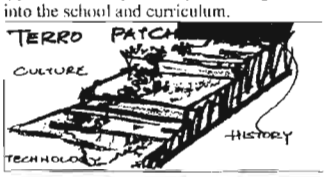

ARCHITECTURAL PLAN

Siting
The preferred one-building concept was sited to achieve a safe, secure and dynamic school environment for students, teachers, and the community. The Administration area and Media Center was sited on the Northeast corner of the building as the first point of entry for students. Students would enter the building at this corner and be directed into a "mall" like space. Off the South side of the mall will be the three Classroom Neighborhoods. The central commons of the building will be the dining facility where students can socialize and gather. At the West wing of the building will be all the specialty classrooms, electives and the PE Locker/Showers. The PE component will be directly adjacent to the covered playcourt and outdoor playfields and playcourts.

"Social and gathering places"

As a major venue for community as well as school events, the outdoor amphitheater is centrally located at the North end of the building and is actually the "heart" of the school.

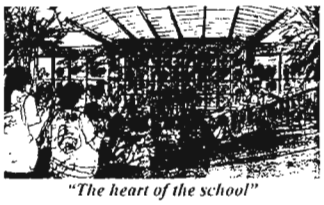

"The heart of the school"

Historic Ewa Plantation Style
Honoring the history of the region, the school building will have a simple roof form, deep overhangs and articulated windows of the Ewa Plantation residential style. Hip/gable roofs and generous eaves will provide protection from the sun. Clerestory windows at various location throughout the building will provide daylighting options which enhances learning. Cool, soothing exterior materials will add a feeling of comfort for the staff and students. Vibrant interior finishes and colors will enhance the performance aspect of the school.

"The historic Ewa style"

Diversity, Comfort, Safety and Security
This one-story building will be designed with both a residential and spacious feeling that promotes responsibility through a sense of pride and ownership. Flexible learning environments will support diverse instructional strategies and group as well as individual learning experiences.

"A variety of learning spaces"

Inviting entries, indoor-outdoor spaces and landscaped courtyards will provide a variety of places for student interaction. Buildings will be designed with view and daylight windows as well as to ensure visibility for security.

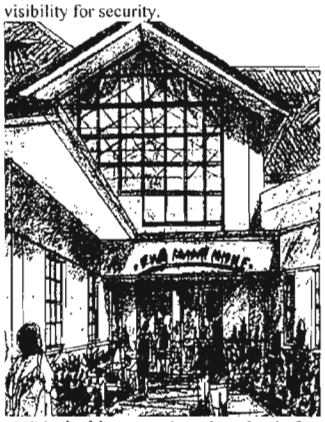

"An inviting entry into the school of tomorrow"

STRUCTURAL PLAN

Foundation and Floor Slab
The structural system will be slab-on-grade, with a foundation of continuous and spread footings bearing on situ stiff or engineered fill.

Concrete slab-on-grade will be reinforced and on a moisture barrier.

Walls and Columns
Exterior, bearing and shear walls will be grouted concrete masonry units (CMU) or reinforced concrete walls. Poured-in-place concrete or CMU columns will be used to support beams and girders.

Roof
A steel roof and insulation will be supported by structural steel beams, trusses or frames. Purlins will be used to support the span between the steel beams, trusses or frames.

MECHANICAL PLAN

Fire Sprinklers
As required by code, the building will be protected by a wet pipe fire sprinkler system. To minimize vandalism, fire sprinkler risers will be placed indoors and sprinkler heads will be concealed pendant type.

Air Conditioning
The building will be provided with air conditioning. No air conditioning will be provided for the covered playcourt, locker/showers, restrooms and the kitchen except for the kitchen manager's office. In this school, since the dining area is part of the interior commons, the area will be air conditioned.

Plumbing System
Floor-mounted, flush valve water closets, urinals, wall-hung lavatories, floor drains and a hose bibb will be provided for restrooms. fixtures will be selected to meet ultra-flow flow requirements. No hot water will be provided to these restrooms.

All classrooms or as required will be provided with countertop stainless steel sinks, with a solids interceptor. No hot water will be provided. The science classrooms will be provided with acid-resistant sinks and countertops. The kitchen next to the dining area will be provided with a grease trap at the exterior of the building.

The PE Locker/Shower facilities will be provided with private showers Hot water will be provided to all showers. Shower valves will be a pressure compensated type with volume and temperature control.

Handicapped accessibility provisions will be designed using the *American with Disabilities Act Accessibilities Guidelines*. Fixture heights will be designed to adult height dimensions.

ELECTRICAL PLAN

Electrical System
Primary power will be provided by Hawaiian Electric Company. An underground system will deliver power from Kapolei Parkway to the primary switch and service transformer dedicated to the campus.

Secondary power for the school will originate from a new pad-mounted transformer and will be routed to a metering switchboard in the central plant building.

Technology Infrastructure
The technology infrastructure for cabling will be provided. For the Neighborhood building wings and all other classroom building wings, telephone and television cables will be installed to the terminal blocks on the intermediate distribution frame backboards, and data cables will be installed to the fiber distribution cabinets on the intermediate distribution frame backboards.

Telephone, television and data cables will be installed to all outlets in the administration area, dining, student activities area, and media center. Also, telephone and data cables will be installed in the PE offices.

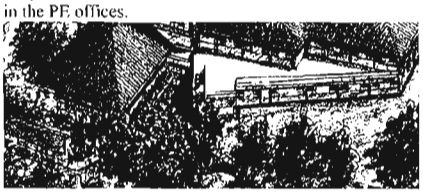

Telephone System
Telephone service will be provided by Hawaiian Telephone Company. The telephone service will be routed through an underground system to the signal room in the Media Center.

Cable Television System
Cable television service will be provided by Oceanic Cable Co. The cable television service will be routed through an underground system to the signal room in the Media Center.

Exterior Lighting
Energy-efficient, high pressure sodium luminaires will be provided around the exterior of the building for security and general illumination. High pressure sodium pole-mounted lights will be provided for illumination of all driveways and parking areas.

General area lighting will be provided for the outdoor amphitheater stage area. Low-level landscape lighting will be provided for accent lighting. If budget allows, specialty performance lighting may be included. The exterior lights will be operated by a lighting contactor with time switch control.

Interior Lighting
General interior illumination will be provided by energy-efficient fluorescent luminaires, and will be recessed into the ceiling wherever possible.

As required by code, emergency lighting will be provided within selected fluorescent luminaires. Illuminated exit signs will be provided for all emergency exits and exit passageways.

For large rooms, multi-level and/or zoning switching will be provided for energy conservation and selectivity for task illumination. Track-type lighting and wall box dimmers will be provided for the stage area in the dining commons. As budget allows, specialty lighting may be provided.

Fire Alarm System
A campus-wide, integrated fire alarm system will be provided, with the main fire alarm control panel located within the administration area. Fire alarm equipment for the entire building will also be provided. Additional devices, such as smoke detectors, food service fire protection system connections and sprinkler system connections, will be provided as necessary.

CONCEPTUAL DESIGN SUMMARY

CIVIL PLAN

- Conformance to City and County of Honolulu grading codes and ordinances
- On-site fill used wherever possible
- Fill slopes not to exceed 2:1 at building foundations; site grading slopes of 3:1 or less wherever possible
- Erosion, dust and pollution controls per government requirements
- Site outside 100-year flood plain
- Swales for internal drainage system wherever possible with a minimum one percent slope
- Building finished floors higher than surrounding grades; direct run-off away from buildings
- Potable water supply off Kapolei Parkway master meter; includes provisions for fire meter
- Install fire hydrants on site
- Access to school off Kapolei Parkway by way of two access roads

LANDSCAPE PLAN

- Landscape plan supports the educational plan and middle school concept
- Dramatic landscaped plaza at the entry that is welcoming using special paving, accent palms and trees, built-in seating and identification signage
- Medium to large canopy trees for shade in large, open spaces to medium trees for shade in tighter areas and to define student gathering places
- Special landscaping at the amphitheater to depict a sailing voyage
- Cultural garden courtyards that are themed to support the middle school curriculum for Ewa Makai Middle School

ARCHITECTURAL PLAN

- A one-building concept to provide a safe, secure but dynamic school environment
- Administration and the Media Center located near the front entry of the school
- Comprehensive Student Support Services, Student Activities, and Counseling situated for ease of access for students

- The amphitheater at the heart of the school
- Building design honors the history of the region which is the Ewa Plantation style
- Simple roof forms, deep overhangs and articulated windows
- Hip/gable roofs and generous eaves for protection from the sun
- Cool, soothing exterior materials and finishes and colors for added comfort
- Vibrant interior colors to enhance learning
- Three Neighborhoods that support the flexible learning environment, interdisciplinary team teaching and diverse instructional strategies and learning experiences
- Variety of inviting indoor-outdoor spaces for student interaction
- View and clerestory windows for daylighting and security

STRUCTURAL PLAN

- Slab-on-grade, with foundation of continuous and spread footings, bearing on solid material
- Reinforced concrete slab-on-grade with moisture barrier
- Exterior, bearing and shear walls of grouted CMU or reinforced concrete walls
- Poured-in-place concrete or CMU columns to support beams and girders

- Steel roof and insulation supported by structural steel beams, trusses or frames

MECHANICAL PLAN

- Wet pipe fire sprinkler system for entire building
- Air conditioning for entire building; no air conditioning for covered playcourt, PE lockers/showers, kitchen except for manager's office
- For restrooms, ultra-low flow water closets, urinals, wall-hung lavatories, floor drains and hose bibb
- For classrooms, countertop stainless steel sinks, with solids interceptor
- For science classrooms, acid resistant sinks and countertops
- For kitchen, grease trap at exterior of the building
- Private showers in the PE locker/showers
- Handicapped accessibility design using *American with Disabilities Act Accessibility Guidelines*

ELECTRICAL PLAN

- Electrical power from Hawaiian Electric Company
- Technology infrastructure includes installation of telephone, television and data cables to the intermediate distribution frame backboards for the building and to all outlets in administration, dining and media center
- Telephone service from Hawaiian Telephone Company
- Cable television service from Oceanic Time Warner Cable
- Energy-efficient, high pressure sodium luminaires around building exterior
- High-pressure sodium pole-mounted lights for driveway and parking areas
- General area lighting for outdoor stag area. As budget allows, specialty theatrical lighting may be added
- Low-level landscape lighting for accent lighting only
- General interior illumination by energy efficient fluorescent luminaires
- Emergency lighting as required by code
- For large rooms, multi-level and/or zoning switching for energy conservation and selectivity for task
- Track-type lighting and wall box dimmers for dining area stage
- Campus-wide, integrated fire alarm system
- Fire alarm equipment in building
- Smoke detectors, food service fire protection system connections and sprinkler system connections as necessary

COST ESTIMATES

A conceptual phase cost estimate has been prepared for Ewa Makai Middle School. This estimate is for on-site civil, landscape, architectural, mechanical, electrical and structural costs. The total estimated cost of the proposed school construction, in terms of 2005 dollars, is approximately **$64.3 Million Dollars.**

This estimate does not include the cost of the portable classrooms shown on the site plan. It does not include design fees, permit fees, utility connection services fees, furniture and equipment costs for furniture that is provided by the State, or nay other costs not directly related to the construction of the school.

CONCEPTUAL DESIGN

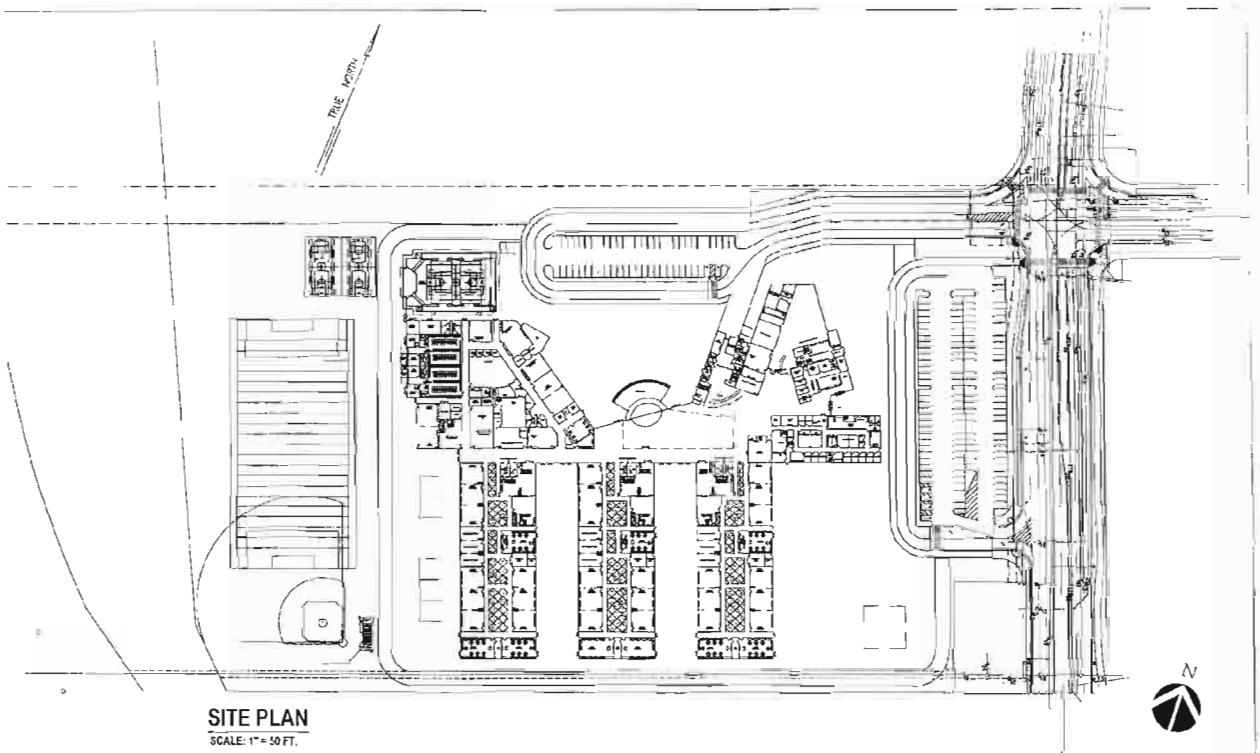

SITE PLAN

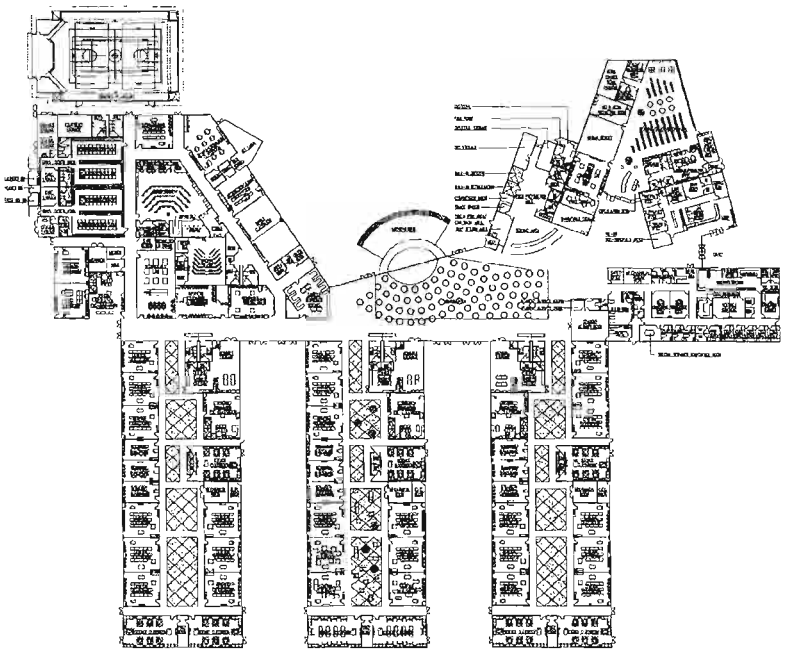

GRAPHIC SCALE

CONCEPT

EWA MAKAI MIDDLE SCHOOL

MAY 2005 - CHARETTE THREE

DEVELOPMENT OAHU HAWAII

OVERALL BUILDING PLAN

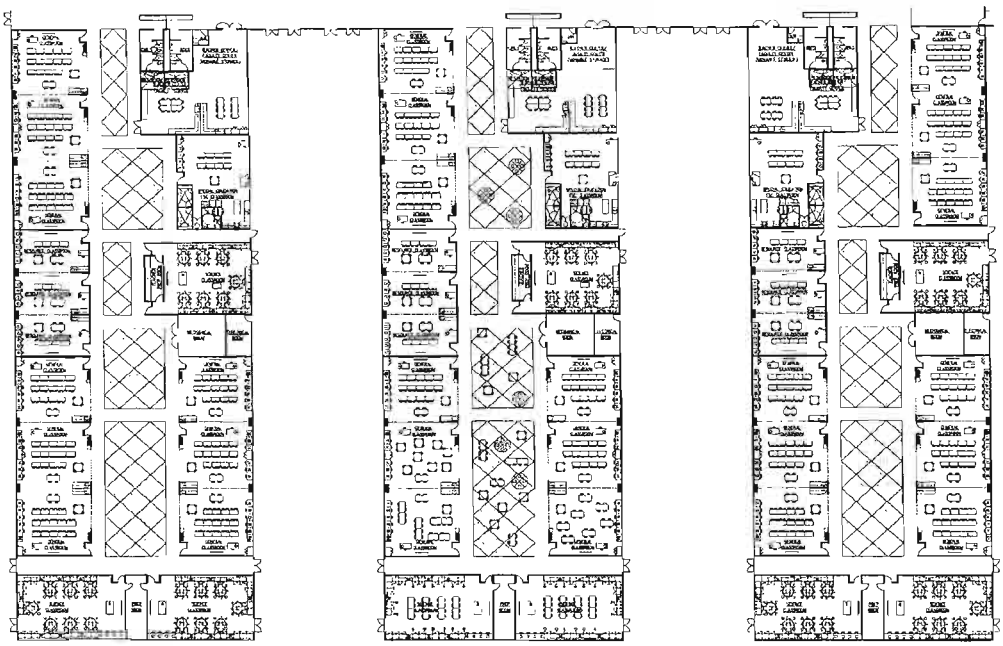

GRAPHIC SCALE

CONCEPT

EWA MAKAI MIDDLE SCHOOL

MAY 2005 - CHARETTE THREE

DEVELOPMENT OAHU HAWAII

DETAILED PLAN @ NEIGHBORHOODS

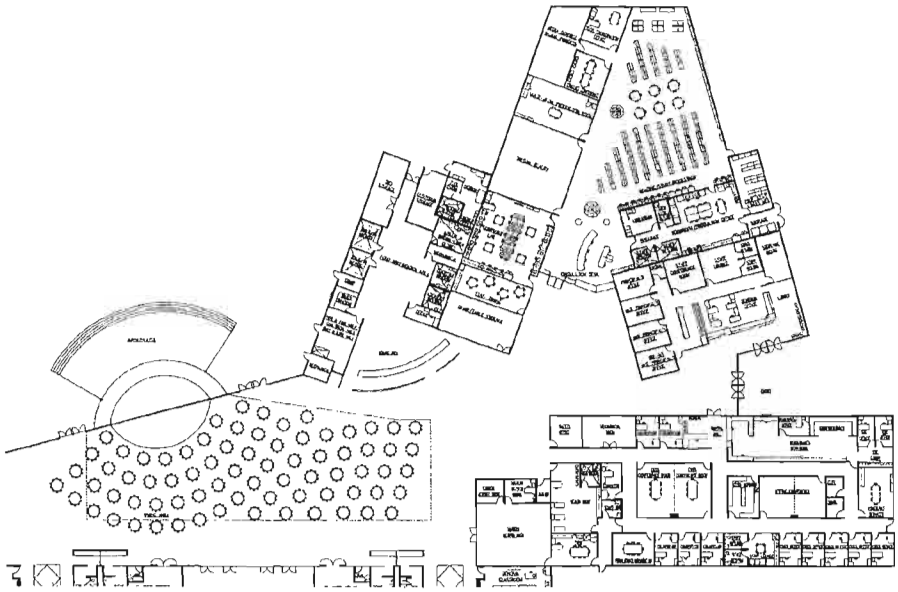

CONCEPT **EWA MAKAI MIDDLE SCHOOL** MAY 2005 - CHARETTE THREE

DEVELOPMENT OAHU HAWAII

DETAILED PLAN @ ADMINISTRATION/LIBRARY WING

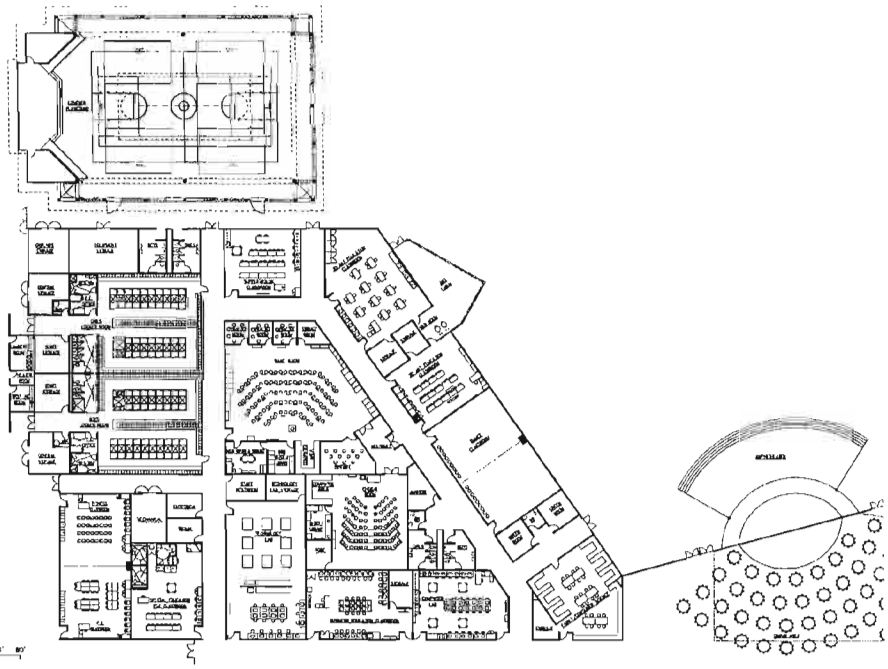

GRAPHIC SCALE

CONCEPT **EWA MAKAI MIDDLE SCHOOL** MAY 2005 - CHARETTE THREE

DEVELOPMENT OAHU HAWAII

DETAILED PLAN @ SPECIALTY CLASSROOM WING.

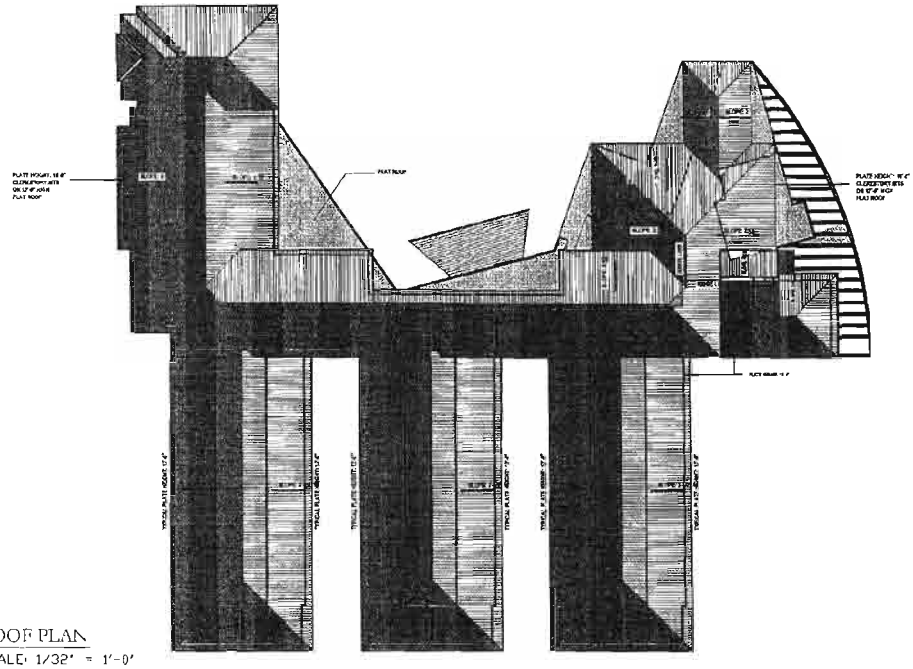

ROOF PLAN
SCALE: 1/32" = 1'-0"

ONCEPT

EWA MAKAI MIDDLE SCHOOL

MAY 2005 - CHARETTE THREE

EVELOPMENT OAHU HAWAII

ROOF PLAN

SOUTH ELEVATION

EAST ELEVATION

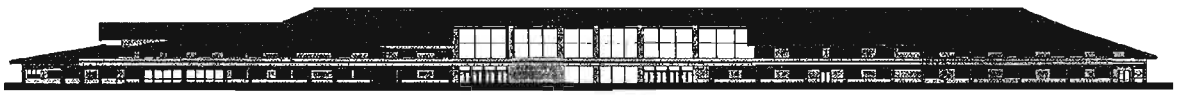

NORTH ELEVATION

WEST ELEVATION

0 10 40 80 100 FT
SCALE: 1" = 20 FT.

ONCEPT

EWA MAKAI MIDDLE SCHOOL

MAY 2005 - CHARETTE THREE

EXTERIOR ELEVATIONS

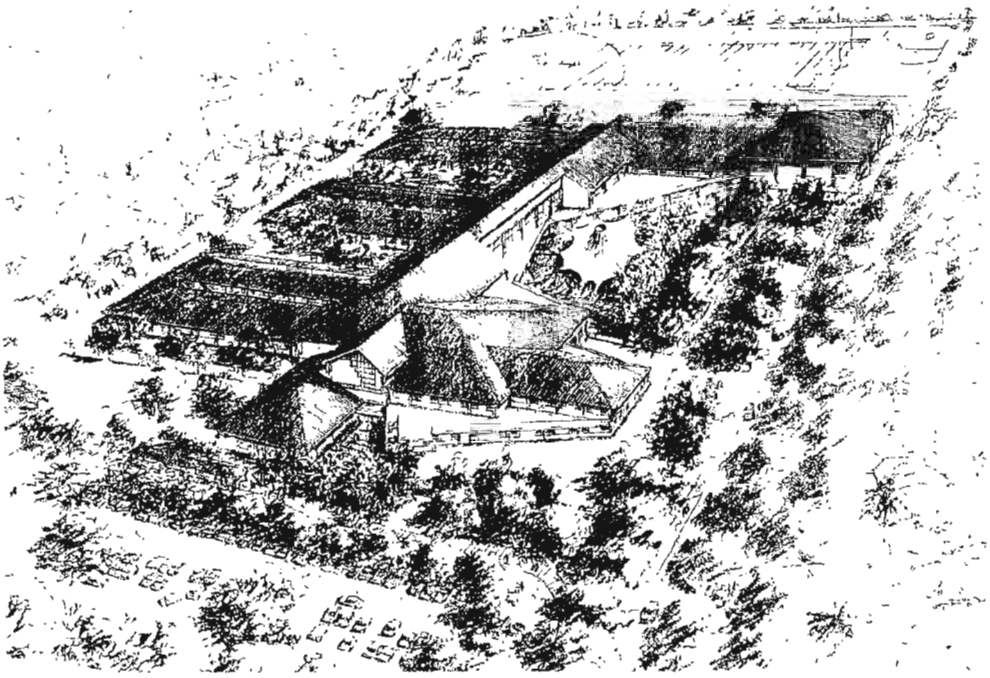

PROJECT CHARACTER SKETCH

CONCEPT
DEVELOPMENT

EWA MAKAI MIDDLE SCHOOL

OAHU HAWAII

MAY 2005- CHARETTE THRE

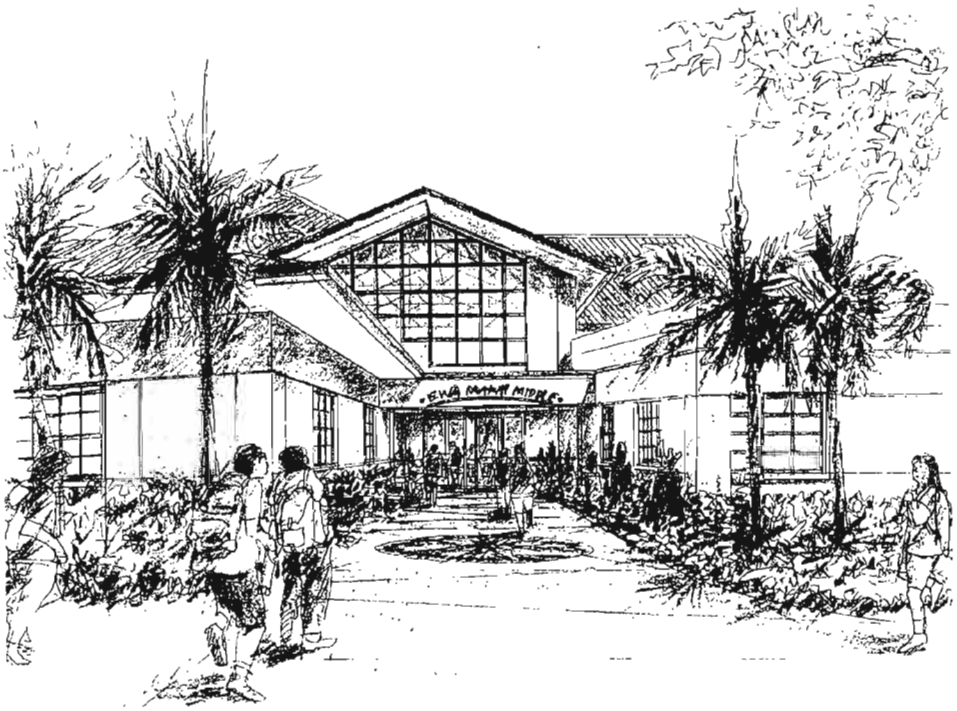

SCHOOL ENTRANCE

CONCEPT
DEVELOPMENT

EWA MAKAI MIDDLE SCHOOL

OAHU HAWAII

MAY 2005- CHARETTE THREE

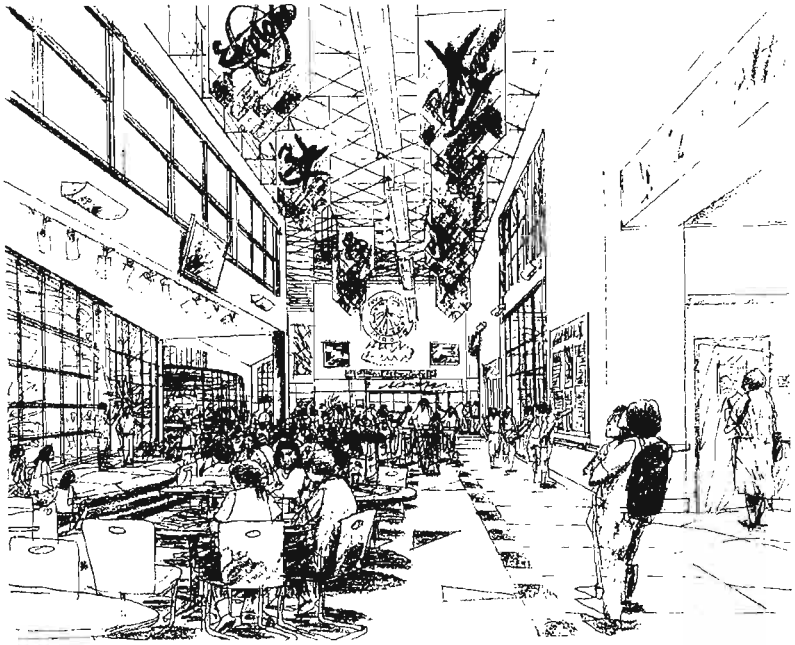

MAIN COMMONS/ DINING AREA

CONCEPT DEVELOPMENT

EWA MAKAI MIDDLE SCHOOL

OAHU HAWAII

MAY 2005- CHARETTE THREE

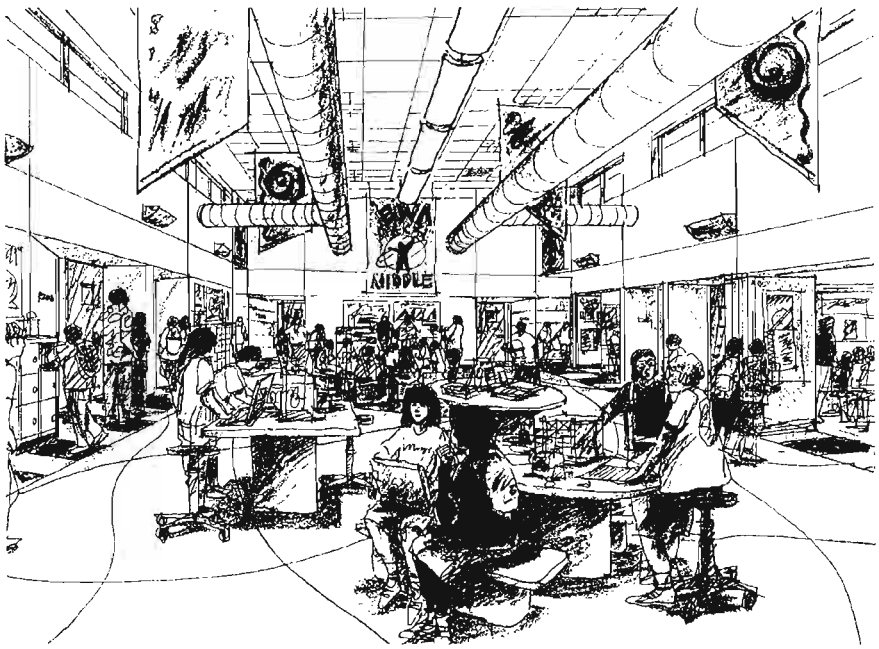

NEIGHBORHOOD COMMONS

CONCEPT DEVELOPMENT

EWA MAKAI MIDDLE SCHOOL

OAHU HAWAII

MAY 2005- CHARETTE THREE

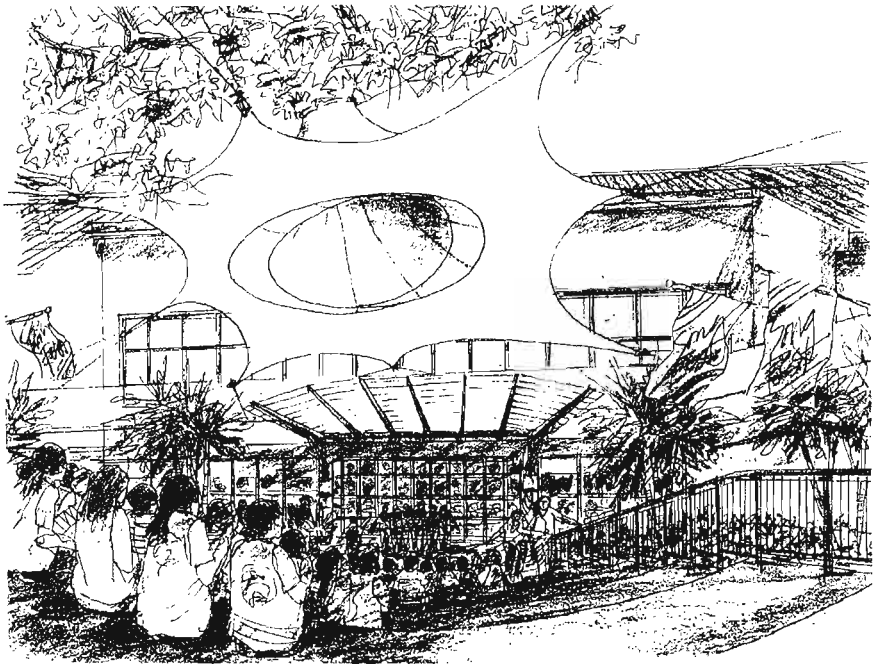

OUTDOOR AMPHI-THEATER

CONCEPT DEVELOPMENT — EWA MAKAI MIDDLE SCHOOL — MAY 2005- CHARETTE THREE

OAHU HAWAII

IN CONCLUSION

WHAT'S NEXT FOR THE SCHOOL OF TOMORROW – EWA MAKAI MIDDLE SCHOOL

The Design Process Continues
The Architects will continue to develop the design for the Ewa Makai Middle School. They will meet with teachers and other DOE specialists in programming sessions to determine the detailed plans, layouts and furnishing requirements. The schedule for the completion of the final architectural plans have not yet been decided.

The Challenge
The final design of the Ewa Middle School is directly related to the vision and educational curriculum of the school. This school is a model that has never before been seen in the State of Hawaii since it is a one-building school. It establishes a new model for the educational program and facilities specifications for Hawaii's middle schools. It will increase the middle schools' abilities to meet the needs of Hawaii's adolescents. An in doing so, it will change the future of Hawaii.

Imagine

Imagine a middle school that embraces the responsibility of educating the youth of Hawaii so that they are thoroughly prepared for the world that they are about to enter.

Imagine a middle school that is, above all a learning community where the academic achievement of every student can stand up to the standards of national scrutiny.

Imagine a middle school that functions as a transitional experience, preparing each student for the next stage of life, whatever that may be for that individual.

Imagine a middle school that is a gateway to multiple options.

Imagine a middle school that prepares each student to be a life long learner, while at the same time supporting its educators to continue the learning process as well.

Imagine a middle school that provides for good citizenship and for full participation in the life of democracy.

Imagine a middle school that contributes to the personal development of young people as social beings who have needs beyond the strictly academic.

Imagine a middle school that lays the foundation for students to participate comfortably in an increasingly technological society.

Imagine a middle school that equips young people for life in a country and world in which interdependency will link their destiny to that of others, however, different those others may be from them.

Imagine a middle school that is an institution that unabashedly advocates in behalf of young people

Imagine this middle school serving the children and communities of Hawaii.

"This group went out on a limb because that is where the fruit is. They began to fulfill the destiny which was concealed in the marrow of their bones and they seized the moment. This school will face adversities but trouble creates the capacity to handle it and it will come down to how much fire you have in your belly."

--**Steven D. Wong** quoting from various authors--

ACKNOWLEDGEMENTS

THE TASK FORCE:

- Lydell Acosta
- Gina Acosta
- Naomi Aimoto
- James Ashley
- Tom Berg
- Chris Bonilla
- Christopher Callisto
- Mamo Carreira
- Una Chan
- Curtis Chang
- Anthony Chun
- Kristen Fernandez-Kong
- Guy Figueroa
- Anne Greseth-Kim
- Tosh Hosoda
- Pat Ishihara
- Bryce Kaneshiro
- Shelley Kaniho
- Laurie Katagiri-Hoshino
- Sherry Kobayashi
- Rie Kodama
- Cynthia Lanting
- Patrice Liu
- Brenda Lowrey
- Debbie Luning
- Eileen Lynn
- Tesha Malama
- Elmer Mallari
- Chalynette Martinez
- Mel Masuda
- Teresa McMurdo
- Tish Mercado
- Janna Mihara
- Chantal Moncrease
- Julie Morihara
- Jim Moylan
- Debra Nakamoto
- Nick Nichols
- Annette Nishikawa
- John Okinaka
- Roberta Ono
- Norman Pang
- Fay Taira
- Stan Tamashiro
- Sharene Tam
- Christian Wilding
- Una Wilding
- Joline Wilson
- Marvin Yonamine

THE STEERING COMMITTEE:

- Lydell Acosta
- Ari Caracol
- Anthony Chun
- Anne Greseth-Kim
- Randy Ibarra
- John Okinaka
- Una Chan
- Debra Hatada
- Marvin Yonamine
- Annette Nishikawa
- Nick Nichols

HASEKO REPRESENTATIVE:

- Sharene Tam

GENTRY REPRESENTATIVE:

- Debra Luning

DAGS/DOE:

- George Coates
- Dail Rhee
- Galyn Nakatsuka
- Nick Nichols
- Brenda Lowrey
- Janna Mihara

THE ORCUTT/WINSLOW PARTNERSHIP

- Paul Winslow F.A.I.A., CEFPI
- Dr. Caroline Lobo, A.I.A.

MITSUNAGA & ASSOCIATES, INC.

- Steven D. Wong A.I.A., CEFPI
- Hisako Uriu
- Janel Nishida

OTHER TEACHERS, COMMUNITY & STUDENTS:

- Frances Rivero – Boy's & Girls Club
- Yvette Vasquez – Kapolei Middle
- Kirby Nii – Kapolei Middle
- Anson Chan – Kapolei Middle
- Kathy Infiesto – Kapolei Middle
- Charles Deville – Kapolei Middle
- Ariel Villanueva – Kapolei Middle
- Eric Kanemoto – CKW School Support
- Representative Kimberly Pine
- Senator Willlie Espero

Charette Participants

APPPENDICES

DOE FADS SCHEDULE

SCHOOL NAME —2cNEW	Ewa Makai	Middle	Master	YRE-M17	
DISTRICT	Example	COMPLEX: Example	Air Cond ?		
GRADE ORGANIZATION:	BOTT.	TOP:	8	RAINFALL	

CURRENT ENROLLMENT	
REGULAR ENROLLMENT	n/a
SEPC ED ENROLLMENT	
PROJECTED SPECIAL EDUCATION ENROLLMENT @ DESIGN	158
SPED CLRM(S) or % ENROLL	
DESIGN ENROLLMENT	1050
REGULAR ENROLLMENT	892
SPECIAL ED @ 15.0% of DE	158

GENERAL CLRM	25
SCIENCE CLRM	5
MAX ADJUSTMENT	
SPEC ED —2c(12 /Cl	13
SUPPL PORTABLES	0
PEAK PORTABLES	5

DESIGN ENROLLMENT 1050

		Existing No.	Existing % sf		—fRemain 0		
Language Arts —2c—6F+(2)		0				6	6
Mathematics —2c—6F+(2) Gr		0				6	6
Foreign Language						0	0
Social Studies —2c—6F+(2) I		0				6	6
Health —2c—6F+(1) Gr 6 Pro		0				2	2
Physical Ed. —2c—6F+(2) Gr		0				4	4
Arts & Crafts —6F—2c +(0.50		0				1	1
Music —6F—2c+(0.50) Gr 6 F		0			150 (2ct)	2	2
Family & Consumer Science		0				0	0
Business Education		0				1	1
Agriculture		0				0	0
Industrial Arts		0				1	1
Science —2c—6F+(4) Gr 6 Pi		0				6	6
Special Education		0			0	13	13
Grade (6) General Clrms		0				1	1
TOTAL PERMANENT CLRMS							
Supplemental Program Permanents		0				5	5
Plus Peak Portables							
	15	0				54	54

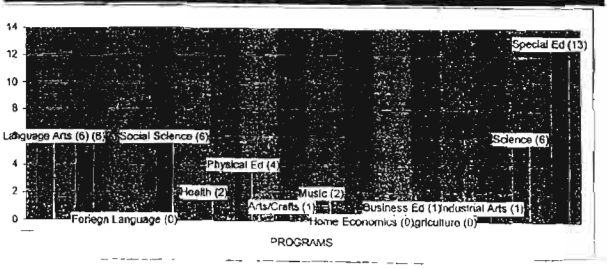

Max Project Area = 120802

GENERAL CLASSROOMS						
General Classroom "A"	25	980	24500	—2	24500	24500
Gen Classroom "B" & "C"	5	980	4900	—2	4900	4900
SPECIAL CLASSROOMS						
Self Contained	4	1880	7520	—2	7520	7520
Resource	9	980	8820	—2	8820	8820
ART						
General Purpose Art Rm	1	2050	2050	—2	2050	2050
MUSIC						
Choral		1925	0		0	0
Band	2	3730	7460	—2	7460	7460
Common Area	1	600	600	—2	600	600
TOTAL CLRMS	0		0			0
MINIMUM PERMANENT CLRM REQUIRED BY EDSPEC					49	
PERMANENT CLRMS REQUESTED BY SCHOOL PLAN					54	

Max Project Area = 120802

School Area = EDSPEC BUDGET $ PROJECT $

FAMILY & CONSUMER SCIENCE						
Family & Consumer Science	0	2550	0		0	0
BUSINESS EDUCATION						
Shorthand / Typing	1	1380	1380	—2	1380	1380
AGRICULTURAL ARTS						
Horticulture	0	2860	0		0	0
INDUSTRIAL ARTS						
Metals Laboratory	0	4160	0		0	0
Woods Laboratory	0	4160	0		0	0
Combined Metal/Wood	1	4160	4160	—2	4160	4160
Industrial Technology	0	2950	0		0	0
SCIENCE						
General Science	6	1750	10500	—2	10500	10500
Optional Science	0	2260	0		0	0
MINIMUM PERMANENT CLRM REQUIRED BY EDSPEC					49	
PERMANENT CLRMS REQUESTED BY SCHOOL PLAN					54	

Max Project Area = 120802

School Area = EDSPEC BUDGET $ PROJECT $

Administrative Center	1		10460	—2	10460	10460
Library Media Center	1		10381	—2	10381	10381
Dining/Multi-Purpose	1		8765	—2	8765	8765
Food Service - Kitchen (CNV)	1		3926	—2	3926	3926
Custodial Service Center	1		420	—2	420	420
Faculty Center (3 Req'd)	3		900 2700	—2	2700	2700
Computer Center (2 Req'd)	2		1200 2400	—2	2400	2400
Itinerant Special Educat'n	1		330	—2	330	330
Teacher Center(s)	27		100 2700	—2	2700	2700
Optional Support Spaces **			0			0
PE Locker Shower	1		6830	—2	6830	6830
Staff Parking	Stalls	1/8	131	0		131
Visitor Parking	Stalls	LS	15	0		15
TOTAL CLRM CLASSROOM AI			71890			71890
TOTAL SUPT CLASSROOM AF			48912			48912
TOTAL SUPPORT AREA			120802			120802

Max Project Area = 120802

School Area = EDSPEC BUDGET $ PROJECT $

The Unit areas and ED SPEC areas shown on the School Summary and on the individual facility component area tables are net Educational Program and School Support floor areas and do not include area required for building structure, systems, service enclosures, auxiliary rooms, corridors, and passageways unless specifically shown otherwise in the tables.

- Comprehensive Student Support System (CSSS)	2300 sf
- Student Support Coordinator/Educational Assistant (SSC/EA)	330 sf
- Student Activities Room/Store/Storage	900 sf

Total FADS Program Area =	120,802
2% of FADS Program Area for Storage =	2,416
Total School Program Area =	123,218

Max Project Area = 120802

School Area = EDSPEC BUDGET $ PROJECT $

28 Pupil Activity Area	1	450	450				450
12 pupil Activity area	1	257	257				257
Individual activity area	1	78	78				78
Teacher station*	1	60	60				60
Circulation area*	1	135	135				135
							0
							0
Area General Classroom "A"			980				980

School Area = EDSPEC BUDGET $ PROJECT $

Max Project Area = 120802

School Area = EDSPEC BUDGET $ PROJECT $

Edspec GCR Area	1	980	980				980
							0
							0
							0
							0
Area General Classroom "B"			980				980

Edspec GCR Area	1	980	980				
Area General Classroom "C"			980				0

School Area = EDSPEC BUDGET $ PROJECT $

The number of supplemental portable classrooms will be reduced by number of type "B" classrooms selected.

Additions to type "C" classrooms do not alter anything (max area, any classroom count, etc.)

Max Project Area = 120802

School Area = EDSPEC BUDGET $ PROJECT $

Large Group Area	1	500	500				500
Small Group / Motor Develop	1	530	530				530
Technology	1	60	60				60
Craft/Woodwork Area	1	180	180				180
Home Living	1	120	120				120
Food Service	1	160	160				160
Restroom	2	70	140				140
Shower	1	50	50				50
Laundry	1	80	80				80
Teacher Station		60	60				60
Area of Self Contained Clrm			1880				1880
Lecture area	1	522	522				522
Small group activity area	1	458	458				458
							0
Area of Resource Classroom			980				980

School Area = EDSPEC BUDGET $ PROJECT $

Small Group Meeting	1	330	330				330
							0
							0
Area of Itinerant Services			330				330

Total All Itinerant Services	1		330	a To Support			330
Total All Self Contained	4		7520				7520
Total All Resource Services	9		8820				8820

School Area = EDSPEC BUDGET $ PROJECT $

School Area = EDSPEC BUDGET $ PROJECT $

Classroom-35 pupil	1	1225	1225				
Horticulture lab-35 pupil	1	1225	1225				
Fertilizer/insecticide room	1	80	80				
Equipment room	1	250	250				
Oil and gas storage room	1	80	80				
Area of Indoor Areas			2860				0

Max Project Area = 120802

School Area = EDSPEC BUDGET $ PROJECT $

Lath house (outdoor)	1	800	800				
Lumite Green house (outdoor)	1	1600	1600				
Mist house (outdoor)	1	100	100				
Composting	1	60	60				
Area of Outdoor Areas			2560				0

** Outdoor Area not Counted in Maximum School Area

School Area = EDSPEC BUDGET $ PROJECT $

School Area = EDSPEC BUDGET $ PROJECT $

32 pupil general purpose room	1	1600	1600				1600
Kiln room*	1	140	140				140
Storage	1	180	180				180
Computer Area	1	130	130				130
							0
							0
							0
							0

Max [illegible] Ar[illegible] 2080	NEW	[illegible]	[illegible]	[illegible]	[illegible]	NEW	[illegible]
COMPONENT [illegible]	Reqd Constr	Area	Area	Area	Area	Area	Area
[illegible]							0
[illegible]							0
Area of Art Education Clrm			2050				2050
Total of All Art Classrooms			2050				2050

School Area = EDSPEC BUDGET $ PROJECT $

Notes and Comments

[illegible]

School Area = EDSPEC BUDGET $ PROJECT $

[illegible]

[illegible]							
Classroom Area	1	980	980			[illegible]	
[illegible]							
Area of Gen Business Clrm			980				0

[illegible]							
Classroom Area	1	980	980			[illegible]	
[illegible]							
Area of Notetaking Clrm			980				0

Max Project Area = 120802	NEW	Unit	[illegible]	[illegible]	[illegible]	NEW	[illegible]
COMPONENT [illegible]	Const	Area	Area	Area	Area	Area	Area
[illegible]							
Classroom	1	1220	1220			[illegible]	1220
Storage Workroom	1	160	160			[illegible]	160
[illegible]							0
Area of Typing Clrm			1380				1380
Total of All Business Clrm			1380				1380

School Area = EDSPEC BUDGET $ PROJECT $

Notes and Comments

[illegible]

School Area = EDSPEC BUDGET $ PROJECT $

[illegible]

[illegible]							
Classroom/Dining Area	1	960	980			[illegible]	
Food Preparation Area	6	100	600			[illegible]	
Clothing and Textiles Area	1	370	370			[illegible]	
Home Furnishings Area	1	160	160			[illegible]	
Storage Room	1	140	140			[illegible]	
Laundry Room	1	60	60			[illegible]	
Computer Area (9 stations)	1	200	200				
General Utility Room	1	40	40				

Max [illegible] Ar[illegible] 2080	NEW	[illegible]	[illegible]	[illegible]	[illegible]	[illegible]	[illegible]
COMPONENT [illegible]	Const	Area	Area	Area	Area	Area	Area
[illegible]							
Area of Family & Consumer Science			2550				0
Total of Family & Consumer Science							0

School Area = EDSPEC BUDGET $ PROJECT $

Notes and Comments

[illegible]

School Area = EDSPEC BUDGET $ PROJECT $

[illegible]

[illegible]							
32 pupil classroom	1	980	980			[illegible]	
Office	1	100	100			[illegible]	
Supplies & parts room	1	75	75			[illegible]	
Bench metalwork area	1	1100	1100			[illegible]	
Hot metalwork area	1	130	130			[illegible]	
Machine toolwork area	1	570	570			[illegible]	
Project storage rooms	6	90	540			[illegible]	
Materials storage room	1	160	160			[illegible]	

Max Project Area = 120802	NEW	Unit	[illegible]	[illegible]	[illegible]	NEW	[illegible]
COMPONENT [illegible]	Reqd Const	Area	Area	Area	Area	Area	Area
Finishing room	1	120	120			[illegible]	
Compressor room	1	25	25			[illegible]	
Locker & restrooms:							
Girls' (16 pupil)	1	180	180			[illegible]	
Boys' (16 pupil)	1	180	180			[illegible]	
[illegible]							
Area of Manufacturing			4160				0
Total of Manufacturing							0

School Area = EDSPEC BUDGET $ PROJECT $

Notes and Comments

[illegible]

School Area = EDSPEC BUDGET $ PROJECT $

[illegible]

[illegible]							
32 pupil classrooms	1	980	980			[illegible]	
Office	1	100	100			[illegible]	
Supplies & parts room	1	75	75			[illegible]	
Bench woodwork area	1	1100	1100			[illegible]	
Machine woodwork area	1	700	700			[illegible]	
Project storage rooms	6	90	540			[illegible]	
Materials storage room	1	160	160			[illegible]	
Finishing room	1	120	120			[illegible]	

Max Project Area = 120802

COMPONENT	NEW	UNIT	SPACE				
Compressor room	1	25					
Locker & restrooms.							
Girls'	1	180	180				
Boys'	1	180	180				
Area of Building & Construction			4160				0

School Area = EDSPEC BUDGET $ PROJECT $

Area of Technology Lab		4160				4160

School Area = EDSPEC BUDGET $ PROJECT $

School Area = EDSPEC BUDGET $ PROJECT $

Technology Area	1	1800	1800			
Building Area	1	850	850			
Material Storage	1	240	240			
Teacher Stations	1	60	60			

School Area = EDSPEC BUDGET $ PROJECT $

Regular Lab (Clean)	1	2080	2080			2080
Technology Lab (Dirty)	1	2080	2080			2080

Max Project Area = 120802

COMPONENT	NEW	UNIT	SPACE				
Instrument practice room	3	115	345				345
Instrument ensemble room	1	300	300				300
Instrument repair & stor.	1	250	250				250
Band office / Library	1	185	185				185
Computer Area	1	150	150				150
Area of Band Room			3730				3730

School Area = EDSPEC BUDGET $ PROJECT $

			Share? (Elsewhere=1 / Here=2)				
Vestibule	1	160	160				160
Mechanical/Electrical room	1	Area by designer					
restroom (boys/girls)	2	200	400				400
Janitor's closet	1	40	40				40
							0
Area of Common Facilities			600				600

Area of Common Facilities	1	600	600			600
Area of Choral Room		1925	0			0
Area of Band Room	2	3730	7460			7460

School Area = EDSPEC BUDGET $ PROJECT $

Max Project Area = 120802

COMPONENT	NEW	UNIT	SPACE				
Area of Industrial Tech Lab			2950				0

School Area = EDSPEC BUDGET $ PROJECT $

School Area = EDSPEC BUDGET $ PROJECT $

			Share? (1=Elsewhere / 2=Here)				
80 pupil main choral room	1	1440	1440				
Choral office / Library	1	185	185				
Robe Building & Construction	1	150	150				
Computer Area	1	150	150				
Area of Choral Room			1925				0

			Share? (1=Elsewhere / 2=Here)				
100 pupil main instrument room	1	2500	2500				2500

School Area = EDSPEC BUDGET $ PROJECT $

Max Project Area = 1

COMPONENT	Qty	Area					
School Area = EDSPEC	BUDGET $		PROJECT $				

26 Pupil Classroom / Lab	1	1460	1460			1460
Teacher prep room	1	160	160			160
Computer Area	1	130	130			130
						0
Area of Classroom / Lab			1750			1750
Total of All Science Clrm			10500			10500

Max Project Area = 120802

COMPONENT	Qty	NEW Area					
			Lath Houses Selected by School >				
Lath House	1	270	270				270
							0
Area of Lath House			270				270
** Lath House Area not Counted in Maximum School Area							
Total of All Lath House			1620				1620

School Area = EDSPEC BUDGET $ PROJECT $

School Area = EDSPEC BUDGET $ PROJECT $

Maximum Classroom Area	1	2260	2260			

Max Project A 120

COMPONENT	Qty	Area					
Area of Optional Science			2260				0

School Area = EDSPEC BUDGET $ PROJECT $

School Area = EDSPEC BUDGET $ PROJECT $

Total Area of Optional Program Clrm						0

School Area = EDSPEC BUDGET $ PROJECT $

Max Project Area = 120802

COMPONENT	Qty	Area					
Total Area of Optional Program Clrm							0

School Area = EDSPEC BUDGET $ PROJECT $

School Area = EDSPEC BUDGET $ PROJECT $

	1050		If this is a Satellite Enter 0.01>>			
Principal's office	1	200	200			200
Vice-Principal's office	2	200	400			400
YRE-MT Vice-Principal's office	1	200	200			200
General office	1	420	420			420
YRE-MT Clerk	3	100	300			300
FMS	1	100	100			100
Duplicating room	1	130	130			130
Storage room	1	240	240			240
Lobby	1	240	240			240

Max Project Area = 120802

COMPONENT	Qty	Area					
Staff conference room	1	240	240				240
Registrar's Office	1	120	120				120
Registrar's Workroom	1	600	600				600
Health service			0				
Treatment room	1	170	170				170
Recovery room	1	250	250				250
Nurse's station/waiting area	1	150	150				150
Restroom w/ Shower	1	90	90				90

School Area = EDSPEC BUDGET $ PROJECT $

Counselor's office	6	140	840			840
Special Services / Conf. Room	1	260	260			260
Student Activities Coordinator	1	140	140			140
Student Activity Room	1	900	900			900
Student Activity Store	1	120	120			120
Staff lounge	1	190	190			190
Staff restroom	2	70	140			140
Custodial closet	1	40	40			40
Hallway/waiting alcove	1	740	740			740
PCNC	1	350	350			350
CSSS	1	2300	2300			2300
SSC/EA	1	330	330			330
Communications Room	1	60	60			60
Mechanical/Electrical Room	1	Area by designer				
SSC/EA Office	1	200	200			200
			0			0
			0			0
Total Area of Main Suite			10400			10400

School Area = EDSPEC BUDGET $ PROJECT $

Comprehensive Student Support System (CSSS) suggested components:

- Two conference rooms @ 320 sf/ea 640 sf
- Five offices @ 170 sf/ea 850 sf

ix Pr	Area	802					
COMPONENT							
- Reception / work/ storage area @ 490 sf/ea					490 sf		
- Restrooms 2 @ 60 sf/ea					120 sf		
- Circulation @ 260 sf/ea					200 sf		
				Total	2300 sf		

Student Support Coordinator / Educational Assistant Room (SSC/EA) 330 sf

School Area = EDSPEC BUDGET $ PROJECT $

		1050		If this is a Satellite Enter 0.01>>			
	Design Enrollment (DE)	1050					
	Stucent dining room	1	7200	7200			7200
	0-300 3600						

	301-600 LEx12						
	601-1200 7200						
	1201-up DE*6						
	Portable stage area		480	0			0
	Superimposed on dining Rm						
	Stage storage	1	250	250			250
	Ramp/chair storage	1	200	200			200
	Amplifier area	1	20	20			20
	Hallway	1	120	120			120
	Boy's dressing/storage room	1	180	180			180
	Girl's dressing/storage room	1	180	180			180
	Boy's restroom	1	70	70			70
	Girl's restroom	1	70	70			70
	Custodial closet	1	40	40			40
	Staff dining room	1	435	435			435

School Area = EDSPEC BUDGET $ PROJECT $

				If this is a Satellite Enter 0.01>>			
	Offstor./repair area	1	230	230			230
	Locker area	1	40	40			40
	Tool room	1	60	60			60
	Restroom w/ Shower	1	90	90			90
							0

	Total Area Custodial Service			420			420
	Total Area Cafe/Multipurpose			8765			8765

School Area = EDSPEC BUDGET $ PROJECT $

				If this is a Satellite Enter 0.01>>			
	SERVICE/DELIVERY	CONV					
	Food preparation area	1	1100	1100			1100
	Dry Storage	1	400	400			400
	Walk-in Refrigerator	1	120	120			120
	Walk-in Freezer	1	140	140			110
	Serving area	1	768	768			768

Max Project Area = 120802							
COMPONENT							
Tray Return Area	1	720	720				720
Can Wash Area	1	50	50				50
Pot & Pan Area #1	1	128	128				128
Pot & Pan Area #2			—				—
Transport Cart Storage Area			—				—
Office	1	100	100				100
Lockers and restrooms	2	100	200				200
Utility and broom linen closet	1	200	200				200
Heater, El, & Compressor Rms	3	Area by designer					
			0				0

School Area = EDSPEC BUDGET $ PROJECT $

School Area = EDSPEC BUDGET $ PROJECT $

				If this is a Satellite Enter 0.01>>			
	Office	1	248	248			248
	Large group area:						
	Circulation desk	1	286	286			286
	Reading/study/bookstack	1	4489	4489			4489
	Periodical	1	266	266			266

Max Project Area = 120802							
COMPONENT							
Resource Centers	3	550	1650				1650
Student conference	1	252	252				252
Video Production Room			0				0
Workroom/production room	1	800	800				800
Prof Staff & mat. area	1	336	336				336
Storage room	1	324	324				324
Mechanical & Electrical room	2	Area by designer					
Custodial closet	1	40	40				40
Staff restroom	2	70	140				140
Media Control / Signal Process	1	600	600				600
Tech coordinator's office	1	300	300				300
Multi/Media production room	1	650	650				650
							0
			0				0

School Area = EDSPEC BUDGET $ PROJECT $

School Area = EDSPEC BUDGET $ PROJECT $.

	Work area	1	230	230			230
	Lounge area	1	150	150			150
	Gen. Clrm. storage room	1	380	380			380
	Staff restrooms	2	70	140			140

Max Project Area = 120802

							0
							0
							0
Area of Faculty Center				900			900

School Area = EDSPEC BUDGET $ PROJECT $

School Area = EDSPEC BUDGET $ PROJECT $

Group activity area	4	200	800				800
Common activity area	1	200	200				200
Circulation area	1	200	200				200

Max Project Area = 120802

							0
							0
Area of Computer Center				1200			1200

School Area = EDSPEC BUDGET $ PROJECT $

School Area = EDSPEC BUDGET $ PROJECT $

Teacher work stations (Each)		60	0				
Conference room (/ Station)	1	20	0				
Storage (/ Station)	1	50	0				
Area of Teacher Center	130 SF / Tchr		0				0

Max Project Area = 120802

Teacher work stations (Each)		60	0				
Conference room (Each)	1	20	0				
Storage (Each)	1	50	0				
Area of Teacher Center	130 SF / Tchr		0				0

SCHOOL SPEC PROVIDES 100 SQ FT OF TEACHER CENTER / TEACHER

School Area = EDSPEC BUDGET $ PROJECT $

Number of Stations is based on —bThree (3) Track Schedule" with —b525 students in each Tracks .Attending at any one time.

School Area = EDSPEC BUDGET $ PROJECT $

			0				0
			0				0
			0				0
Total Area of Optional Space			0				0

Max Project Area = 120802

Total Area of Optional Space				0			0

				0			0

School Area = EDSPEC BUDGET $ PROJECT $

School Area = EDSPEC BUDGET $ PROJECT $

Locker room	1	1040	1040				1040
Individual Shower Stall	24	40	960				960
Shower booth (ADA)	1	60	60				60

Project = 12							
COMPONENT	Const	Area	Area			Area	Area
PE office	1	100	100				100
Faculty/locker/shower/restroom	1	100	100				100
restroom	1	150	150				150
Towel/supply stor	1	250	250				250
General storage	1	275	275				275
Janitor's closet	1	40	40				40
Circulation area	1	300	300				300
							0
							0
Area of Girls PE Lckr / Shwr			3275				3275
School Area = EDSPEC	BUDGET $			PROJECT $			

Locker room	1	1040	1040				1040
Individual Shower Stall	24	40	960				960
Shower booth (ADA)	1	60	60				60
PE office	1	100	100				100
Faculty/locker/shower/restroom	1	100	100				100
restroom	1	150	150				150
Towel/supply stor	1	250	250				250
General storage	1	275	275				275
Janitor's closet	1	40	40				40
Circulation area	1	300	300				300
							0
							0
Area of Boys PE Lckr / Shwr			3275				3275
School Area = EDSPEC	BUDGET $			PROJECT $			

Laundry room	1	160	160				160
Heater & Electrical room	2	Area by designer					
First-Aid room	1	120	120				120
							0

Max Project Area = 120802							
COMPONENT							
							0
Area of Comm PE Lckr / Shwr			280				280
Area of Girls PE Lckr / shwr			3275				3275
Area of Boys PE Lckr / shwr			3275				3275
Total Area of PE Lckr / Shwr			6830				6830
School Area = EDSPEC	BUDGET $			PROJECT $			

A-15

Sch...	rea =	PEC	BUD		JEC
MEDIAN ANNUAL RAINFALL		21			

Playfield "A"	1	90000	90000			90000	90000
Playfield "B"	1	75000	75000			75000	75000

Max Project Area = 120802							
COMPONENT	Const	Area	Area			Area	Area
Playcourt	1	10368	10368			10368	10368
Covered Playcourt	1	10368	10368			10368	10368
Storage	1	1230	1230			1230	1230
Area of Outdoor Facilities			3696				3696
School Area = EDSPEC	BUDGET $			PROJECT $			

Playcourts to be located on school site

Playfields may be located on adjacent city and county park site

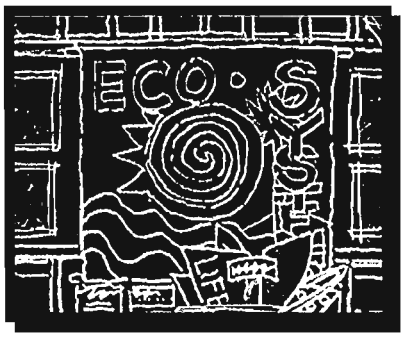

COMPARISON OF FADS & PROPOSED SPACE ALLOCATIONS

2005 Fads TYPE/COMPONENT	Original Number	Unit AreaSF	Fads Area	NEW OR REVISED TYPE/COMPONENT	Number	Unit Area Sq. Ft.	Revised FADS	Clsrm. Count	Tradeoff Recap	Remarks
School Name: Ewa Makai Middle School				School Name: Ewa Makai Middle School						
Design Enrollment	1050			Design Enrollment	1050					
Regular Enrollment	892			Regular Enrollment	892					
Special Ed @ 15% of D.E.	158			Special Ed @ 15% of D.E.	158					
General Classrooms	25	18+4PE+2Hlth+1Gr6		General Classrooms	27	9 Teams of 3(LA, SS & Math)= 27 = 18(6 ea.of LA, SS, M)+2 PE+2 Health +1 Gr 6 + 4 SpEd Resource Clsrms)				
Arts/BPA Classrooms	4			Arts/BPA Classrooms	5	1Art, 1BusEd, 1 Industrial Tech (downsized for trade offs), 2 Music (downsize 2nd Band to Choral for trade offs)				
Science Classrooms	6			Science Classrooms	9	start with (6 Science @ 1,750) + (3 SpEd Resource @ 980) & redistribute for 9 total Science Rms				
Max. Adjustment (1 add'l BPA)	1			PE Classrooms	2	1 of which is designated for Fitness (traded 2 to use as Generals for core neighborhoods)				
Special Education (FSC)	4			Special Education (FSC)	4	downsized from 4 @ 1880 to 4 @ 1,380 (3 FSC, 1 to house CSAP) 'extra' traded to Resource Rooms				
Special Education (Resource)	9			Special Education (Resource)		from original classroom count 9: 4 (Generals in cores) - 3 (for science) = 2 *lost (52 instead of 54)				
						9 new Resource Rms @ 600sf (not in Clsrm Count, will provide home base for each Core Team SpEd Resource Teacher)				
						SF for 9 smaller rms from remaining 2 Resource Clsrms + trade offs in SpEd FSC and Music				
5 Supplemental (Perm.)	5			Supplemental Classrooms	5	1 General, 1 Family/Consumer Science (980+920 from Indus Tech), 1 Dance (980+980 from Indus Tech), 1 Art				
Permanent Classrooms	**54**			**Permanent Classrooms**	**52**	(Additional Art=980 +220 from Music), 1 Virtual Reality (980+220 from Music)				
Peak Portables	5			Peak Portables	5					
Total - All Classrooms	59			Total - All Classrooms	57					
Staff Parking	131									
Visitor Parking	15									
Total Parking	146			Proposed Parking Count						
(DOE Req'ments, Consultant to verify design w/ C&C req'ments)										
CLASSROOMS				CLASSROOMS						
General Classroom "A"	25			General Classroom "A"	27			27		trade off: 2 Health, 2 PE & 1 6th Grade Adj. + 4 Resource Clsrms
(6 LA, 6 SS, 6 Math, 4 PE, 2 Health, 1 6th Grade Adj.)				(9 LA, 9 SS, 9 Math-with free periods to use for electives/exploratory wheel classes to total 27 General Classrooms						
28 Pupil Activity Area	1	450	450	28 Pupil Activity Area	1	450	450			
12 Pupil Activity Area	1	257	257	12 Pupil Activity Area	1	257	257			
Individual Activity Area	1	78	78	Individual Activity Area	1	78	78			
Teacher Station	1	60	60	Teacher Station	1	60	60			
Circulation Area	1	135	135	Circulation Area	1	135	135			
Area of Gen. Clsrm. "A"			980	Area of Gen. Clsrm. "A"			980			
Area of All Gen. Clsrm. A	**25**	**980**	**24500**	**Area of All Gen. Clsrm. A**			**26,460**		-3,920	trade off SF= +3,420 (from Resource) + 500 (from SpEd FSC)
				2 PE General Classrooms	**2**			**2**		
				1 PE Classroom	1	980	980			
				1 PE Fitness Room	1	980	980			
				Area of All PE Classrooms			**1,960**			

2005 Fads TYPE/COMPONENT	Original Number	Unit AreaSF	Fads Area	NEW OR REVISED TYPE/COMPONENT	Number	Unit Area Sq. Ft.	Revised FADS	Clsrm. Count	Tradeoff Recap	Remarks
Supplemental Classrooms				**Summary of Supplemental Classrooms**						
General Classroom "B"	5			**General Classroom "B"**	5					
area descriptions same as	1	980	980	Family & Consumer Science	1	1,900	1,900	*		980 General + 920 (from Industrial Tech)
General Classroom "A" unless identified as different type-				Dance & Performance	1	1,960	1,960	*		980 General + 980 (from Industrial Tech)
then see revised listing w/ area breakdown under new name				General (CSAP or elective)	1	980	980	1		
Area of Gen. Clsrm. "B"			980	Art Classroom	1	1,200	1,200	*		980 General + 220 (from Band downsizing to Choral)
				Virtual Reality Classroom	1	1,200	1,200	*		980 General + 220 (from Band downsizing to Choral)
Area-All Gen. Clrm. B/C	**5**	**980**	**4900**	**Area of General Supplementals**			**980**	(*see individual room descriptions for rooms w/SF above 980 SF)		
Special Education	**13**			**Special Education**	**13**					
Self Contained Classrooms	**4**			**Self Contained Classrooms**	**4**			**4**		3 to be used as FSC (Fully Self Contained SpEd Classrooms
Large Group Area	1	500	500	Large Group Area (&....)	1	610	610			4th to be used for CSAP (Comprehensive School Alienation Program)
Small Group/Motor Developm.	1	530	530	Small Group/Motor Developm	combined w/ Large Group					
Technology	1	60	60	Technology	1	60	60			
Craft/Woodwork Area	1	180	180	Craft/Woodwork Area (&. .)	1	300	300			
Home Living	1	120	120	Home Living	combined w/ Large Group					
Food Service	1	160	160	Food Service	combined w/ Large Group					
Restroom	2	70	140	Restroom	2	70	140			
Shower	1	50	50	Shower	1	50	50			
Laundry	1	80	80	Laundry	1	80	80			
Teacher Station	1	60	60	Teacher Station	2	60	120			
Area of Self Contained Clsrm.			1880	Area of Self Contained Clsrm.			1,360		+2,080	trade off SF (-500 to Core Clsrms, -1,580 to add'l Science)
Resource Services Clsrm	**9**			**Resource Services**	**9**			*		Resource Rms not counted in Classroom count due to smaller SF
Lecture Area	1	522	522	Lecture / Small Group	1	480	480			980 SF from 7 Resource rooms traded to provide 4 more General
Small Group Activity Area	1	458	458	Technology	1	60	60			Classrooms and extra SF for 3 more Science Rooms
				Teacher Station	1	60	60			
Area of Resource Classroom			980	Area of Resource Classroom			600		+3,420	trade off SF (-3,420 to General Core Classrooms)
Itinerant Services Room	**1**			**Itinerant Services Room**	**1**					
Small Group Meeting	1	330	330	Small Group Meeting	1	330	330			
Area of Itinerant Services			330	Area of Itinerant Services			330			
*Total All Itinerant Services	1	330	330	*Total All Itinerant Services	1	330	330			
Total All Self Contained	4	1,880	7520	Total All Self Contained	4	1,360	5,440			
Total All Resources Services	9	980	8820	Total All Resources Services	9	600	5,400			
Total All* Special Education	**13**		**16340**	**Total All* Special Education**			**10,840**			
*Itinerant SF counted as Support Area				*Itinerant SF counted as Support Area						

2005 Fads TYPE/COMPONENT	Original Number	Unit AreaSF	Fads Area	NEW OR REVISED TYPE/COMPONENT	Number	Unit Area Sq. Ft.	Revised FADS	Clsrm. Count	Tradeoff Recap	Remarks
Art and BPA Classrooms				**Art / BPA / Electives / Specialty Classooms:**						
Agriculture Arts	0			**Art Education Classroom**	1					2nd Art Room = one of 5 Supplemental Clsrms at 980 SF
Agriculture Arts Classroom	0			Instructional Area	1	1,000	1,000			
				Teacher Station	1	60	60			
				Storage	1	140	140			
				Area of Art Education Clasrm.			1,200		-220	trade off SF = +220 (from Band downsizing to Choral)
Art Education	1									
Art Education Classroom	1			**Art Education Classroom**	1					
32 Pupil General Purpose Rm.	1	1,600	1600	32 Pupil General Purpose Rm	1	1,600	1,600			
Kiln Room	1	140	140	Kiln Room	1	140	140			
Storage	1	180	180	Storage	1	180	180			
Computer Area	1	130	130	Computer Area	1	130	130			
Area of Art Education Clasrm.	1		2050	Area of Art Education Clasrm.			2,050			No change from original FADS
Total of All Art Classrooms	1	2050	2050	**Total - All Art Classrooms**	2		3,250	2		
Business Education	1									
General Business Classroom	0									
Note Taking Classroom	0									
Keyboard/Typing Clsrm.	1			**Business Ed Classroom**	1					
Classroom	1	1,220	1220	Instructional + Teacher Station	1	1,220	1,220			
Storage Workroom	1	160	160	Storage Workroom	1	160	160			
Area of Typing Classroom	1		1380	Area of Business Classroom			1,380			No change from original FADS
Total-All Bus. Ed Clsrm.	1	1380	1380	**Total-All Bus. Ed Clsrm.**	1	1,380	1,380	1		
Family/Consumer Science	0			**Family/Consumer Science**	1					Added as one of the 5 Supplemental Classrooms at 980 SF
Family/Cons. Sc. Clsrm.	0			Instructional Area	1	1,600	1,600			
				Teacher Station	1	60	60			
Technology Education	1			Technology	1	60	60			
Manufacturing	0			Storage Room	1	180	180			
Building and Construction	0			Area of Family & Consumer Science			1,900		-920	trade off SF = +920 from Industrial Tech
Industrial Technology Lab	0			**Total-All Family/Cons. Sci.**	1		1,900	1		
Technology Lab	1			**Technology Lab**	1					
R & D Lab (Clean)	1	2,080	2080	Lab(Computer/Robotics/Tech)	1	2,000	2,000			
Prototype Lab (Dirty)	1	2,080	2080	Teacher Station	1	60	60			
				Storage Room	1	200	200			
Area of Technology Lab	1		4160	Area of Technology Lab			2,260			
Total-All Ind. Technology	1	4160	4160	**Total-All Ind. Technology**	1		2,260	1	+1,900	trade off SF (-920 to Family/Cons. Sci., -980 to Dance)

2005 Fads TYPE/COMPONENT	Original Number	Unit AreaSF	Fads Area	NEW OR REVISED TYPE/COMPONENT	Number	Unit Area Sq. Ft.	Revised FADS	Clsrm. Count	Tradeoff Recap	Remarks
Music (Choral & Band)	1			**Music**						
Choral Room	0			**Choral Room**	1					originally 2 Band Rms 1 traded for Choral & add'l SF for trade offs
				80 Pupil Main Choral Room	1	1,440	1,440			
Band Room	2			Choral Office & Library	1	185	185			
100 Pupil Main Instrument Rm	1	2,500	2500	Robe Building & Construction	1	150	150			
Instrument Practice Room	3	115	345	Computer Area	1	150	150			
Instrument Ensemble Room	1	300	300	Area of Choral Room			1,925			
Instrument Repair & Storage	1	250	250	**Band Room**	1					
Band Office/Library	1	185	185	100 Pupil Main Instrument Rm.	1	2,500	2,500			
Computer Area	1	150	150	Instrument Practice Room	3	115	345			
Area of Band Room	1		3730	Instrument Ensemble Room	1	300	300			
				Instrument Repair & Storage	1	250	250			
Common Facilities	1			Band Office/Library	1	185	185			
Vestibule	1	160	160	Computer Area	1	150	150			
Mechanical/Electrical Room	1		by designer	Area of Band Room			3,730			
Restroom (boys/girls)	2	200	400	**Common Facilities**	1					
Janitor's Closet	1	40	40	Vestibule	1	160	160			
Area of Common Facilities	1	600	600	Mechanical/Electrical Room	1		by designer			
				Restroom (boys/girls)	2	200	400			
Area of Common Facilities	1	600	600	Janitor's Closet	1	40	40			
Are of Choral Room	0	1,925	0	Area of Common Facilities			600			
Area of Band Room	2	3,730	7460							
Total of All Music	2		8060	**Total of All Music**	2		6,255	2	+1,805	trade off SF (-220 2nd Art, -220 Virtual Reality, -1,365 for add'l Sci.)
Gen. Science Clsrm./Lab	6			**Gen. Science Clsrm./Lab**	9					
28 Pupil Classroom/Lab	1	1,460	1460	28 Pupil Classroom/Lab	1	1,254	1,254			9 Science Labs required for 9 Teams, and use for electives
Teacher Prep Room	1	160	160	Technology	1	60	60			Clsrm/Labs downsized from 1,750 to 1,495 and trade off SF added
Computer Area	1	130	130	Teacher Station	1	60	60			
Area of Classroom/Lab	1		1750	Teacher Prep Room	1	120	120			
				Area of Science Clsrm/Lab			1,494			
Total-All Science Clsrm.	6	1750	10500	**Total of All Science Clsrm/Labs**			13,446	9	-2,946	trade off SF = +1,580 (from SpEd FSC) +1,365 (from Music) +1add'l SF from

2005 Fads TYPE/COMPONENT	Original Number	Unit AreaSF	Fads Area	NEW OR REVISED TYPE/COMPONENT	Number	Unit Area Sq. Ft.	Revised FADS	Clsrm. Count	Tradeoff Recap	Remarks
				Dance & Performance Arts	1					one of 5 Supplemental Classrooms at 980 SF
				Instructional Area	1	1,700	1,700			
				TeacherStation	1	60	60			
				Technology	1	60	60			
				Storage	1	140	140			
				Area of Dance/Perf. Clsrm			1,960			
				Area of Dance/Perf. Clsrm			1,960	1	-980	trade off SF = +980 SF (from Industrial Tech)
				Virtual Reality Classroom	1					one of 5 Supplemental Classrooms at 980 SF
				Instructional Area	1	1,000	1,000			
				Teacher Station	1	60	60			
				Storage	1	140	140			
				Area of Virtual Reality Room			1,200			
				Area of Virtual Reality Room			1,200	1	-220	trade off SF = +220 (from downsizing Band to Choral)
Subtotal - All Classrooms	54		71890	Subtotal - All Classrooms			71,891	52	-1	extra 1 SF needed for Science Classroom/Labs

2005 Fads TYPE/COMPONENT	Original Number	Unit AreaSF	Fads Area	NEW OR REVISED TYPE/COMPONENT	Number	Unit Area Sq. Ft.	Revised FADS	Clsrm. Count	Tradeoff Recap	Remarks
SUPPORT AREA										
Administrative Center	1			Administrative Center	1					
Principal's Office	1	200	200	Principal's Office	1	200	200			
Vice Principal's Office	2	200	400	Vice Principal's Office	2	200	400			
YRE-MT Vice Principal's Off.	1	200	200	YRE-MT Vice Principal's Off	1	200	200			
General Office	1	420	420	General Office	1	420	420			
YRE_MT Clerk	3	100	300	YRE_MT Clerk	3	100	300			
FMS	1	100	100	FMS	1	100	100			
Duplicating Room	1	130	130	Duplicating Room	1	130	130			
Storage Room	1	240	240	Storage Room	1	240	240			
Lobby	1	240	240	Lobby	1	240	240			
Staff Conference Room	1	240	240	Staff Conference Room	1	240	240			
Registrar's Office	1	120	120	Registrar's Office	1	120	120			
Registrar's Workroom	1	600	600	Registrar's Workroom	1	600	600			
Health Services:				Health Services						
Treatment Room	1	170	170	Treatment Room	1	170	170			
Recovery Room	1	250	250	Recovery Room	1	250	250			
Nurse's Station/Waiting Area	1	150	150	Nurse's Station/Waiting Area	1	150	150			
Restroom w/ Shower	1	90	90	Restroom w/ Shower	1	90	90			
Counselor Office	6	140	840	Counselor Office	6	140	840			
Special Services/Conf. Room	1	260	260	Special Services/Conf. Room	1	260	260			
Student Activities Coord (SAC)	1	140	140	Student Activities Coord.(SAC)	1	140	140			
Student Activity Room	1	900	900	Student Activity Room	1	900	900			
Student Activity Store	1	120	120	Student Activity Store	1	120	120			
Staff Lounge	1	190	190	Staff Lounge	1	190	190			
Staff Restroom	2	70	140	Staff Restroom	2	70	140			
Custodial Closet	1	40	40	Custodial Closet	1	40	40			
Hallway/Waiting Alcove	1	740	740	Hallway/Waiting Alcove	1	740	740			
PCNC	1	350	350	PCNC	1	350	350			
CSSS	1	2,300	2300	CSSS	1	2,300	2,300			
Offices										
Conf Rms										
SSC/EA	1	330	330	SSC/EA	1	330	330			
Communications Room	1	60	60	Communications Room	1	60	60			
Mechanical/Electrical Room	1		by designer	Mechanical/Electrical Room	1		by designer			
Safety Office	1	200	200	Safety Office	1	200	200			
Total Area-Admin. Center	1		10460	Total Area-Admin. Center	1		10,460			

2005 Fads TYPE/COMPONENT	Original Number	Unit AreaSF	Fads Area	NEW OR REVISED TYPE/COMPONENT	Number	Unit Area Sq. Ft.	Revised FADS	Clsrm. Count	Tradeoff Recap	Remarks
Dining/Multi-Purpose	1			**Dining/Multi-Purpose**	1					
Student Dining Room (DE=1050)	1	7,200	7200	Student Dining Rm (DE=1050)	1	7,200	7,200			
Portable Stage -Superimposed on Dining Rm.				Portable Stage -Superimposed on Dining Rm.						
Stage Storage	1	250	250	Stage Storage	1	250	250			
Ramp/Chair Storage	1	200	200	Ramp/Chair Storage	1	200	200			
Amplifier Area	1	20	20	Amplifier Area	1	20	20			
Hallway	1	120	120	Hallway	1	120	120			
Boy's Dressing/Storage Room	1	180	180	Boy's Dressing/Storage Room	1	180	180			
Girl's Dressing/Storage Room	1	180	180	Girl's Dressing/Storage Room	1	180	180			
Boys' & Girls' Restrooms	2	70	140	Boys' & Girls' Restrooms	2	70	140			
Custodial Closet	1	40	40	Custodial Closet	1	40	40			
Staff Dining Room	1	435	435	Staff Dining Room	1	435	435			
Total Area of Cafeteria/M.P.			8765	Total Area of Cafeteria/M.P.			8,765			
Custodial Service Center	1			**Custodial Service Center**	1					
Office/Storage/Repair Area	1	230	230	Office/Storage/Repair Area	1	230	230			
Locker Area	1	40	40	Locker Area	1	40	40			
Tool Room	1	60	60	Tool Room	1	60	60			
Restroom w/Shower	1	90	90	Restroom w/Shower	1	90	90			
Total Area of Cust. Serv. Cent.			420	Total Area of Cust. Serv. Cent.			420			
Total Area-Café/Custod.			9185	**Total Area-Café/Custod.**			9,185			
Food Service - Kitchen	1			**Food Service - Kitchen**	1					
Food Preparation Area	1	1,100	1100	Food Preparation Area	1	1,100	1,100			
Dry Storage	1	400	400	Dry Storage	1	400	400			
Walk-in Refrigerator	1	120	120	Walk-in Refrigerator	1	120	120			
Walk-in Freezer	1	140	140	Walk-in Freezer	1	140	140			
Serving Area	1	768	768	Serving Area	1	768	768			
Tray Return Area	1	720	720	Tray Return Area	1	720	720			
Can Wash Area	1	50	50	Can Wash Area	1	50	50			
Pot & Pan Area #1	1	128	128	Pot & Pan Area #1	1	128	128			
Pot & Pan Area #2	-	-	0	Pot & Pan Area #2	-	-	0			
Transport Cart Storage Area	-	-	0	Transport Cart Storage Area	-	-	0			
Office	1	100	100	Office	1	100	100			
Lockers and Restooms	2	100	200	Lockers and Restooms	2	100	200			
Utility and Broom-Linen Closet	1	200	200	Utility and Broom-Linen Closet	1	200	200			
Heater, Elec. & Compressor Rm	3		By Designer	Heater, Elec. & Compressor Rm	3		By Designer			
Total Area of Kitchen			3925	**Total Area of Kitchen**			3,925			
Library Media Center	1			**Library Media Center**	1					
Office	1	248	248	Office	1	248	248			
Large Group Area:				Large Group Area:						
Circulation Desk	1	286	286	Circulation Desk	1	286	286			

2005 Fads TYPE/COMPONENT	Original Number	Unit AreaSF	Fads Area	NEW OR REVISED TYPE/COMPONENT	Number	Unit Area Sq. Ft.	Revised FADS	Clsrm. Count	Tradeoff Recap	Remarks
Reading/Study/Bookstack	1	4,489	4489	Reading/Study/Bookstack	1	4,489	4,489			
Periodical	1	266	266	Periodical	1	266	266			
Resource Centers	3	550	1650	Resource Centers	3	550	1,650			
Student Conference	1	252	252	Student Conference	1	252	252			
Workroom/Production Office:	1	800	800	Workroom/Production Office:	1	800	800			
Prof. Staff & Materials Area	1	336	336	Prof. Staff & Materials Area	1	336	336			
Storage Room	1	324	324	Storage Room	1	324	324			
Mechanical & Electrical Room	2	-	By Designer	Mechanical & Electrical Room	2	-	By Designer			
Custodial Closet	1	40	40	Custodial Closet	1	40	40			
Staff Restroom	2	70	140	Staff Restroom	2	70	140			
Medial Control/Signal Process	1	600	600	Medial Control/Signal Process	1	600	600			
Tech Coordinator's Office	1	300	300	Tech Coordinator's Office	1	300	300			
Multi-Media Production Room	1	650	650	Multi-Media Production Room	1	650	650			
Total Area of Library Media Center			10381	**Total Area of Library Media Center**			10,381			
Faculty Center	3			**Faculty Center**	3					
Work Area	1	230	230	Work Area	1	230	230			
Lounge Area	1	150	150	Lounge Area	1	150	150			
Gen. Clrm. Storage Room	1	380	380	Gen. Clrm. Storage Room	1	380	380			
Staff Restrooms	1	140	140	Staff Restrooms	2	70	140			
Area of Faculty Center			900	Area of Faculty Center			900			
Total - All Faculty Centers	3	900	2700	**Total - All Faculty Centers**	3	900	2,700			
Teacher Center (YRE-MT)	27			**Teacher Center (YRE-MT)**	3					
Area of Teacher Center	1	100	100	Conf Area	1	240	240			
Per School EDSPEC				YRE-MT 20 Teacher Area	1	480	480			
				YRE-MT Cart Storage	1	180	180			
				Area of Teacher Center			900			
Total Area-Teacher Center	27	100	2700	**Total Area-Teacher Center**	3	900	2,700			

2005 Fads TYPE/COMPONENT	Original Number	Unit AreaSF	Fads Area	NEW OR REVISED TYPE/COMPONENT	Number	Unit Area Sq. Ft.	Revised FADS	Clsrm. Count	Tradeoff Recap	Remarks
Computer Resource Center	2			**Computer Resource**	2					
Group Activity Area	4	200	800	Group Activity Area	4	200	800			
Common Activity Area	1	200	200	Common Activity Area	1	200	200			
Circulation Area	1	200	200	Circulation Area	1	200	200			
Area of Computer Center			1200	Area of Computer Center			1,200			
Total Area-Computer Cent.	2	1,200	2400	**Total Area-Computer Cent.**	2	1,200	2,400			
PE Locker/Shower (Girls)	1			**PE Locker/Shower (Girls)**	1					
Locker Room	1	1,040	1040	Locker Room	1	1,040	1,040			
Individual Shower Stalls	24	40	960	Individual Shower Stalls	24	40	960			
Shower Booth (ADA)	1	60	60	Shower Booth (ADA)	1	60	60			
PE Office	1	100	100	PE Office	1	100	100			
Faculty/Locker/Shwr./Restrm	1	100	100	Faculty/Locker/Shwr./Restrm	1	100	100			
Restroom	1	150	150	Restroom	1	150	150			
Towel/Supply Storage	1	250	250	Towel/Supply Storage	1	250	250			
General Storage	1	275	275	General Storage	1	275	275			
Janitor's Closet	1	40	40	Janitor's Closet	1	40	40			
Circulation Area	1	300	300	Circulation Area	1	300	300			
Area of Girl's PE Lckr/Shwr			3275	Area of Girl's PE Lckr/Shwr.			3,275			
PE Locker/Shower (Boys)	1			**PE Locker/Shower (Boys)**	1					
Locker Room	1	1,040	1040	Locker Room	1	1,040	1,040			
Individual Shower Stalls	24	40	960	Individual Shower Stalls	24	40	960			
Shower Booth (ADA)	1	60	60	Shower Booth (ADA)	1	60	60			
PE Office	1	100	100	PE Office	1	100	100			
Faculty/Locker/Shwr./Restrm.	1	100	100	Faculty/Locker/Shwr./Restrm	1	100	100			
Restroom	1	150	150	Restroom	1	150	150			
Towel/Supply Storage	1	250	250	Towel/Supply Storage	1	250	250			
General Storage	1	275	275	General Storage	1	275	275			
Janitor's Closet	1	40	40	Janitor's Closet	1	40	40			
Circulation Area	1	300	300	Circulation Area	1	300	300			
Area of Boy's Lockr./Shwr.			3275	Area of Boy's Lockr./Shwr.			3,275			
PE Lckr./Shwr. Commons	1			**PE Lckr./Shwr. Commons**	1					
Laundry Room	1	160	160	Laundry Room	1	160	160			
Heater & Electric Room	2		By Designer	Heater & Electric Room	2		By Designer			
First-Aid Room	1	120	120	First-Aid Room	1	120	120			
Area of Commons - PE Lckr./S	1		280	Area-Commons - PE Lckr./S	1		280			
Total Area of PE Lckr./Shwr.	1		6830	**Total Area of PE Lckr./Shwr.**	1		6,830			
Itinerant Special Ed			330	**Itinerant Special Ed**			330			
(From Above Special Ed)				(From Above Special Ed)						

2005 Fads TYPE/COMPONENT	Original Number	Unit AreaSF	Fads Area	NEW OR REVISED TYPE/COMPONENT	Number	Unit Area Sq. Ft.	Revised FADS	Clsrm. Count	Tradeoff Recap	Remarks
Total Support Area			48912	**Total Support Area**			48,912			
Subtotal - School Area			120802	**Subtotal - School Area**			120,803			
Additional Storage	2%	120802	2416	Additional Storage	2%	120,803	2,416			
TOTAL SCHOOL-PROGRAM AREA			123218	**TOTAL SCHOOL PROGRAM AREA**			123,219			
OUTDOOR PHYSICAL EDUCATION				**OUTDOOR PHYSICAL EDUCATION**						
Playfield "A"	1	90,000	90000	Playfield "A"	1	90,000	90,000			
Playfield "B"	1	75,000	75000	Playfield "B"	1	75,000	75,000			
Playcourt	1	10,368	10368	Playcourt	1	10,368	10,368			
Covered Playcourt	1	10,368	10368	Covered Playcourt	1	10,368	10,368			
Stage & Storage	1	1,230	1230	Stage & Storage	1	1,230	1,230			
AREA OF OUTDOOR PHYSICAL EDUCATION			186966	**AREA OF OUTDOOR PHYSICAL EDUCATION**			186,966			
				CORE AND SUPPORT AREAS						
				Toilet Rooms			2,059			
				Interior Commons @ Neighborhoods			28,440			
				Mechanical Rooms			1,639			
				Signal/Electrical Rooms			1,098			
				Staff Restroom at Elective Area			192			
				Corridors and Circulation			37,048			
				Subtotal - Core and Support Areas			70,505			
				Total Area for School			193,724			
				NTG Factor			1.57			

BASIS FOR DESIGN

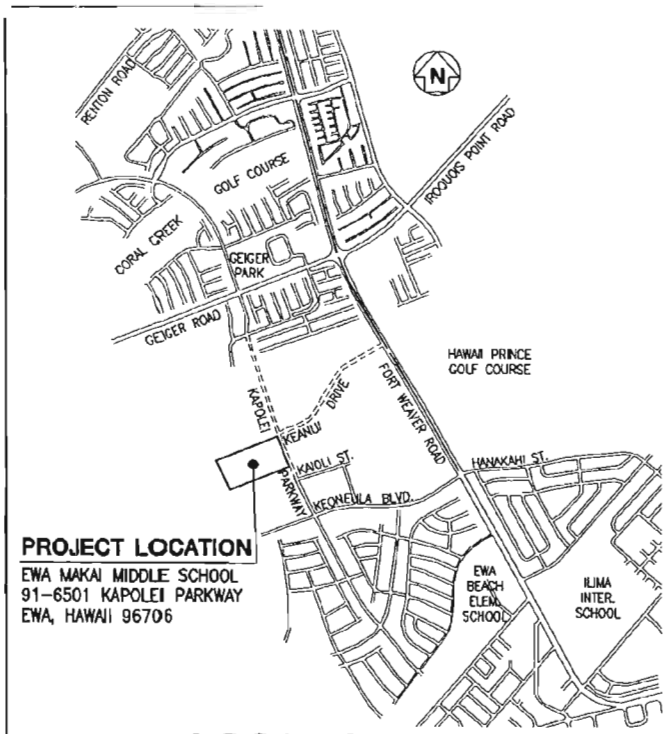

LOCATION MAP

NOT TO SCALE

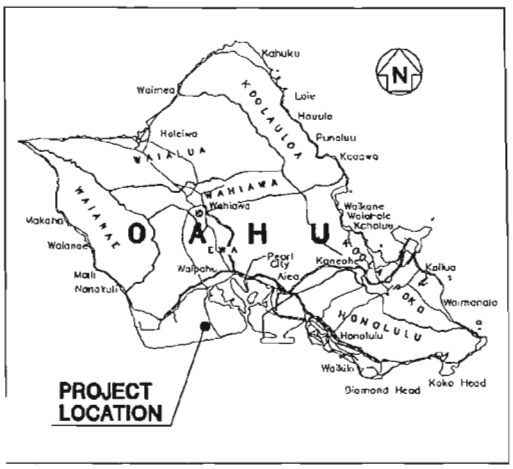

VICINITY MAP

NOT TO SCALE

PREPARED BY:
MITSUNAGA & ASSOCIATES, INC.
747 AMANA STREET, SUITE 216
HONOLULU, HAWAII 96814
PHONE: 945-7882 FAX: 944-2563
EMAIL: MITSUNAGA-CIVIL@HAWAII.RR.COM

EWA MAKAI MIDDLE SCHOOL
FIGURE 1 - LOCATION AND VICINITY MAP
EWA OAHU HAWAII

Date: July 2005
DOE Job No.

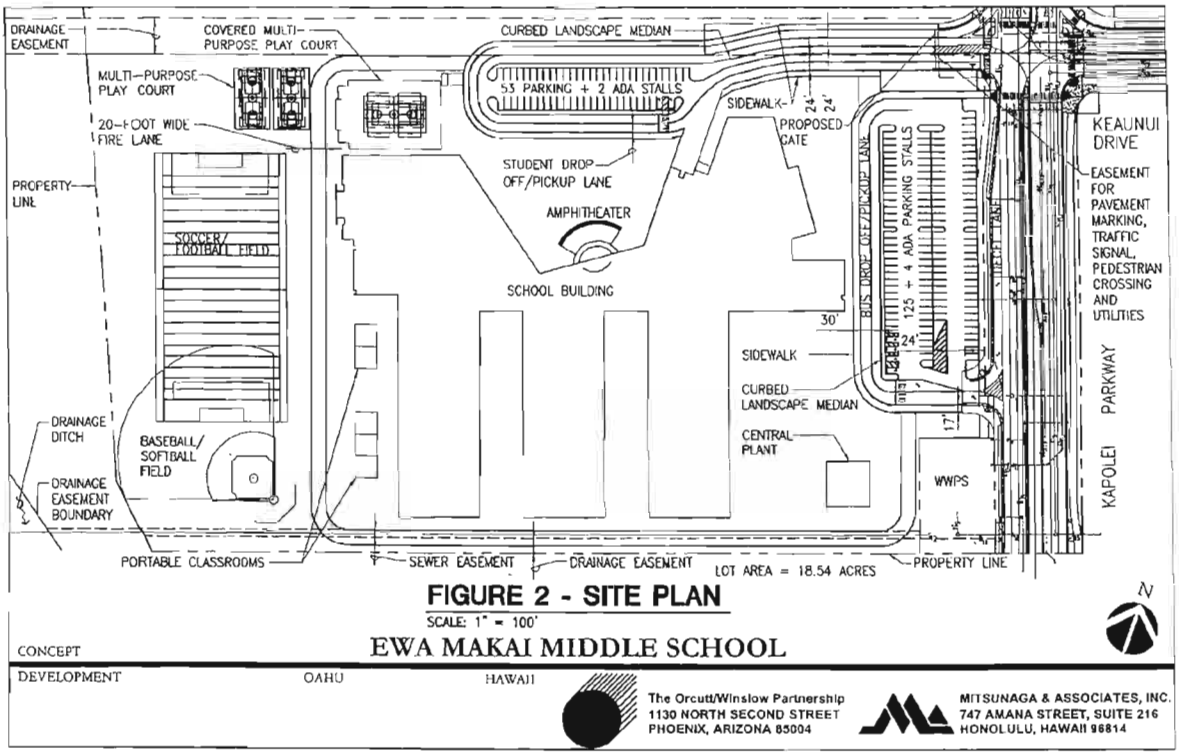

FIGURE 2 - SITE PLAN

SCALE: 1" = 100'

EWA MAKAI MIDDLE SCHOOL

LANDSCAPE ARCHITECTURE BASIS FOR DESIGN

Ewa Makai Middle School – The School of Tomorrow

LANDSCAPE CONCEPT

The landscape concept for the Ewa Makai Middle School will support the design of the classroom building and addresses function, the Hawaiian culture, the climate of the Ewa plains, and landscape maintenance.

- Function – In a middle school setting, function is key to the design of the landscape. The outdoor areas are essential to support learning, whether the classes, or sports fields and courts. The design also takes into account all users including students, faculty, and community members.

  In order to accommodate various functions, the design provides specific venues from an amphitheater which seats up to 1,000 people to intimate gathering areas for small groups in the interior classroom courtyards. The sports fields provide for multi-use activities.

- Culture – The Ewa Makai Middle School landscape design will promote the uniqueness of the Hawaiian culture. Native plants as well as culturally significant plants will be integrated into the classroom courtyards and can become a part of the curriculum and learning experience.

  Each of the classroom courtyards will have a theme which supports the middle school curriculum. The amphitheater area will also be designed with a theme as its basis.

- Climate – The Ewa climate demands a need for shade. Large canopy trees provide shade in the parking lots on two sides of the school. Shade trees help to keep the building cool especially on the west and south faces.

- Maintenance – Any successful landscape requires consistent maintenance. However, the judicious selection and placement of plants will help to keep maintenance to a minimum. Plants will be selected for qualities relating to function, culture, and climate. An automatic irrigation system will provide efficient watering with minimum overspray and pudding. Mulches shall be used at the base of the trees to control weeds, reduce moisture loss, and protect the plants from mowers and string trimmers.

PLAN FEATURES

- Entry – The school will have a sign at the corner or Kapolei Parkway and the entry drive. The sign will have accent landscaping to support it such as palms and low ground covers.

- Entry Plaza – The entrance to the school will be a welcoming landscaped plaza with special paving, accent palms and trees, built-in seating, and an identification sign for the school. It will be a place where students can meet friends before and after school.

- Amphitheater – The amphitheater will be the main gathering space for the school. It will have raised seating that may accommodate up to 1,000 people. The space will be shaded by a fabric-like structure that could be in the form of a sail. The floor of the amphitheater will be paved with special paving in a blue wave pattern suggesting a voyage on the sea.

- Classroom Courtyards – Each classroom courtyard will have a theme which supports the middle school curriculum. Examples are: Space, Native Hawaiian Species, and an *ahupua'a*. Students may be encourages to help maintain these spaces. If a *lo'i* is integrated into the design, students could be involved in the planting and harvesting of taro.

  The courtyards are long and linear. The landscape design will break up the spaces and create smaller intimate gathering spaces. Natural shapes and curvilinear forms will lessen the linear feel of the space.

ARCHITECTURAL BASIS FOR DESIGN

Ewa Makai Middle School – The School of Tomorrow

LAND ZONING

Tax Map Key:
9-1-069: 005 (Lot 90003)

Address:
91-6501 Kapolei Parkway
Ewa, Oahu, Hawaii 96706

Land Area
18.542 Acres

Code References

Zoning Code
Land Use Ordinance, Department of Planning & Permitting, City and County of Honolulu Amendments

Building Code: Per meeting with Department of Planning and Permitting on June, 17, 2005, the Ewa Makai Middle School will be reviewed under the 2003 International Building Code Requirements. See agency letter to file.

Land Zoning Requirements

- Flood Zone is Firm Zone D
- Height Limit is 25 ft. Waiver will be required for heights above the 25 ft. for residential. Heights above this limit will require a waiver.
- Not in historic site register
- Lot restrictions – none
- Not in SMA/Shoreline restrictions
- Not is any Special Districts
- State Land Use designation is Urban
- Zoning is R-5
- The parcel is presently in an un-subdivided vacant land area and will need to be subdivided
- Gentry has design guidelines for the area in place

BUILDING CODE

- The occupancy group is E (educational) per Section 305
- Construction type is Type II-B, Unlimited per Table 503.
- Per Section 507.8, the area of a one story building may be unlimited if the following conditions are met:
  1. Each classroom shall have not less than two means of egress, with one means of egress being a direct exit to the outside of the building complying with Section 1017.
  2. The building is equipped throughout with an automatic sprinkler system in accordance with Section 903.3 1.1.
  3. The building is surrounded and adjoined by public ways or yards not less than 60 ft. in width.

Ewa Makai Middle School meets all of the above conditions.

- Total actual area of school is 193,794 s.f. This is allowed under the unlimited area condition for E occupancies
- Maximum height allowed is 2 stories - 25 ft.
- Actual height is 42 ft. and one story. Waiver will be required for the increase in height above 25 ft.
- Fire resistance rating requirements for Type II-B is no rating required per Table 601.
- Exiting:
  - Each classroom to have 2 exits per Type II-B requirement
  - Occupant load calculation (per Table 1004.1.2)
    - Classroom – 20 s.f. per person. 27 general classrooms @ 980 s.f. – 26,460 s.f./20 =***1323 occupants***
    - Special Education Classrooms – 4 FSC @ 1360 s.f. = 5440 s.f/20 – ***272 occupants***
    - PE Classrooms 2 @ 980 s.f. = 1960 s.f./20 = ***98 occupants***
    - Resource Classrooms – 9 @ 600 s.f. = 5400 s.f./20 = ***270 occupants***
    - Supplemental Classrooms Dance/CSAP/Virtual Reality = 4140 s.f./20 = **207 occupants**
    - Shops/Labs/Vocational – 50 s.f. per person – 24,636 s.f./50 = ***493 occupants*** (includes all science, shops, labs, and computer resource areas)
    - Music/Choral – 5,655 s.f./20 = ***283 occupants***
    - Library – reading rooms – 50 s.f. per person, stack areas – 100 gross s.f. – 4755 s.f./50 = ***95 occupants for reading area.***
    - Kitchen – 200 s.f. gross. 3926 s.f./200 = ***20 occupants***
    - Dining/Assembly – 15 s.f. 7200 s.f./15 = ***480 occupants***
    - Locker Room – 50 s.f.. 6,830 s.f./50 = **137 occupants**
    - Offices and Conference Rooms – 100 s.f.. 17662 s.f. = ***177 occupants*** (includes all offices and conference rooms)
    - Accessory storage/mechanical rooms/equipment rooms – 300 s f. 5153 s.f./100 = **52 occupants**
    - **Total occupant load for entire school: 3907**
- Minimum egress width is per Section 1005. With sprinkler system, the factor is 0.15 for occupants served.
- Corridor widths for each wing of building:
  - Typical Classroom Pod Wing – Total occupant load per wing is 660 occupants x 0.15 = 99" Actual corridor width provided is 24 ft. – 40 ft.
  - Electives Wing – Total occupant load is 676 occupants x 0.15 = 101.4" Actual corridor width provided is 120" (10 ft.)
  - Administration Wing – Total occupant load is 42 occupants x .15 – 6.3". Actual corridor width provided is 72" (6 ft.)
  - Counseling Wing – Total occupant load is 103 occupants x .15 = 15.45" Actual corridor width provided is 72" (6 ft.)
  - Minimum No. of exits – 4 as required by Table 1018.1 for occupancies over 1,000
  - Egress width components per Table 1005.1. Total occupant load 3907 x .15 = 586" minimum (49 ft.). Total provided – 2 exits from each classroom. Additionally, main exit doors along corridors = 1584"(132 ft.) of exit door.

HAWAII MODEL ENERGY CODE REQUIREMENTS

- Roof – minimum insulation R value = R-19
- Walls – minimum to be determined during the design
- Windows – minimum glass shading coefficient to be determined during the design

DEPARTMENT OF HEALTH – SANITARY FACILTIES

Allowable minimum sanitary facilities for students per the Department of Health Chapter 11, for entire school is based on maximum design enrollment of 1050 students. The following was ascertained from Table II – Schools.

525 Males	525 Females
17 wc	10 wc
9 urinals	8 lavs
8 lavs	

Fixtures provided per the plan

Males	Females
17 wc	27 wc
11 urinals	18 lavs
17 lavs	

Per the Uniform Plumbing Code, 14 drinking fountains required (1 per 75 students)

For Administration/Counseling/Staff.

73 Males	73 Females
4 wc	4 wc
4 lavs	4 lavs

Provided:
-One restroom for each sex in each Teacher/Faculty Center (4)
- Staff restrooms in Media Center, Counseling & CSAP, PE Locker/Showers, Custodial Center, Administration Wing, and Health Center

STATE REQUIREMENTS

- State Occupational Safety and Health Law (OSHA)
- HRS, Act 308/309, Section 103-50 relating to persons with disabilities (use current ADA Accessibility Guidelines, 36 C.F.R.PT.1191)

STRUCTURAL BASIS FOR DESIGN

Ewa Makai Middle School – The School of Tomorrow

STRUCTURAL FRAMING SYSTEM

Foundation
The foundation system will consist of continuous and spread footings bearing on in-situ soils or engineered fill.

Slab-On-Grade
The concrete slab-on-grade will be 4" minimum thick, reinforced with #4 @ 16" o.c. on a moisture barrier. This building is entirely one story.

Walls
Exterior walls, bearing walls, and shear walls will be of 8" grouted masonry units or 8" thick concrete walls.

Columns
Poured in place concrete or CMU columns will be used to support beams and girders.

Roof

- 1-1/2" deep x 22 gauge metal decking will be used over purlins to support the insulation and steel roofing. The decking will also be used as a horizontal diaphragm.
- 8" or 10" deep x 14 gauge purlins spaced at approximately 4'-0" o.c. will be used to support the metal decking and span between the steel beams, trusses or frames.
- Structural steel beams, trusses or frames will be used to support the roof framing and be spaced at approximately 20'-0" o.c.

Agency References

Uniform Building Code (UBC 1997)

Building Code Requirements for Reinforced Concrete (ACI 318-89)

AISC Manual of Steel Design, 1986

Cold Formed Steel Design, 1986

Reinforced Masonry Engineering Handbook, Fifth Edition

MECHANICAL
BASIS FOR DESIGN

Ewa Makai Middle School – The School of Tomorrow

DESIGN REFERENCES

Americans with Disabilities Act Accessibility Guidelines (ADAAG)

ASHRAE 62-1989, Ventilation for Acceptable Indoor Air Quality

ASHRAE Fundamentals - 2003 Edition

Educational Specifications Middle School, Department of Education, State of Hawaii

Building Energy Efficiency Standards, Chapter 32 ROH, 1995.

NFPA 13 - Installation of Sprinkler Systems - 2002 Edition.

NFPA 90A - Installation of Air Conditioning and Ventilating Systems - 2002 Edition.

NFPA 96 - Ventilation Control and Fire Protection of Commercial Cooking Operations - 2004 Ed.

Uniform Fire Code 1997 Edition with City and County of Honolulu Amendments

Uniform Plumbing Code - 1997 Edition with City and County of Honolulu Amendments

Design Standards for Air Conditioning Schools, Revised 10/31/96, State of Hawaii, Department of Education

State of Hawaii, Department of Health, Hawaii Administrative Rules – Title 11, Chapter 39, Air Conditioning and Ventilation

GENERAL MECHANICAL SCOPE OF WORK

- Provide fire protection, plumbing, air conditioning and ventilation systems for a new middle school in Ewa Beach, Oahu, Hawaii area.
- Fire protection work will include providing a wet pipe fire sprinkler system for the building where required by the Building Code.
- Plumbing work will include providing plumbing fixtures and water, vent and sewer systems for classrooms, restrooms and support facilities.
- Air conditioning work will include providing conditioned air to the classrooms, offices and support facilities to provide a high indoor air quality environment.
- Ventilation work will include providing mechanical ventilation for the restrooms, kitchen grease hoods and science room fume removal.

DETAILED DESCRIPTION

Fire Protection System

- Building will be protected by a wet pipe fire sprinkler system throughout. Fire sprinkler risers will be placed indoors to minimize vandalism. Sprinkler heads will be concealed pendant type to minimize vandalism as requested by DAGS Central Services. The sprinkler system will be provided in accordance with NFPA 13.
- No fire pump is planned. Adequacy of water supply source will be determined during design development. Current floor area will require a minimum of 3 each, 6" diameter sprinkler connections to the site water supply.

Plumbing System

Plumbing Fixtures

- Floor mounted flush valve water closets and urinals, wall hung lavatories, floor drains and hose bibbs will be provided at the restrooms. Fixtures will be selected to meet the ultra-low flow requirements of reference (K). No hot water will be provided to these restrooms. Selected fixtures will be handicapped accessible, mounted at adult height, in accordance with ADAAG.
- Each classroom will be provided with a countertop stainless steel sink per Reference (D). No hot water will be

provided, with selected sinks to be handicapped accessible, mounted at adult height, in accordance with ADAAG. In addition, a solids interceptor (clay trap) will be provided for the sink, where required by the design references.

- The science classrooms will be provided with acid resistant sinks. No hot water will be provided to the classrooms. Selected sinks to be handicapped accessible, mounted at adult height, in accordance with ADAAG. In addition, an acid neutralization tank will be provided at the exterior of the building to capture any acids from the science classrooms only, before the waste discharges into the sanitary sewer system.
- Kitchen sinks, food preparation equipment and dishwashing equipment will be provided with hot water and cold water. Sinks and hot water dispensers for offices, workrooms and other specialized rooms will be provided where authorized by the design references.
- The kitchen fixtures will drain to a grease interceptor at the exterior of the building to capture any grease before the waste discharges into the sanitary sewer system. Grease interceptors shall be sized and selected in accordance with the county wastewater requirements.
- Gym/Athletic Facilities/P.E. locker rooms will be provided with built-in shower stalls. Hot water will be provided to all showers. Selected showers to be handicapped accessible, mounted at adult height, in accordance with ADAAG, Reference A. Shower valves will be pressure compensated type with temperature control at each valve.
- The building exterior will be provided with concealed wall hydrants, located approximately 100 feet on center for washdown of adjacent walkways and supplemental irrigation of planting areas. The wall hydrants were selected in lieu of wall mounted hose bibbs to reduce vandalism and aesthetics.

Domestic Water Piping

- New water piping will be Type K, hard drawn copper for below ground areas and Type L, hard drawn copper for above ground areas. Fittings will be cast bronze or wrot copper with soldered ends with tin-antimony solder (no lead solder allowed). If soil is highly corrosive and has caused premature failure of underground copper pipes, non-metallic pipes will be considered. Hot water piping below grade will be pre-insulated or field-insulated copper tubing, while above grade hot water piping will be of copper construction and insulated fiberglass with all service self sealing jacket.

Drainage, Waste and Vent Piping

- New drainage, waste and vent (DWV) piping will be service weight no-hub cast iron soil pipe and fittings with cast iron mechanical couplings for underground applications and no-hub cast iron soil pipe and fittings with stainless steel bands for above grade applications.
- Science classrooms will be provided with acid resistant DWV piping and fittings
- Exposed DWV piping for kitchen fixtures will be DWV copper pipe with wrought copper, soldered ends fittings.

Handicapped Accessibility

- Handicapped accessibility provisions will be designed using the Americans with Disabilities Act Accessibility Guidelines (ADAAG) design criteria. All fixture heights will be designed to adult height dimensions. Specific criteria will be verified with the Disability and Communication Access Board (DCAB), State of Hawaii during design phase.

Hot Water System

- A life cycle cost analysis during the design phase will be provided to determine if waste heat recovery from the air conditioning system is a cost effective method to preheat the domestic water. Per the Building Energy

Efficiency Standards, Reference F, waste heat recovery is required "unless the system can be shown to be not cost effective over its anticipated service life" (para 32-9.3.(h)). At this time, water-to-water heat pump in the chilled water return piping of the air conditioning water chiller system is planned to be included. The heat pumps generate hot water by precooling the air conditioning chilled water. Supplemental water heating if there is inadequate hot water available from the heat pumps will be accomplished with gas fired boilers. Hot water storage tank(s) and a hot water recirculation system will be provided to recirculate water from the central plant to the main building.

- In addition, air-to-water heat pumps will be evaluated during design to precool makeup air for the kitchen hoods and concurrently heat hot water for domestic use.

- The hot water system temperature will be 140 degrees F for the kitchen and 120 degrees F for all other fixtures supplied hot water. A tempering valve station will be provided to temper the hot water to 120 degrees F.

- A booster water heater will be provided if required by the dishwashing equipment to raise the water temperature to the meet the requirements of Hawaii Department of Health Sanitation and the equipment manufacturer.

Domestic Water Demand

- The schematic drawings indicate a fixture unit count of 658 fixture units, 165 gpm required for the facility. A 4" service lateral will be coordinated with the civil consultant to provide adequate water supply for the plumbing system.

Synthetic Natural Gas

- Gas will be provided for hot water heaters, kitchen appliances and equipment requiring gas.

Air Conditioning System

- A chilled water system with a combination of variable air volume (VAV) air handling units (AHU) and ducted, constant volume fan coil units (FCU) will be used for the various buildings. The AHU's will be used for the classrooms and other rooms while the FCU's will be used for small rooms or unoccupied rooms that with high internal loads require heat removal (e.g. telecommunications rooms).

- The campus will be served by a central chilled water plant distributing chilled water to the main building. The main building will be separated into seven zones as follows:

  1) Music/Art/PE
  2) Administration
  3) Media Center
  4) Classroom 1
  5) Classroom 2
  6) Classroom 3
  7) Dining

- The general concept is to provide zones with a constant volume displacement ventilation system to cool and ventilate the rooms. Special displacement diffusers mounted to the room walls at floor level will provide uniform horizontal supply air flow. The air will be heated by the room loads and rise to the ceiling where it will be returned to a central station, chilled water AHU. The return air will be used to reheat the supply air and precool the incoming outside air. Some of the return air will be exhausted and the remainder mixed with the precooled outside air. The mixed air is cooled and dehumidified as it passes through the cooling coil.

- CO2 levels will be measured in each classroom and the amount of outside air will be increased if CO2 levels are higher than recommended by Reference (B) for ventilation demand control. The amount of outside air and return air will be regulated by motorized dampers and by modulating the fan speed of the AHU

- Room temperature control will be provided by reheating the supply air at the reheat coil. Reheat water will be produced by the water-water heat pump

that precools the chilled water as it returns to the chillers.

- Where room layouts (e.g. many adjacent small offices or rooms) may not be cost effective to use displacement ventilation concept, a traditional overhead VAV system, FCU or other system will be considered.

- Two (2) centrifugal chillers, located indoors at the central mechanical plant building, will be provided with two (2) open circuit, counter flow cooling towers. The estimated peak capacity of the chilled water plant is 500 tons. Chiller plant equipment will be selected to meet the efficiency requirements of Reference F.

- The cooling towers will be located outdoors on a concrete slab on grade and enclosed to attenuate noise from the towers and prevent unauthorized tampering with the equipment. The cooling towers will be connected to the chillers with above ground condenser water piping. The cooling towers will be provided with variable speed or two (2) speed fan motors to increase energy efficiency and reduce noise.

- The chilled water is distributed from the central mechanical plant building to the buildings on campus by a primary/secondary pumping system, consisting of constant volume primary pumps and variable volume secondary pumps. The primary pumps provide a constant flow of chilled water through the chillers and the secondary pumps provide a variable chilled water flow to the air handling units, as required to meet the varying cooling load. The variable flow secondary pumping scheme provides greater energy efficiency, reducing energy costs, when compared to other pumping schemes.

- The AHU's will be floor mounted in mechanical rooms for ease of service and maintenance. The AHU's will be insulated, double wall construction with a solid inner wall for improved indoor air quality as well as noise attenuation. Each AHU will be equipped with solid state variable frequency drives (VFD) to vary the fan speed, thereby varying the supply air, return air and outside air quantities and saving on fan energy that is not required during part load operation.

- A reheat water coil will be provided for each conditioned room requiring temperature control by modulating reheat water flow to meet the room setpoint. The reheat coils and distribution ductwork will be located above the ceiling. All ductwork will be galvanized sheet metal, constructed in accordance with specified pressure class from the Sheet Metal & Air Conditioning Contractor's National Association, Inc. (SMACNA) Duct Construction Standards and insulated with a minimum of 2" thick exterior foil faced, fiberglass ductwrap insulation for improved indoor air quality (e.g. easier to clean ducts and less places within the duct to trap dirt, dust and other contaminants).

- The air conditioning system will be controlled by a campus wide energy monitoring and control system (EMCS) that will schedule system on/off times and monitor system operation and select control strategy. In addition, each building will have a building automation system (BAS) monitor and control the individual equipment unit control panels in that building (e.g. AHU's, FCU's, chillers). A personal computer (PC) complete with CPU, monitor, keyboard, printer and modem will be provided for communication and monitoring of the campus wide EMCS. The PC should be located in the Administration area or other occupied area if the school will operate the air conditioning system.

- Outside air requirements are based on the requirements of ASHRAE 62-1989 and will be 15 cfm/person for classroom areas, 20 cfm/person in office areas, 0.1 cfm/sf in corridors, 0.5 cfm/sf in lockers and 0.05 cfm/sf in storage areas.

Ventilation System

Restrooms and Locker rooms

- Rest rooms and locker rooms will be ventilated by transferring air from adjacent air conditioned areas to the rest rooms and lockers. If conditioned air is not available, fresh air will be transferred to the restroom and lockers rooms from the exterior. The rest rooms

will be exhaust at a minimum of 2 cfm/sf (if using conditioned air) or 4 cfm/sf (if using fresh air), in accordance the Department of Health (DOH) guidelines, Reference M. The exhaust fans may be interlocked with the air conditioning system and operate whenever the air conditioning system is operating during normal business hours to exhaust the outside air.

- Air curtains will be provided at the service entrance to the kitchen and at all exterior doors to the student and faculty dining areas. Control of fans will be manual push buttons that will controlled by the kitchen staff only.

- Ceiling fans in the dining areas may be provided if warranted for air circulation. Fans shall be coordinated with the ceiling assembly and aesthetics. Controls for fans will be manual switches.

Kitchen Exhaust System

- A ducted kitchen exhaust system will be provided to remove heat, grease laden exhaust and odors from the kitchen exhaust hood(s) to meet the requirements of DOH in Reference M. The exhaust fans will be oversized to lower fan speeds and provided with soft starters to minimize noise radiated to the surroundings during startup. Capacities will be based on the size of the hoods. Exposed ductwork will be welded stainless steel. Concealed ductwork will be welded, ungalvanized carbon steel. Exhaust fan shall be rated for use in a grease hood system.

- If the kitchen is provided an automatic dishwasher, a mechanical exhaust system shall be provided to exhaust the steam vapor from the dishwasher. Ductwork will be welded stainless steel.

ELECTRICAL ENGINEERING BASIS FOR DESIGN

Ewa Makai Middle School – The School of Tomorrow

DESIGN REFERENCES

DOE Design Guide for Fire Alarm Criteria.

Uniform Fire Code, 1997, with local amendments.

DOE Educational Specifications and Facilities Guide for Middle Schools.

Uniform Building Code, 1997, with local amendments.

National Electrical Code (NEC) NFPA 70-2002.

Life Safety Code, NFPA 101-2003.

Illuminating Engineering Society of North America (IESNA) Lighting Handbook, Ninth Edition, 2000.

Hawaii Model Energy Code, July 1993.

PRIMARY EXTERIOR ELECTRICAL SYSTEM

- Primary power will be derived from the existing Hawaiian Electric Company (HECo) primary underground system along Kapolei Parkway. Primary ductline to serve the new campus will be provided by the roadway and subdivision infrastructure development project.

- A primary underground ductline and handhole system will intercept and extend the ductline stub-outs to the proposed HECo primary switch and service transformer dedicated to the campus.

- Project will provide concrete equipment pads for the pad-mounted transformer and primary switch. Procurement and installation of primary cabling and the equipment is the responsibility of HECo.

- The school will be billed on Rate Schedule P "Large Power Service."

- All work related to the primary electrical system will be coordinated with HECo.

SECONDARY EXTERIOR ELECTRICAL SYSTEM

- Secondary power for the new campus will originate from one new HECo pad-mounted transformer. The transformer will supply power to the campus at 480/277 volts, 3 phase, 4 wire, 60 Hertz.

- Secondary service electrical feeders will be routed from the pad-mounted transformer to the main campus electrical room within the Central Plant building.

- The secondary switchboard will be provided with a kilowatt-hour HECo revenue meter.

- Secondary distribution system will consist of individual 600 volt conductors, with RHW/USE insulations, within electrical handholes and concrete encased PVC ductlines.

EXTERIOR TELEPHONE SYSTEM

- Telephone service will be derived from the Hawaiian Telcom (HT) underground distribution system along Kapolei Parkway. Telephone ductline stub-outs to serve the campus will be provided by the roadway and subdivision infrastructure development project.

- The telephone service ductline stub-outs will be intercepted and extended to the Main Signal Room (Media Control/Signal Processing Room.)

- Exterior telephone system will consist of underground handholes and empty concrete encased with muletape.

- Telephone service entrance cables to be provided by HT

EXTERIOR CABLE TELEVISION SYSTEM

- Cable television (CATV) service will be derived from the Oceanic Time Warner Cable (OTWC) underground

distribution system along Kapolei Parkway. CATV ductline stub-outs to serve the campus will be provided by the roadway and subdivision infrastructure development project.

- The CATV service ductline stub-outs will be intercepted and extended to the Main Signal Room similar to the telephone system.

- CATV service entrance cables to be provided by OTWC.

EXTERIOR LIGHTING

- Energy efficient high pressure sodium (HPS) luminaries to be provided at exterior doorways of the new buildings for safety and general illumination around the entrances/exits.

- HPS pole mounted lights will be provided for illumination of all driveways, vehicle parking areas, and selected pedestrian walkways. Target lighting level will be an average of 0.5 footcandles maintained illumination.

- Site and building mounted exterior lights will be operated by lighting contactors with time switch controls.

- General area lighting will be provided for the outdoor stage area of the Amphitheater and Covered Playcourt. Lighting will be accomplished via building mounted lights. **No** specialty performance lighting will be provided.

SPORTS LIGHTING

- Ballfields and playcourts (outdoor and covered) will **not** be illuminated for activities after dark

INTERIOR WIRING SYSTEM

- Electrical wiring systems will consist of insulated copper conductors in raceways.

- Raceways will consist of galvanized rigid steel conduit for all exposed work. EMT conduit will be permitted above grade slab where cast into concrete and within concealed wall and ceiling spaces. PVC conduit will be utilized underground and under grade floor slabs.

- Electrical equipment enclosures will be NEMA Type 1 for interior locations and NEMA Type 4X for exterior locations.

- Secondary power will be distributed at 480/277 volts, 3 phase, 4 wire, 60 Hertz. Step-down dry-type transformers will be utilized to provide 208/120 volts, 3 phases, 4 wire, 60 Hertz power where necessary.

- Power feeders to each major building "wing" of the facility to be routed exterior to the main building via an underground ductline system. This distribution concept is based upon Building Department concurrence that the facility is a "large" structure with fire separation of the wings, thus permitting dedicated feeders directly to each wing's electrical room from the main switchboard in the Central Plant Building.

SWITCHBOARDS AND PANELBOARDS

- The switchboards and panelboards will have copper bussing.

- Switchboard main circuit breaker will be of the insulated case type. Switchboard feeder circuit breaker and all circuit breakers within panelboards will be equipped with bolt-on, molded-case circuit breakers.

- Switchboard and panelboards will be equipped with separate ground busses. Isolated ground busses will be provided where required.

- Switchboard will be equipped with a Kirk-key interlocked circuit breaker to facilitate connection of a portable generator during an extended HECo power outage. Qualified electrical personnel will need to manually shed loads as required to match portable generator capacity whenever this emergency power feature is utilized.

RECEPTACLES

- Convenience receptacles will be provided throughout the facilities. Each habitable room will have a minimum of one receptacle.

- Ground Fault Circuit Interrupter (GFCI) receptacles will be provided at countertops with sinks, toilets, and exterior walls throughout the facilities. GFCI receptacles will also be provided at the outdoor stage for portable spotlights and performance equipment. All exterior receptacles will be provided with lockable weatherproof covers.

- All exterior receptacles within student restrooms will be controlled by a switch located in a nearby janitor's closet.

- Receptacle locations will conform to the DOE Educational Specifications and Facilities Guide and as modified per DOE direction.

INTERIOR LIGHTING

Target footcandle levels will be as recommended by the IESNA Lighting Handbook. The following target footcandle lighting levels will be used.

Design Illumination Levels

Room Usage	Maintained Footcandles	Lamp Type
Conference Rooms	50	Fluorescent
Maintenance/ Custodial	20	Fluorescent
Lounges	30	Fluorescent
Offices	50	Fluorescent
Classrooms	70	Fluorescent
Library Stacks/ Meeting	30/70	Fluorescent
Treatment/ Recovery Room	70	Fluorescent
Lobby/ Waiting	30	Fluorescent
Toilet Facilities	20	Fluorescent
Mechanical Room	20	Fluorescent
Electrical Room	25	Fluorescent
Main Signal Room	50	Fluorescent
Corridors	20	Fluorescent
Storage Areas	20	Fluorescent

- General interior illumination will be provided by energy efficient fluorescent luminaries utilizing T-8 lamps and electronic ballasts except as otherwise noted. Luminaries will be equipped with standard A-12 acrylic prismatic lenses and be recessed into the ceiling whenever possible.

- Multi-level and/or zone switching will be provided in large rooms for energy conservations and selectivity for task illumination. Occupancy sensors will be provided in classrooms, offices, and conference rooms to meet energy efficient standards required by the Hawaii Model Energy Code.

- Luminaries within stack and reading areas of the library will be provided with electronic ballasts with a sound rating of A+.

- Illuminated exit signs will be provided for all emergency exits and exit passageways as required by NFPA 101, Life Safety Code.

- Emergency lighting will be provided in conformance with NFPA 101, Life Safety Code. Emergency lighting will utilize integral battery backup modules within selected fluorescent luminaries.

INTERIOR TELEPHONE DISTRIBUTION SYSTEM

- Interior telephone distribution raceway systems will be provided throughout the building. Telephone switching equipment, instruments, interior cabling, and terminations by the interconnect company vendor retained by the School/DOE.

- Telephone distribution raceway systems will consist of empty raceways with pullstrings, outlet boxes with blank device cover plates, pullboxes, and connections to the respective building grounding system.

- Telephone raceways will consist of ¾" minimum diameter conduits.

- Telephone backboards will be provided with isolated ground type convenience receptacles nearby.

- Telephone outlet locations will conform to the DOE Educational Specifications and Facilities Guide.

ADMINISTRATIVE DATA (AD) AND INFORMATION DATA (ID) RACEWAY SYSTEMS

- Empty AD and ID raceway systems will be provided for the project. AD and ID equipment, cables, jacks, and terminations by others.
- Interior AD and ID raceway systems will consist of empty raceways with pullstring, outlet boxes with blank device cover plates, pullboxes, backboards, and connections to the respective building ground system.
- AD and ID raceways will consist of 1" minimum diameter conduits.
- AD and ID backboards will be provided with isolated ground type convenience receptacles nearby.
- AD and ID outlet locations will conform to the DOE Educational Specifications and Facilities Guide.

CABLE TELEVISION (CATV) RACEWAY SYSTEM

- Empty CATV raceway system will be provided for the project. CATV equipment, cables, jacks, and terminations are anticipated to be provided by the OTWC as a public service contribution to the community.
- Interior CATV raceway system will consist of empty raceways with pullstring, outlet boxes wth blank device cover plates, pullboxes, backboards, and ground.
- CATV raceways will consist of 3/4" minimum diameter conduit with pullstring.
- All CATV backboards will be provided with isolated ground convenience receptacles nearby.
- All CATV system layouts will conform to the Educational Specifications and Facilities Guide.

FIRM ALARM SYSTEM

- A campus-wide, integrated fire alarm system will be provided. The Main Fire Alarm Control Panel (MFACP) will be located in the Administration wing of the facility. Fire alarm equipment will consist of pull stations, horns, visual signaling devices, raceways and wiring. Additional initiation devices such as smoke detectors, food service fire protection system connections, etc. will be provided as necessary.
- All devices within a given building will be hard-wired to the MFACP.
- All fire alarm systems will conform to the DAGS Guide for Fire Alarm Systems.

INTERCOM/PROGRAM BELL SYSTEM

- An integrated intercom/program bell system including a main control console/rack, remote control master consoles, speakers, and call origination stations will be provided for the campus. The head-end equipment will be located in the Main Signal Room
- Intercom/Program Bell raceways will consist of ¾" minimum diameter conduit, cabling as required.
- No program clocks will be provided per DAGS and DOE direction.

GROUNDING SYSTEMS

- All exterior luminaire poles will be grounded and bonded.
- A separate ground bus will be provided within each switchboard and panelboard. Isolated ground busses will be provided where required.
- Bare copper ground wires, bonded to the building grounding system, will be provided in each signal room. Ground conductors to consist of 6' coils of bare #6 copper ground wires. Final terminations by the individual signal interconnect company vendors (s) retained by the School/ DOE.
- There has not been any equipment with specialized grounding requirements identified for this project.

CHARETTE SESSION NOTES

EWA MAKAI MIDDLE SCHOOL PLANNING CHARETTE

Charette 1/Day One
March 14, 2005 (Monday)

Tony Chun welcomed the Steering Committee for Ewa Makai Middle School.
1 helpful hint
2. need to agree or to disagree for the good of the kids

Paul Winslow: What is the right school for Ewa. "YOUR SCHOOL" - A Design Guide
1. Learning Environments
2. What is the soul of this school
3. Goal – productive citizen, life long learners
4. Relationships, social structure, elements into building design
5. Brain – neurons increased in rich environments
   - brain environments affect our brain which controls behavior development
   - environmental factors affect the brain
   - take out negative stimuli
6. Teaching & learning characteristics
   - Challenge current beliefs
     - Learning relevant to students
     - Use real life activities
     - School staff & facilities as teaching tools
     - Provide space that match activities
   - Teaching style
     - Learning styles
     - Student maturation
     - School organization
   - Teaching style
     - discovery
     - interaction
     - presentation
7. Trends
8. Implementation Strategies – social environment
9. Social structure
10. How to accommodate
11. Performance
12. Student maturation – physical size
13. Scheduling – calendar can affect space
14. Success – scheduling, corporeal environment, physical environment, social environment, curriculum standards
15. Parent meeting space
16. Leaving styles 7 kinds of smart logic, word, picture, music, body people, self
17. Nomenclature – classroom, office, creative center, lab, exploration
18. What we know now social comfort allows emotional preparedness, full stomach helps
19. Student development
20. Student maturation
21. See & be seen, see & be seen little, see but not be seen, neither see or be seen
22. Building as a learning tool
23. sustainable non direct light

EWA MAKAI MIDDLE SCHOOL PLANNING CHARETTE

Exercise 1 – How Do We Learn?
The Steering Committee was asked to think of ways that individuals learn.

Group 1 (see Charette 1-Exhibit 1)	Group 2 (see Charette 1-Exhibit 1)	Group 3 (see Charette 1-Exhibit 1)	Group 4 (see Charette 1-Exhibit 2)
Dail Rehee Marvin Yonamine Anne Greseth-Kim Sharene Tam	Tony Debbie Nakamoto Gaylyn Nakatsuka John Okinaka	Debra Hatada Randy Iarra Rie Kodama	Nick Nichols Lydell Acosta
Visually	By example	Trial & error	5-sense/physical learning
Auditory	Sensory	Senses (smell, tough, hear, see)	By reading, By speaking
Kinesthetically	Hands-on	Prior knowledge	By tactile, auditory, visual
Emotionally	By mistake/experience	Hands on, Through others	By modeling, Motivators for leering,
Modeling	By other's mistakes	Practice, repetition	Reward Exploring/Experimenting
Physical Learning	Successes	Reading, writing, observing	Trial & error
Socially	Role-play	Exploration, dream making	Repetition, By coaching
Trial and error	Visualization	Interacting	Small group & big group
Discovery/Exploration	Reading	Questioning, inquiry	Assigning roles/responsibility
Peers	Lecture	Caching, modeling	Setting expectation
Parental Example	Visual	Teaching others	Encouragement
Musically	Listening	Positive reinforcement	Comfortable, Suitable
Olfactory	Auditory	From peers, Internet, technology,	Environment
Flexibility	Kinesthetic (tactile)	Collaboration	Standards – setting standards
Adaptable	Taste, Oleo factory	Project based learning – real life	By sharing/discussion
Creatively	Osmosis, Mimicking	learning application	Right tools
Memorization	Simulation	Open to learning, Problem solving,	Drills, Practice, Inspiration
Linear/algorithmic	Emotional (fear, love)	Exploration and imagination	Out of necessity/survival
Heuristic	With others(peers/parents/ mentor/children/elders/groups)	experience Simulation/stimulation	Exhibition Experimenting, asking question

Groups focused on how children lean. Question was how we learn.

EWA MAKAI MIDDLE SCHOOL PLANNING CHARETTE

Exercise 2 – Where Do We Learn?

The Steering Committee was asked to think of places where learning takes place

Group 1 (see Charette 1-Exhibit 3)	Group 2 (see Charette 1-Exhibit 3)	Group 3 (see Charette 1-Exhibit 4)	Group 4 (see Charette 1-Exhibit 4)
Dail Rehee Marvin Yonamine Anne Greseth-Kim Sharene Tam	Debbie Nakamoto Gaylyn Nakatsuka John Okinaka Tony Chun	Debra Hatada Randy Iarra Rie Kodama	Lydell Acosta Una Chan Nick Nichols
Home Meeting Playground Store Church Media (TV/News) Museums Beach Travel Parks Sitting in traffic Theater Library Friend house Stadium Grandma's house	Home School On a team Library By myself In traffic Under stress At work Recreational activities Shopping In the shower/on the toilet	At home Lunch with friends At the car wash At the mall Airport Parties Park, beach Sporting events Movies In the bathroom In the car, driving Field trips Anywhere, in a line, waiting Starbucks Bookstores, library Home depot Swap meet	Bathroom Anywhere/everywhere Traffic Restaurants TV/movie Shopping mails Library Theater Plays Sports Games Special events Work School Beach Outdoors

Exercise 3 – Teaching Style

The Steering Committee was asked to come up with various teaching styles.

Group 1 (see Charette 1-Exhibit 5)	Group 2 (see Charette 1-Exhibit 5)	Group 3 (see Charette 1-Exhibit 6)	Group 4 (see Charette 1-Exhibit 6)
Dail Rehee Marvin Yonamine Anne Greseth-Kim Sharene Tam	Debbie Nakamoto Gaylyn Nakatsuka John Okinaka Tony Chun	Debra Hatada Randy Iarra Rie Kodama	Lydell Acosta Una Chan Nick Nichols
Lecture Dictators (don't question) Facilitative Project – based learning Experiments / scientific Hands-on learning (art, music) Modeling/setting an example Discussion	Using peers Lecture Coaching Group projects Direct st particular method: role-playing, projects Use of examples Exemplars (high level examples)	Demonstration Lecture Whole group/small group Individual Question/answer Exploration experimenting Differentiated teaching (addressing all senses)	Visual /auditory Presentation (students & teacher) Guided practice Evaluation (assignment) Combination of educational tools (textbook, computer, media, interviewing skills) Mapping & webbing

EWA MAKAI MIDDLE SCHOOL PLANNING CHARETTE

Field trips responsibility Life sills Research Memorization/rote Direct instruction Interdisciplinary units Whole group; vs. small group vs. one to one Peer education shadowing preserves	Use of rubrics: description of levels of performance – product Using technology: audiovisual, computers Question and answer: Exploration Differentiation: based on student styles, strengths this interest	Workshop structure (mini lesson work time closure) Researched based Best practices	Project based (hands on) Modeling or simulation Small groups field trips Exploration outside resources(Comminute business, guests & speaker

Discussion 1

The steering committees discussed the existing site characteristics to design "The Right School For Ewa"

Site		
Geographical characteristics	Community	Transportation to school
Flat & hot No trades Rain fall slightly Shade is important	1st increment - local family (little more income) 2nd increment – military a lot of homeless parents work & children stay school (the school is children's home) a lot of transient children	bus

Needs for Ewa Makai Middle School

- Student performance to bring parents to school
- Need to focus on technology to prepares children for red world
- Need to be convenient

Questions from Paul Winslow. <u>What are your expectations as educator?</u>

- Clean & safe (safe from invasion)
- Inclusion (special ED)
- Test Score & high academic Standards
- Measurable results
- Interaction among schools
- Easy to maintenance
- Welcoming admin.
- Easy accessible (prominent place)
- More integration

Discussion 2

The steering committees discussed on educational plan to design "The Right School For Ewa"

EWA MAKAI MIDDLE SCHOOL PLANNING CHARETTE

Charette 1/Day Two
March 15, 2005 (Tuesday)

Group discussion 1– Social Features
The steering committee was asked to characterize social features into physical, emotional & social characteristics to understand middle school students.

Group 1	Group 2	Group 3
7th grade	6th grade	8th grade
Brenda Lowrey, John Okinaka, Rei Kodama, Randy Ibarra, Gaylyn Nakatsuka	Marvin Yonamine, Sharene Tam, Una Chan, Debbie Nakamoto, Anne Greseth-Kim	Lydell Acosta, Nick Nichols, Ari Caracol, George Coates

Girls

	Physical	Emotional	Social
6th	4'-10" to 5'-5" 70 lbs to 140lbs Undeveloped to fully developed	Moody, impulsive, naive, worldly, immature egocentric, "mean girls", Sassy (smart mouth)	Status conscious, peers – important, asserting independence, searching for identity & role models, interest in opposite or same sex
7th	4'-0" to 5'-10" Long hair Wide range of development Puberty Willing to challenge boys (motor skills develop sooner)	Self conscious (easily embarrassed) Starting to like boys, more girls fights, cattiness, attitude/ hold grudges – do not like to be spot lighted, sager to be part of a group – helpful	Friendship run hot & cold Cliques – range of behaviors from silliness to adolescence, distancing from parents-trends/fads/make-up, peer pressure, talk a lot
8th	4'-5" to 5'-5", Average 5'-0" Weight 75lbs to 150 lbs Average 115	Reputation/what others think, peer pressure, friendships-very important, less dependent on family, rear conflicts – Differently w/resolving, love, moody, excitable, infatuated, dramatic, over reactive, super sensitive.	Popularity, not be the smart one, appearance/hygiene, boy friend/girl friend (older boys/bad boys) Appearance/hair/wake-up Material & tones – designer, wear/shoes, self-conscious.

EWA MAKAI MIDDLE SCHOOL PLANNING CHARETTE

Boys

	Physical	Emotional	Social
6th	4'-8" to 5'-7", 70 lbs to 150 lbs, undeveloped to develop	moody, active/impulsive, hormones kick in, naive to worldly, more independent, "show-off" abilities, sassy-smart talk	beginning of gang ID, interest in opposite sex, strong sense of fairness, tends to see the world as black /white (no gray), want to please – uncooperative
7th	short to tall 4'-6" to 6', coordination stars to develop, puberty, voice change, muscular, development – range, eats a lot, Need to be active, sexual awareness.	Shy-don't like to be spot lighted, attitudes-unintentional insensitivity, starting to like girls	likes/task up, challenges, travels in "packs", one or two close friends – others are acquaintances Peer pressure – more social conscious than academic
8th	5'-0" to 5'-7", average 5'-0", 80 lbs to 160 lbs, average 120	love infatuation, self-conscious, minimum-showing w/family.	Competitive hierarchy, not be the smart, not to be teased, sense of belonging, search for self identity, peer sensitivity, embarrassment, peer acceptance, appearance/hygiene

Discussion 2 - Needs for Middle school students in building based on social characteristics of middle school children

Girls	Boys
room & outdoor space that children can not hide	Indoor space
space for mediation, counseling & small groups	Alternative student activity spaces
No dead ends small group areas within larger space	Small white boards
more display spaces	Undivided showers & locker rooms

Group discussion 2– How can we create experiences in various spaces that area non-traditional?
The steering committee was asked to white a graphic script on where these learning experiences happen

Group 1 (Randy Ibarra, John Okinaka, Gaylyn Nakatsuka, Ric Kodama)

- **Performance**
  - Outdoor stage/amphitheatre (secondary gathering space)
  - Geographical markets/travel on walls, walkways and directional sighs.
  - Cultural gardens/items
  - Did you know signs/wall
  - Interchangeable tile wall mount
  - Holographic
  - Shopping mall theme
- **Art/music**
  - Showcases outside
  - Lots of color
    Broadcast technology
  - Make own CDs/make CD cover
  - Graphic arts: (space for equipment)
  - Make magazine cover to highlight events
  - Need space for media center
- **BPA**
  - Job training
  - Cooking class can open a restaurant
  - School recorded CDs/magazines should be sold
  - Agriculture could be sold
  - Metal/jewelry create items to sell

Group 2 (Debbie Nakamoto, Anne Greseth-Kim, Marvin Yonamine)

- **Administration**
  - Whole campus view (VP's)
  - Reception area with comfortable seating and family learning center (toys for kids)
  - Display area/area for student work
  - Board for student work
  - Incorporate themes in office (art, murals, etc)
  - Reading materials/training brochures
  - Touch-screen directory
  - Clerk workspace business-like
  - Shaded window for registrar (in walkway)
- **Classrooms**
  - Operable walls/projectable walls
  - One-way mirror on wall for observation of model lesson

-
  - Mini theatre in one building arts
- **Connector/walks**
  - Map (tiled in) of the world on the floor with a common area to identify famous people from different places
- **Labs**
  - Individual fully equipped labs for each science class
- **Playfields**
  - Exercise/fitness equipment, rock wall
  - Pool – simulation (looks like the ocean)

Group 3 (Una Chan, Tony Chun , Brenda Lowrey)

- **Gym**
  - Climbing wall, gymnastics
  - Self defense, ballet
  - Indoor soccer, stage
  - Multi-media (large screens for movies), art murals
  - Physics experiments to hang heavy things
- **Cafeteria**
  - Movies/TV station – broadcasts during lunch
  - Work study round tables
  - Kids set up businesses (shiatsu, manicures, snacks, etc)
  - Nutrition – learning from cafeteria workers
  - Sushi conveyor belt
  - Hostesses, wait staff
- **Kitchen**
  - Demonstration – view windows into kitchen
    Fireplace/campfires, art with food
  - Math with calories, science with nutrition
  - Food garden, organic composting/recycling
- **Large common area**
  - Human puzzles – 3D, geometric shapes, kids can build/rearrange
  - Mazes
  - Floors with game boards (wireless)
  - Amphitheater seating, walls to sit on
- **Small Common Areas**
  - Informal & formal groups
  - Walls with electronic tough game boards
  - Lockers under work surfaces/counter to create group work area & meeting space
  - Spaces that can "grow" – flexible floor plans
  - Exposed structures
- **Playfields**
  - Shade
  - Viewing area
  - Low wall (planter walls, interactive) for seating
  - Play equipment – not elementary type but for climbing

EWA MAKAI MIDDLE SCHOOL PLANNING CHARETTE

Group 4 (Ari Caracol, George Coates, Nick Nichols, Lydell Acosta)

- **Media center**
  - Large window/natural light/daylight – appealing landscape
  - Ability to have a theater room for viewing (with production component, radio/TV broadcasting)
  - Integrated sound system for assembly/meeting
  - Integrated audio/visual components
  - High ceilings/day lighting
  - Ability for reproduction, media production area, video production/editing
  - Video – conferencing component
  - "Technology WKM" copying/burning CD
- **Internet café**
  - Excitement for media center
  - The music -variety of music
  - The lounge-the comfort factor
  - The connectivity with the world/community
    Virtual reality area – to take the student to the "desired place" (student could actual be there within the actual setting –" allows to all the senses")
  - Communication/multi-media center – ability to interact in a "real" way
  - An interior garden – variety of settings from private to small grouping individual reading
  - A loft space
- **Performing Arts**
  - Presentation areas – a variety of small to large group
  - Access for dressing, costume storage and to public audience
  - Appropriate lighting/sound fabrication
    Spaces for set design/builder
  - Need to meld instructional space
    Address music, drama, play, and dance
  - Support storage space
  - Mirrors
  - Stages if need
- **Courtyards – interior & exterior**
  - Shade
  - Grass – control dust
  - Hard surface
  - Variety of act ivies
  - Display
  - Performing area
    Need private area for dressing
  - Audio/visual connection
    It can be covered/protected from weather

EWA MAKAI MIDDLE SCHOOL PLANNING CHARETTE

Charette 1/Day Three

March 16, 2005 (Wednesday)
Continuat on of March 16, 2005
The steering committee members presented their homework, ***"Think Outside The Box"***, assigned on March 15, 2005.(See Charette 1-Exhibit 7)

Swipe Card "An ATM type of machine where students and parents can drive through during, before or after school hours to check or print out homework assignments, course syllables, etc Each student will be assigned a pin no. and must have his/her I.D. card" (Lydell Acosta)

Holographic Launching PAD – "holographic launching PAD that is networked in all rooms. What is projected in one room can be replicated simultaneously in all the other room" (Anthony Chun)

A Miniature Golf Area - This may integrate the health and fitness aspect, with environmental awareness – greenery, gardening, water conservation and also enable students to display their artistry through structures that they construct (science ideas can be used) Also provide space to "hang out" during breaks for non-participating students Business/marketing strategies can be implemented. (Ari Caracol)

"Four Season Center" & "interactive Center" – Learning about weather, projection on wall, Kiosk at Learning Center (Una Chen)

"College World Room" – have an interactive room with big screen TV's connected to college websites around the nation. Students can view college web cams and take campus tours from this room, get in depth information about campuses, weather reports, community and campus life. This way, students realize that there are many options besides the university of Hawaii system (Marvin yonamine)

Scanners - that assist support staff to check in/out students from their offices – logging down time in/out for attendance. This will Require students to have their ID's (John Okinaka)

"Theme Park Setting" – enters campus on a roller coaster. "Lunch" cage in a big tent along with assemble/drama/performance for P.E. we would have an "Olympic settings" track/field. Environmental would be relying on solar Powers/wind/ocean/some how create powers from volcano (Randy Ibara)

Herb Garden – fragrance/aromatherapy, taste/flavor foods, cultivation lessons
Stress relief rubber room or area - soft sculptures –lounging, stretching, and varying bouncy surfaces
Obstacle course around campus – jumps rope route
Community events – jingle bell caroling contest in costume (include llima int)
Forum stage – impromptu performances
Outdoor Mini Amphitheater - with fenced seating, surrounded by tall trees for Shakespeare play and/or poetry readings

EWA MAKAI MIDDLE SCHOOL PLANNING CHARETTE

Discussion on FAD & possibility of Ewa Makai Middle School
Revised FADS (Brenda Lowrey & Nick Nichols) (see Charette 1-Exhibit 8)

- 27 general classrooms
- 9 Science classrooms
- 4 FSC
- 2 Resource rooms

Ewa Makai Middle School can be:

- Core Classroom groupings
- 100 + students
- Wheel within the core group
- Wheel courses – keyboarding, media, gardening, etc

"The trend for Middle Schools is for smaller learning communities and rooms that can be used for multi-proposes" (Paul Winslow)

- Need to build School for communities
- Need a room for staff development center for teachers
- Comprehensive alienation

Discussion on Functional Relationships (see Charette 1-Exhibit 9, 10, & 11)

- Non – traditional
- Cluster for multi grades
- 2 line or 3 line relationship to classrooms
- Cafeteria proximity to classrooms or kiosk
- Student center flows cafeteria

Opportunities:

- Virtual room (2)
- Health – fitness center (1)
- PE
- Dance (1)
- Elective(1)
- CSAP (Comprehensive Student Alienation Personal) (1)

Assignment for the Steering Committee "Curriculum Ideas"
The Steering Committee was asked to list all curriculums that they can think of for Ewa Makai Middle school's students

EWA MAKAI MIDDLE SCHOOL PLANNING CHARETTE

Charette 1/Day Four

March 17, 2005 (Thursday)
Continuation of March 16, 2005
The Steering Committee presented their ides of curriculum for Ewa Makai Middle School students to create exciting space into the building (see Charette 1-Exhibit 12)

- **"KALO to POI"** (environment studies) - Interdisciplinary unit involving, English, math, S.S. science, and industrial arts.
- **Chin Up Bars a long hallways** – levels around perimeters of circulation spaces for seating and performing
- **Environmental Study, Health & Fitness, performing arts** – Exhibition, outdoor stadium coliseum with bleachers for spectators.
- **Gastro turf.** That could be marked for sporting events also good for performances.
- **Plug** – ins for saved system or integrated speakers.
- **Solar system** - Solar powered lighting fixtures.
- **Navigation** – Hawaiian, Polynesian, galactic.
- **Roller coater theme park**
- **Power** – water sources
- **Polynesian navigation theme**
- **Performing Arts** – stations = footprints, theater in the round, black room
- **Clubs**
- **Recycling**
- **Water sports** - sailing, paddling
- **Fitness** – 24 hour fitness, Olympic stadium
- **Clear Waste Piping** - to see where water goes
- **Individual sports** - biking, rock wall, fishing
- **Circular Art Center/Class** – Circular classroom with deter display

Exercise 1
The steering committee had a group discussion to conceptualize the functions and elements of a neighborhood. (see Charette 1-Exhibit 13-17)

Group 1 (see Charette 1-Exhibit 13 & 14)	Group 2 (see Charette 1-Exhibit 15 & 16)	Group 3 (see Charette 1-Exhibit 17)
John Okinaka	Brenda Lowrey	Lydell Acosta
Marvin Yonamine	Una Chan	Rie Kodama
Anne Greseth-Kim	Ari Caracol	Nick Nicols
Tony Chun	Randy Ibarra	Sharene Tam
Gaylyn Nakatsuka	Debbie Luning	George Coates

Discussion on Site Condition
Ken Santana from Mitsunaga & Associates, Inc. participated to discussion on Site Condition

- Driveway – north
- Accel lane
- Sewer pump station
- Main entrance – right turn only
- City wants 2 lane in & 2 lane out
- Large stacking area useful in afternoon
- Consideration on how to children get to school
- 2 parking
- buses – 8 buses/50'=400 sqft
- hook up storm drain system
- pedestrian access from adjoining site

EWA MAKAI MIDDLE SCHOOL PLANNING CHARETTE

Charette 1/Day Five
March 18, 2005 (Friday)

Presentation by Design Team
The Design Team developed three schemes based on options, which the steering committee developed on March 17, for review and comments

Scheme One (see Charette 1-Exhibit 18&19)
As presented by Paul Winslow
- Single building
- Cluster of buildings
- Dining & Media at center

Scheme Two (see Charette 1-Exhibit 20)
As presented by Caroline Lobo
- Single building

Scheme Three (see Charette 1-Exhibit 21)
As presented by Steve Worng
- Traditional building

Discussion on conceptual floor plan
- Cultural elements such as sense of family & community
- Middle school culture – socialization
- Story building for safety/security
- For fitness, need funning track around campus
- Recycling program for environmental studies
- Landscape
- College campus feel

Group Discussion
The steering committee was asked to develop three schemes by design team

Group 1 (see Charette 1-Exhibit 22)	Group 2 (see Charette 1-Exhibit 23)	Group 3 (see Charette 1-Exhibit 24)
Debbie Luning Galyn Nakatsuka Marvin Yonamine Ari Caracol Rie Kodama	Una Chan Lydell Acosta Marvin Yonamine Anne Greseth-Kim Janna Mihara	Anthony Chun Randy Ibarra John Okinaka Sharene Tam
Split play field – buffer on street side Admin/media – together around dining Corner classrooms	Story classroom and one story Covered play court near lunch	Mall concept-shopping mall

Open Discussion on Charette 1
- Difficult time in beginning but eye opening
- Good that the design team asked questions to draw it out
- For security purpose, one building is better
- Recycling area (environmental feature)
- Landscaped zone

Question: What should we be most sensitive to?
- Culture – sense of family, sense of community, middle school culture
- Place to gather
- Security after school hours

Question: is there anything to watch out for?
- Concern of stairwells
- Safety & security on outside

EXHIBITS – NOTES TAKEN DURING CHARETTE ONE

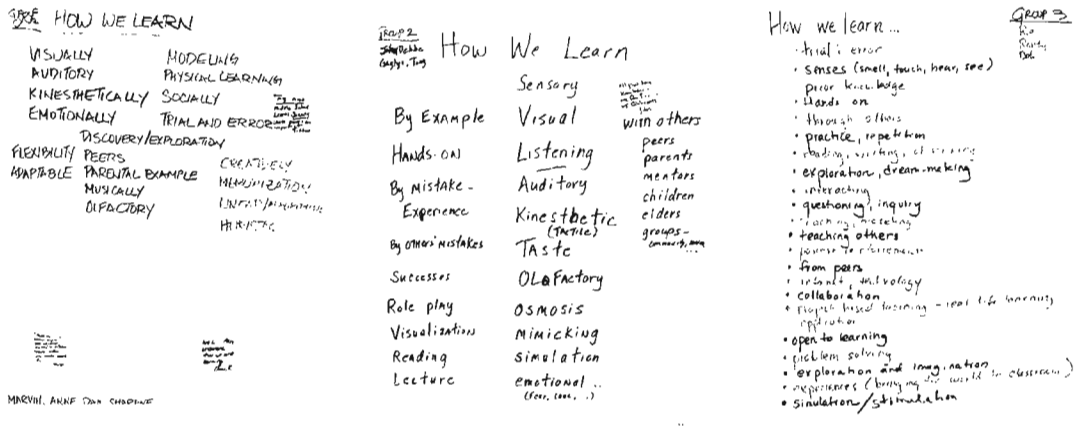

WAYS WE LEARN:

GROUP 4
Lynel, Art, Dave
NICK

- 5 Senses / Physical Learning
- By Reading
- " Speaking
- " Tactile, Auditory, Visual
- " Modeling / Imitation
- Motivators for LEARNING
  - Rewards: · Intrinsic / Personal
    · Extrinsic / Reward Tangible
- Exploring · Experimenting
- Trial & Error · Asking question
  · Researching
- Repetition
- By Coaching
- Small Group & Big Group
  - Assigning roles & Responsibilities
- Setting EXPECTATIONS
- Standards - Setting Standards
- By sharing / discussing
- Right tools
  - Proper equipment - from paper/pencil to technology
  - Encouragement
  - Comfortable
  - Suitable ENVIRONMENT
- Drills
- Practice
- Inspiration
- Out of Necessity / Survial
- EXHIBITION

Where We Learn

Grp 2
John, Debbie
Guy Lyn, Tony

Home	Survival / Practice Life skills, Values — repair, cook, shop, ... skills,
School	social skills, ways, is or 'how' to Learn - structure / rules / expectation / protocol : 'mean
On a Team	- input from others, motivation to succeed competition, How to work together How to Listen
Library	research, social,
By myself	About myself - reflection my actions affecting others
In traffic	patience, maneuvers - change lanes "motor" skills., emotional release
Under Stress	- Defensive actions, Coping skills, To be efficient - get Task done (Time Management)
at WORK	- What you do is "real" - To be efficient - get TASK done (Time management) How to do new things w/ around respon. attitude
Recreational Activities Golf, Tennis, Baseball,	sportsmanship, types of grass, how to predict weather, personal limitations, - excuses, striving for excellence ... desire to win
Shopping - in line cashier - aisles - Browsing	information, patience, social interact observation value of $ - comparison shopping time management, product information route planning,
In the Shower / on the toilet	day's reflection, reading, planning for next day / future, ...

GROUP #1 PLACES WHERE WE LEARN

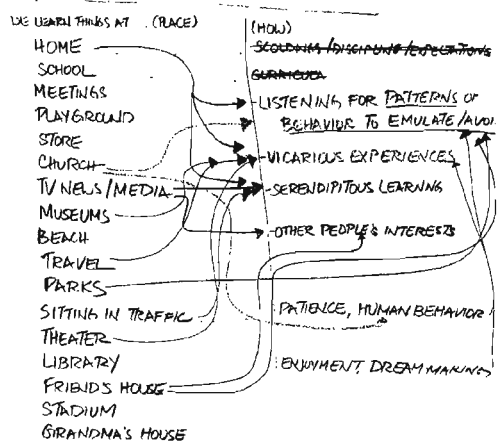

☆ YOU CAN LEARN ANYWHERE YOU ARE AT EVERY WAKING MOMENT BY LISTENING, OBSERVING AND EXPLORING. ☆

Great thoughts!
M. Nichols

Places where we learn...

#3

- at home
- lunch w/ friends - rest.
- at the car wash
- at the mall
- airport
- parties
- park, beach
- sporting events
- movies
- in the bathroom
- in the car, driving
- field trips
- anywhere, in a line, waiting
- at Starbucks
- Bookstores, Library
- Home Depot
- Swap Meet

- communication, tolerance
- social interaction, etiquette
- observation
- budget, math, comparison shopping, check writing
- following directions
- conversation, up on people skills, current events
- swim, skills in sports
- team building, good sportsman ship structure & skills
- be quiet, sit still, think, predict
- read, think, observation, problem-solve
- map reading, directions, vocab
- observation, experience bldg.
- people watching - behaviors - thinking

At THE DENTIST OFFICE	BY Reading Magazine
Bathroom	Quiet private space for reflect thinking
ANYWHERE/EVERYWHERE	ANALYSIS
TRAFFIC	Frustration/How can it be better/OBSERVATION/COMPARISON
Restaurants	By the senses/Being comfortable/nourished/new experiences
TV/MOVIE	OBSERVATION
Shopping Malls	By Simulation/Compare contrast/Think about analogies/Inspires
Library	ABILITY TO EXPER things you WOULDN'T BE able to do
Theater	Interaction/Cooperation
Plays	TEAMWORK/strategy/Prob. Solving/Good of Team
Sports	
Games	
SPECIAL EVENTS	
WORK	BY Interaction w/others BY BEING DIRECTED
SCHOOL	
BEACH	BY THE SENSES/EXPERIENCE HANDS ~~SET~~/EXPLORATION

HOME

PEOPLE

LITERAL

COOPERATIVE

DEPENDENCE

OTHERS

GROUP #1 TEACHING STYLES/STRATEGIES

LECTURE
DICTATORS (DON'T QUESTION)
FACILITATIVE
PROJECT-BASED LEARNING
EXPERIMENTS/SCIENTIFIC
HANDS-ON LEARNING (ART, MUSIC)
MODELING/SETTING AN EXAMPLE
DISCUSSIONS
FIELD TRIPS
CIVIC RESPONSIBILITY
LIFE SKILLS
RESEARCH
MEMORIZATION/ROTE
DIRECT INSTRUCTION
INTERDISCIPLINARY UNITS
WHOLE GROUP vs SMALL GROUP vs ONE TO ONE
PEER EDUCATION
SHADOWING PROGRAMS

Grp 2 Teaching Styles

Using Peers : Peer tutoring, pacing, Groups, role model, High Achievers mentor - [illegible]

Lecture

Trial and Error : Series of scaffolding Activities (Arrived in levels)

Coaching :

Group projects :

Direct St particular method : role playing, projects

Use of examples

Exemplars (High level examples)

Use of Rubrics : Description of Levels of performance - product

Using Technology : Audiovisual, computers,

Question and Answer :

All to different teaching styles ex. rubrics, Differentiation

Exploration

Differentiation : based on student styles, strengths, interest.

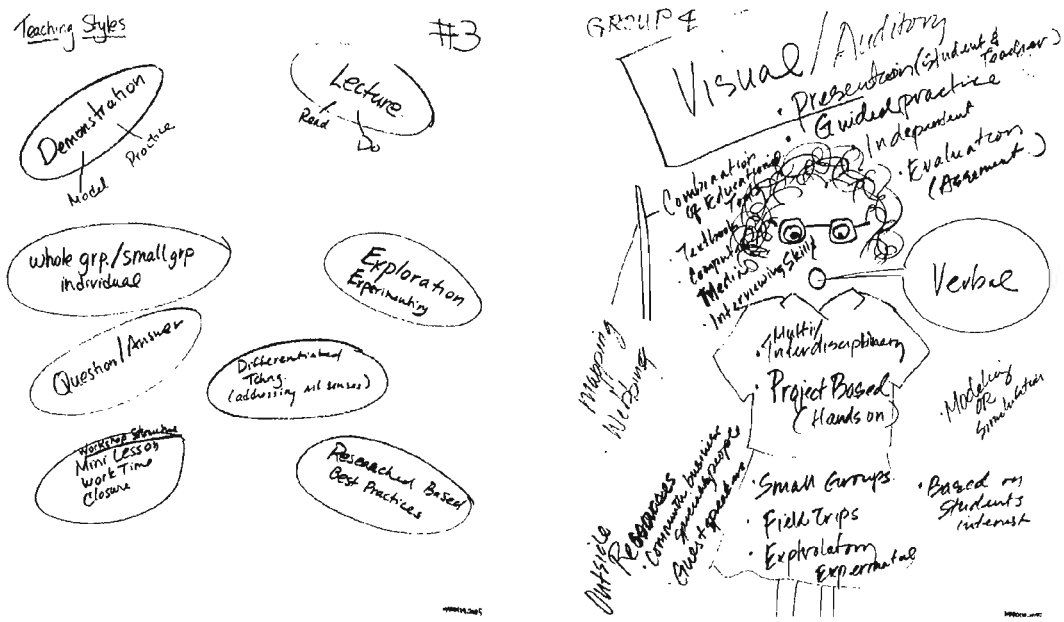
Teaching Styles
#3
Demonstration
Model
Practice
Lecture
Read
Do
whole grp./small grp
individual
Exploration
Experimenting
Question/Answer
Differentiated Tchng.
(addressing all senses)
Workshop Structure
Mini Lesson
Work Time
Closure
Researched Based
Best Practices
GROUP 4
Visual/Auditory
· Presentation (Student & Teacher)
· Guided practice
· Independent
· Evaluation (Assessment)
Combination of Educational Tools
· Textbooks
· Computer
· Media
· Interviewing Skills
Verbal
Mapping
Webbing
· Multi/Interdisciplinary
· Project Based (Hands on)
· Modeling OR Simulation
Outside Resources
· Community business
· Speech people
· Guest speakers
· Small Groups
· Field Trips
· Exploration
Experimental
· Based on Students interest

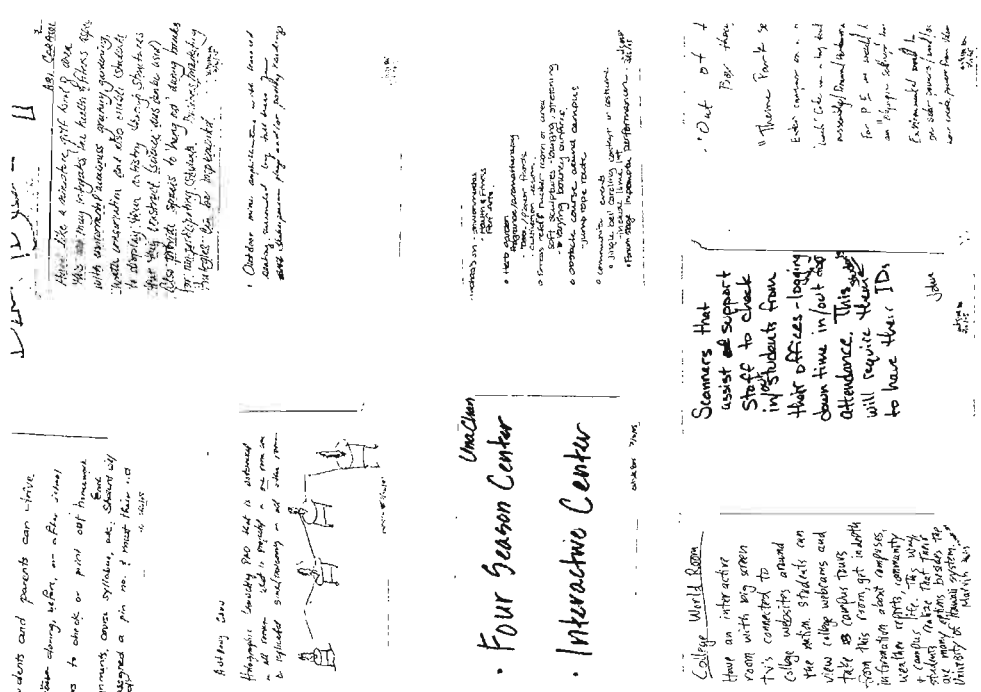
Students and parents can drive
Thinking during, before, or after visual
have to check or print out homework
assignments, cover syllabus, etc. Student will
be assigned a pin no. & must their ID
Auditory Cover
Hypnotic Lovely Pad that is outlined
in all room. Lead to Project in the room on
a replicated small/economy in all other rooms
Una Clara
· Four Season Center
· Interactive Center
College World Room
Have an interactive
room with big screen
tv's connected to
college websites around
the nation students can
view college webrooms and
take campus tours
from this room, get in depth
information about campuses,
weather reports, community
& campus life. This way
students realize that their
are many options besides the
University of Illinois system.
Marvin Wis
Scanners that
assist support
staff to check
in/out students from
their offices - logging
down time in/out for
attendance. This student
will require their ID
to have their ID.
"Theme Park"
Out of the
Box thru

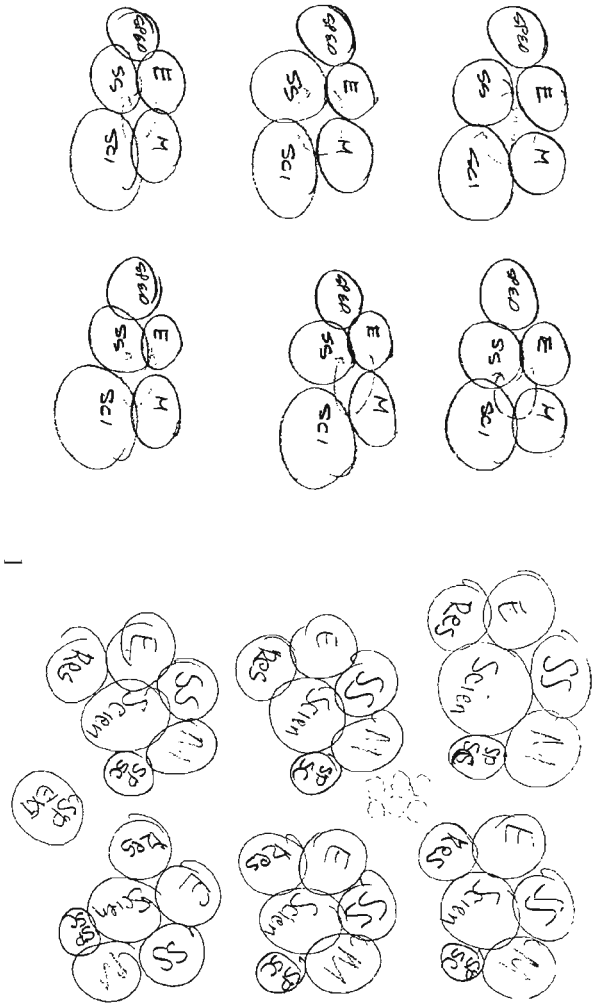

FADS #s

LA 6
MATH 6
SS 6
Science 6

18 General Clsrms.

+ 2 Health
4 PE
5 Supplementals
1 General 6th Grade

13 Special Ed.
4 FSC
9 Resource

SPECIALTIES
1 ARTS & CRAFTS
2 MUSIC
1 BUSINESS ED.
1 INDUSTRIAL ARTS

OPTION / RATIONALE
provide 9 groupings to facilitate multi-track

LA/ 9
Math/ 9
SS/ 9
Science 9

27 (18+9)
(6+3)

from 9 SpEd Resource
- 3 Science
- 4 General
- 1 General 6th Grade
- 2 Health
- 2 PE or 2 Supplemtls

left/2 Resour left to split into 9 off/conf

4 FSC
2 Resource (to be split into 9 office/tutoring spaces)

left 0 Health
2 PE
5 Supplementals
+ Specialties

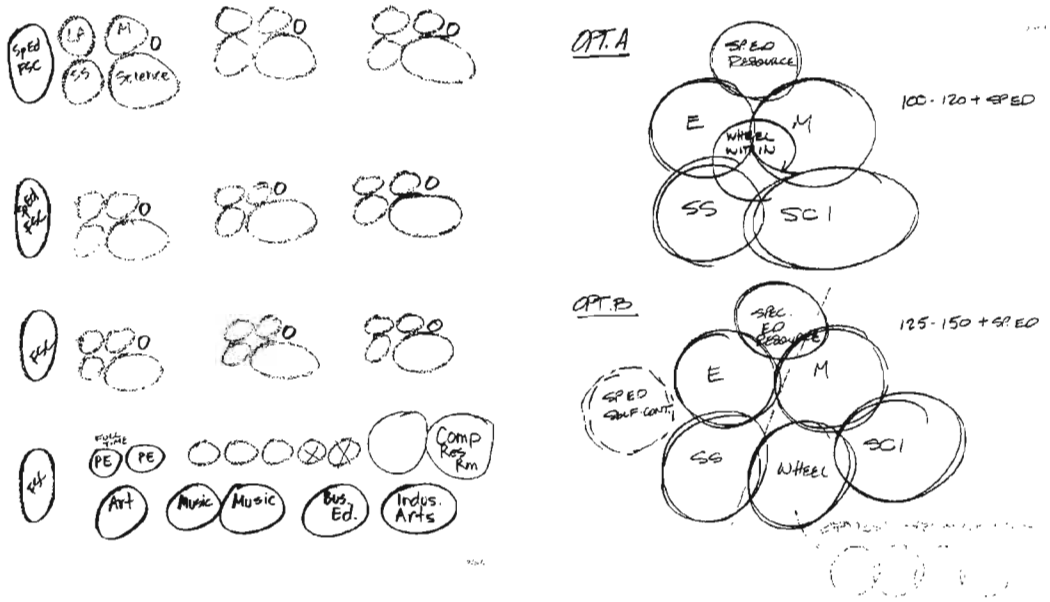
SpEd FSC
LA
M
SS
Science
FSC
PE
PE
Art
Music
Music
Bus. Ed.
Indus. Arts
Comp Res Rm
OPT. A
SP.ED RESOURCE
E
M
WHEEL WITHIN
SS
SCI
100 - 120 + SP ED
OPT. B
SPEC. ED RESOURCE
E
M
SP ED SELF-CONT.
SS
WHEEL
SCI
125 - 150 + SP. ED

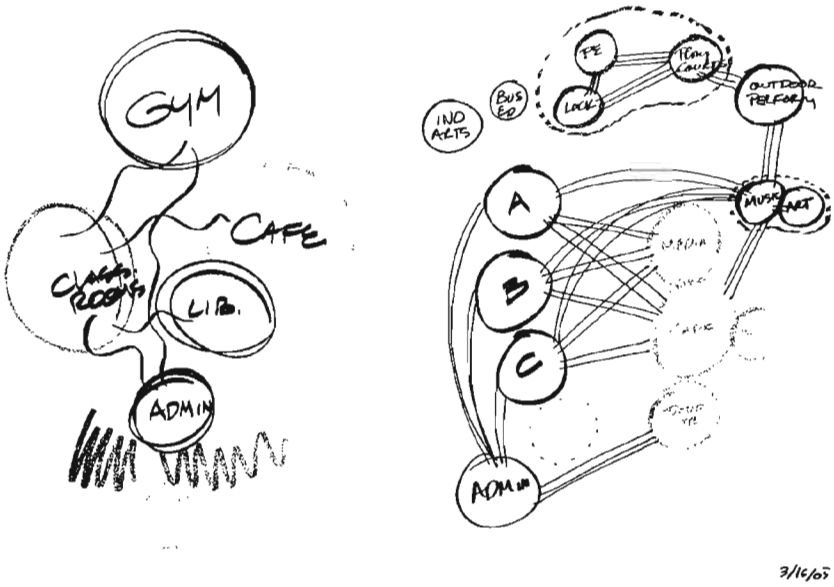
GYM
CAFE
CLASS ROOMS
LIB.
ADMIN
PE
LOCK
BUS ED
IND ARTS
OUTDOOR PERFORM
A
B
C
MUSIC
ART
ADMIN
3/16/05

Grp 1

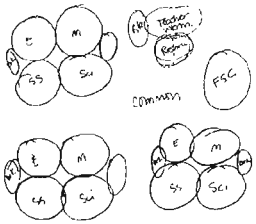

Grp 1

Grp 1

Option 2

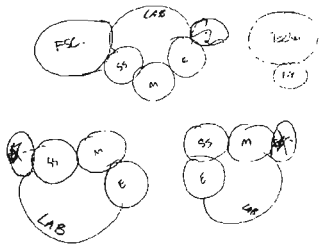

Grp 1

Option 3

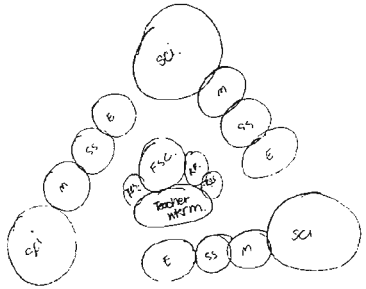

Performing Arts Stations - footprints

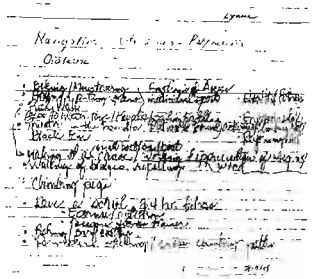

Environmental Study: Health + Fitness: Refining Costs

Stages - Exhibition

Outdoor Stadium/Coliseum with blocks for spectators. Stage use in lower scenes also half that track be blocked off for viewing events also good for performances also for dual events of outside speakers. Select primed defining school

Learners will have an inviting non-interfering work of presents indicators to friends. Should still specify this in Environmental Studies classes, etc.

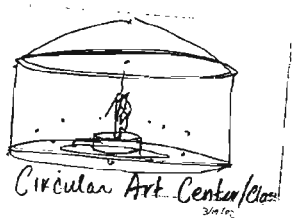

chin up bars along hallways

levels around perimeters of circulation spaces for seating & performing

clear waste piping to see where water goes

School whole specific activities in + for curriculum - Environment - Performance Health/fit

School
E - P - H/F
curriculum

Outdoor Stadium → Health Int → curriculum

Environment inner-solar-supply activities sources, water, waste supply

Roller Coaster - "Science Ride" (Could be component of other classes) as well as homework

Environmental Studies - Lab

Kalo to Poi

Interdisciplinary Unit involving English, Math, SS, Science, Industrial Arts

Group 1

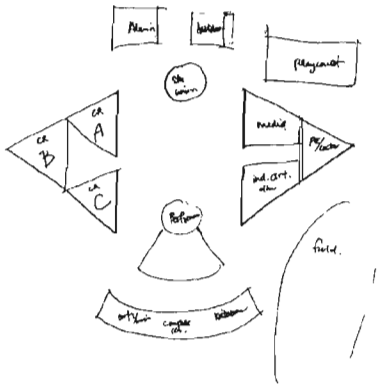

Opt. 1

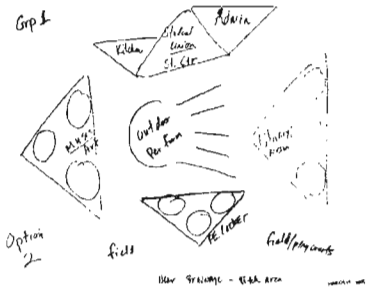

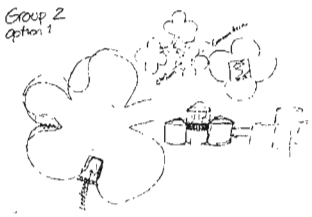

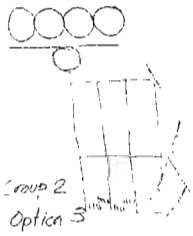

OPTION 5
Grp 2

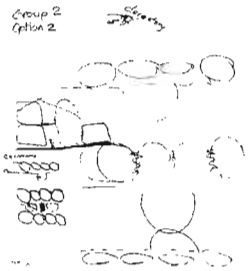

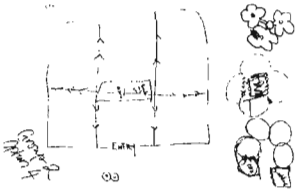

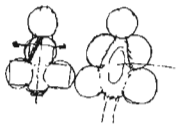

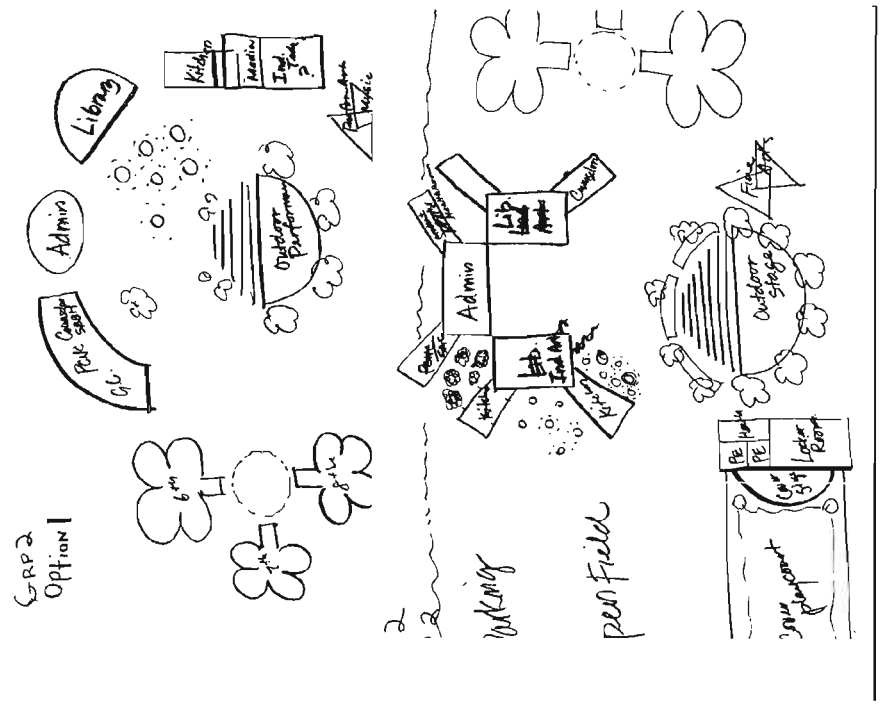
Group 2
Option 1
Admin
Library
Outdoor Performance
Admin
Outdoor Stage
Locker Room
Parking
Open Field

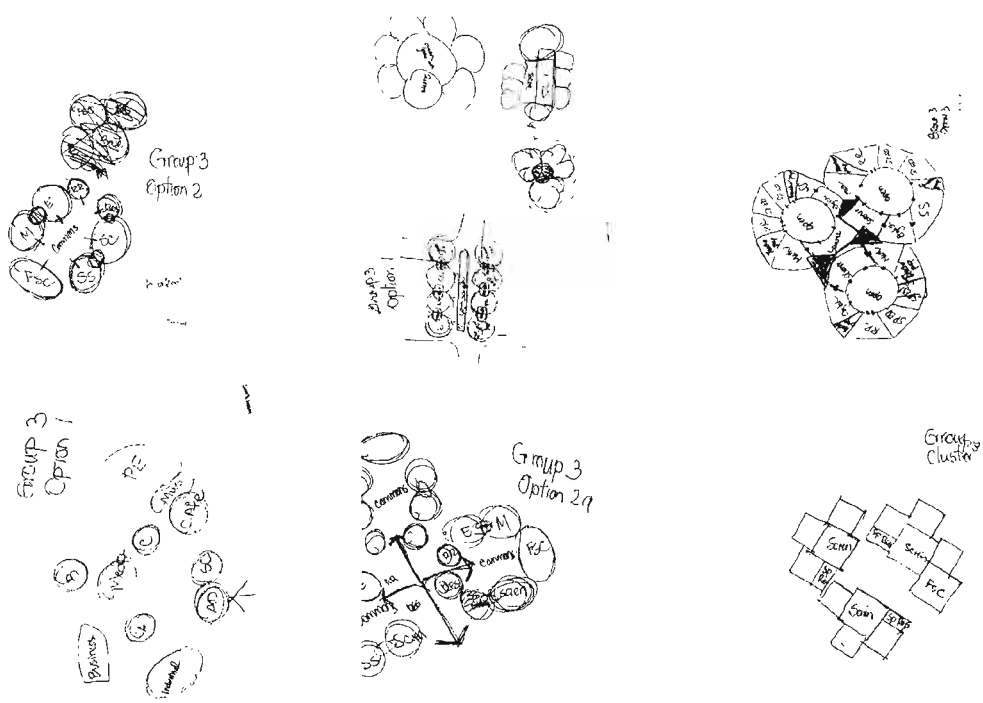
Group 3
Option 2
Group 3
Option 1
Group 3
Option 2a
Group 3
Cluster

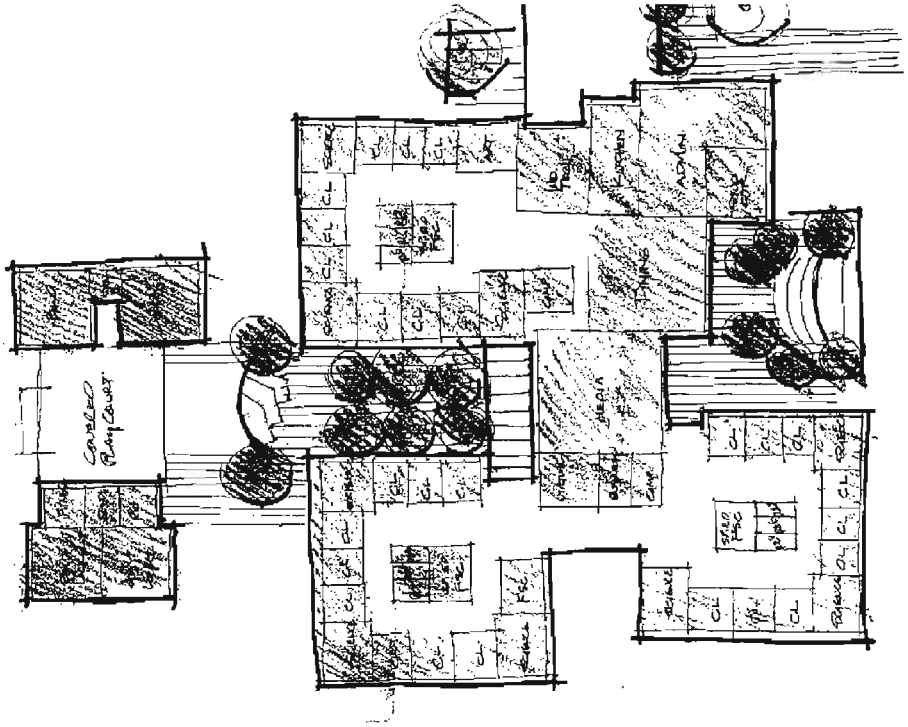

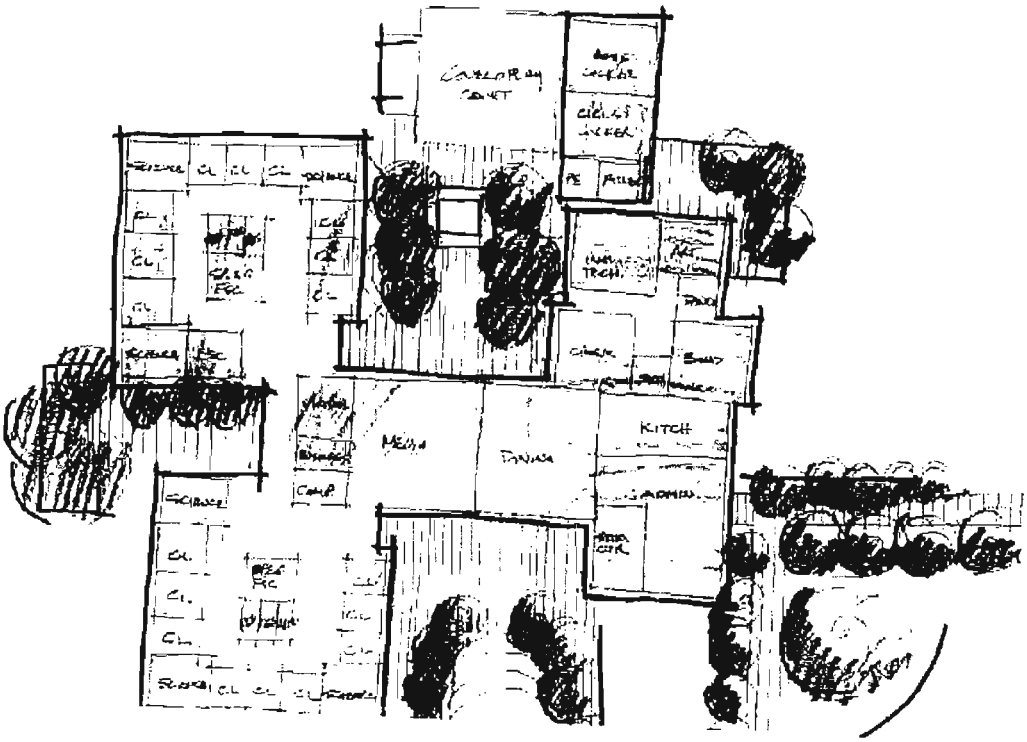
KITCH

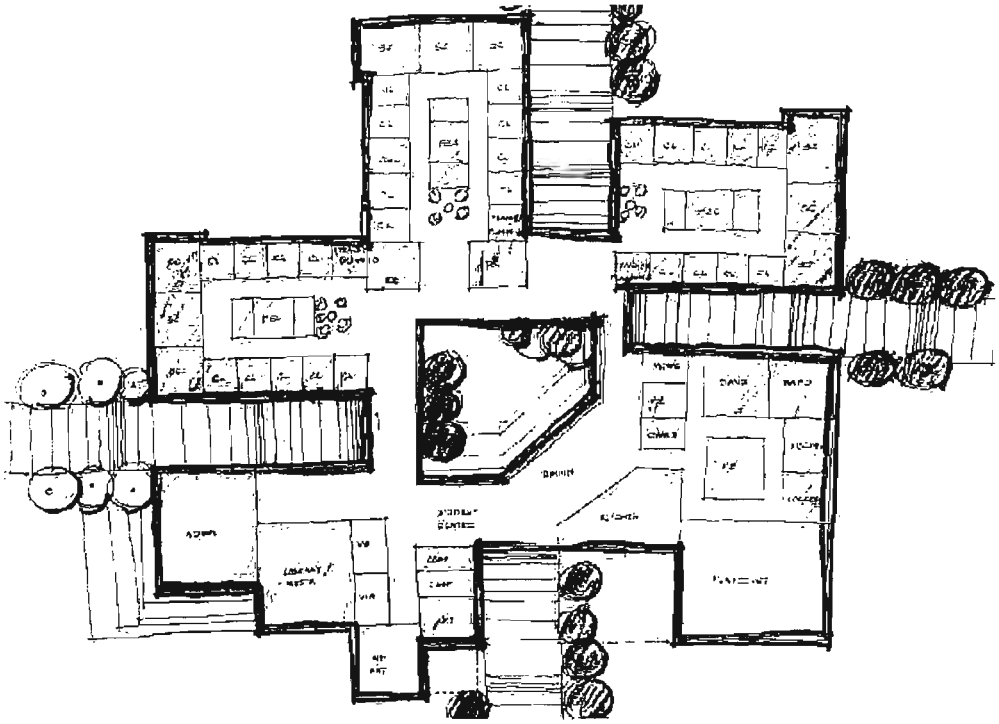

C

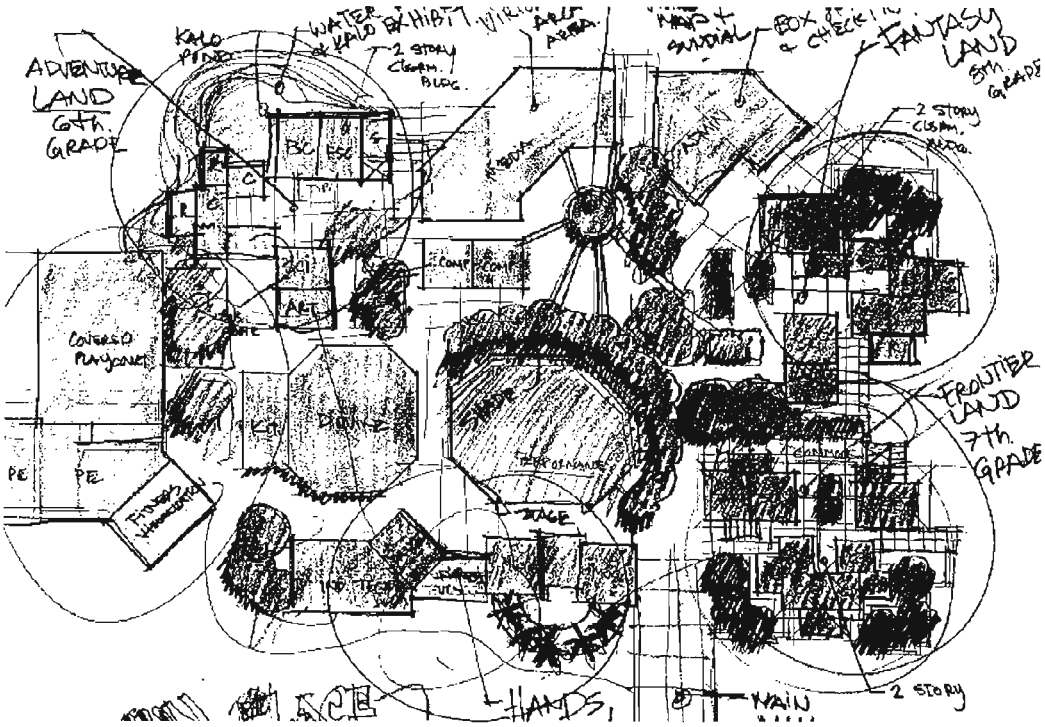
ADVENTURE LAND 6th. GRADE
KALO POND
WATER & KALO EXHIBIT
2 STORY CLSRM. BLDG.
MAP + SUNDIAL
FANTASY LAND 8th. GRADE
2 STORY CLSRM. BLDG.
FRONTIER LAND 7th. GRADE
STAGE
HANDS
MAIN
2 STORY

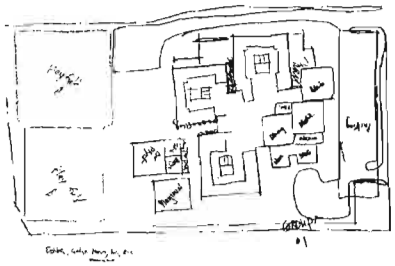

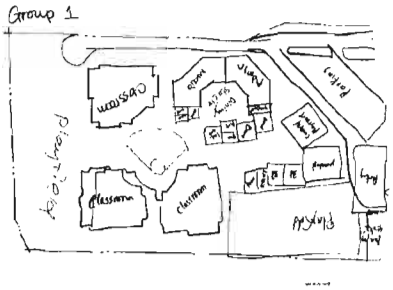
Group 1
classroom
classroom

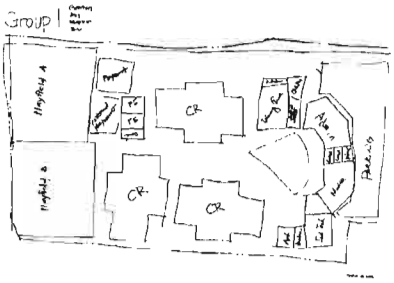
Group 1
CR
CR
CR

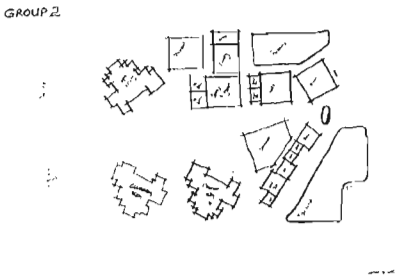
GROUP 2

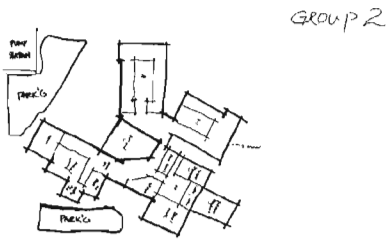
GROUP 2

GRP 2

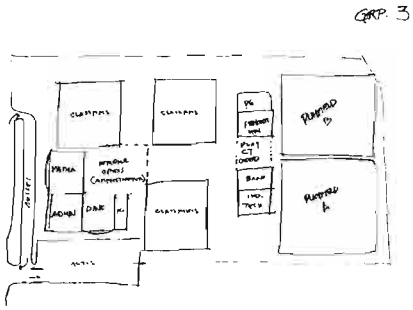

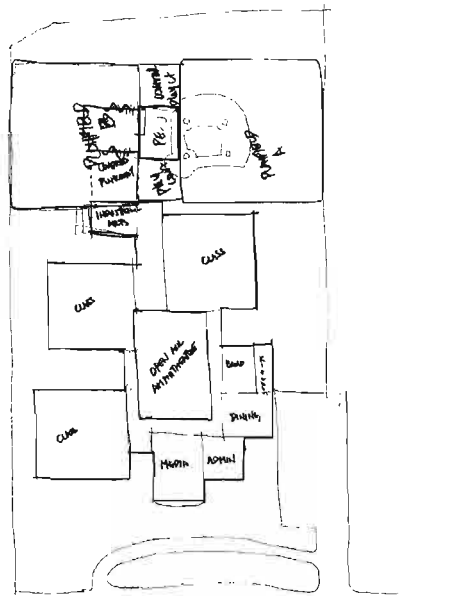

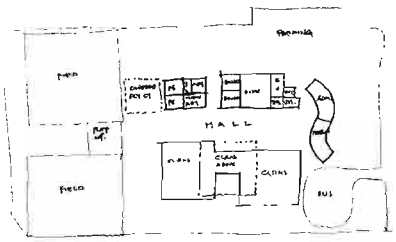

EWA MAKAI MIDDLE SCHOOL PLANNING CHARETTE

Charette 2/Day One
April 11, 2005 (Monday)
Continuation of Charette 1

Review of the last Charette
Overview of the Charette 2

- The Goal of this meeting are:
  - To accommodate various learning styles, teaching styles and curriculums to a building.
  - To relate a building to students
- Homework for the steering committee - **"Specific Two Ideas of Curriculum in a Building"**

Exercise – how to relate various learning styles to a building

- Virtual room I MAX rm. – movable furniture
- Operable walls- tackable surface or magnets
- Bigger sinks in every classroom
- Able to see in classroom
- Classroom to hold about 50 people
- Natural energy lab
- Sliding doors with windows – open to lanai
- Science classroom – connect to outside
- Admin/counseling center – open atmosphere
- Open ceilings – usage
- Art curriculum – display walls
- Direction's signage
- Video cameras
- Band – dual entry way
- Loading dock
- Math – electrically connected
- Learning is social – lot of windows – glass walls
- Conveyer belt to stage
- Rooms should have enough space for activity oriented lessons - commons good but have respect for other people
- Conference room for 6-8 people

Group Discussion – Curriculum (what you learn/how we take care of the students) (see Charette 2 – Exhibit 1)
The steering committee was asked to discuss about curriculums.
Group 1 (Tony Chan, Debbie Luning, Annette Nishikawa)

- **English & Social Studies**
  - Elevated or sunken performance areas (mini)
  - Balcony/loft area (performances)
  - Large space – project areas
  - Flexible groupings – 1/3, 1/3, 1/3 – physical environment supports (large group/small group/independent study)
  - Shortage space – for student projects
  - Display area for student work
  - Writing process/workshop - real life, news room, publishing
  - Personal space – physical features
  - Comfortable reading area – library setting, shelving/ built in for books, area conferencing
  - Elmo's, over head – need for shortage

EWA MAKAI MIDDLE SCHOOL PLANNING CHARETTE

Continuation from previous page

Group 2 (Gaylyn Nakatsuka, Nick Nichols, Marvin Yonamine, John Okinaka)

- **Business/Technology**
  - Recoding Studio (visual/audio) > marketing product (licensing, distribution etc.)→Final product being utilized by public,
  - Partnerships w/ knowledgeable personal access of space (resource room) of conference rms.
  - School promotion over web including partnerships/community
  - Recycling contra. – Open to public eventually, run as a business-self-sustain

Group 3 (Ari Caracol, Randy Ibarra, Anne Greseth-Kim, Brenda Lowrey)

- **Math/Science**

Math

- White board space
- Group tables (flexibility in furniture)
- Measurement indicators throughout classroom (feet, volume, area etc.) metric
- conversion smart Projection screen (built-in) to display concepts/formulas
- Solar pump – water column

Science (6th-physical, 7th-biology, 8th-earth/space)

- Movable lab tables
- Rain water catchments
- Technological capabilities
- "Special" trash receptacles
- Outdoor sink/accessibility
- Built-in aquarium/terrarium (walls displays)
- Built-in science refrigerator
- High ceilings (physical science)
- Micro-Elmo scope
- Sky lights (experiments)

Group 4 (Lydell Acosta, Una Chan)

- **Art/Music**
  - Elements & principles (design)
  - -2 dimensional – drawing, painting, silkscreen
  - -3 dimensional – Sculptural ceramics, wood silkscreen
  - Spot lights in hallways also a mini art museum to display work (for public, auction)
  - Convert work area
  - Drawing paints/potters where
  - Dry Rack for clay – open gate
  - Large windows
  - Unfinished floor for cleanings

Presentation of the Site Plan – by Ken Santana, Civil Engineer from Mitsunaga & Associates, Inc

- Can reuse rain for water fall
- Use of colors on ADA parking

Comments from the steering committee:

- Need to discourage students crossing the streets
- Need to create fence

EWA MAKAI MIDDLE SCHOOL PLANNING CHARETTE

Presentation by Architects

The Design Team developed ten schemes as an architectural site plan for the steering committee's review and comments.

	PRO	CON
SCHEME A (see Charette 2 - Exhibit 2)	Admin, student center & Media - centralized, closed, easy to serve Student's needs Cluster type	Not enough variety of fitness/environmental features
SCHEME B (see Charette 2 - Exhibit 3 & 4)	Good flow to the campus Can be install solar panel for elec. Can be install water catch Open courtyard Impressive entrance Like second story Individual courtyard space Many walls for student to display	Covered play court seems to be far away from the rest of campus Sac room too far away from admin.
SCHEME C (see Charette 2 - Exhibit 5)	Administration & student center/dining area all in one area	Long straight central corridor
SCHEME D (see Charette 2 - Exhibit 5)	Open feeling Individual building Courtyard to support the performing Covered courtyard Track around the campuses for usage of fitness A lot outdoor areas for learning activities Media has two entrances	Amphitheater is missing Want mini art museum Not enough space
SCHEME E (see Charette 2 - Exhibit 6)	Classrooms all in one general area Very compact overall design Cluster design Layout to facilitate ease of movement to all components Science right next to all classroom Media located on center Band bldg Covered to performance area Many walls for student to display	Kitchen next to admin. (Noisy)
SCHEME F (see Charette 2 - Exhibit 6)	Media located on the campus Courtyard can be used for art/sculpture garden Good connections to outside from science & other classrooms	
SCHEME G (see Charette 2 - Exhibit 7)	Easy access to media, dining & admin. By all grade level class Open spaces for kids/visitors to flow into bldg.	Amphitheater is missing Location of Dining & Media
SCHEME H (see Charette 2 - Exhibit 7)	Amphitheater entrance focus on the performing arts Opportunities for outdoors accessibility Elective areas easily accessible	Kitchen next to admin. (Noisy)

	Enclosed areas Securing building High ceilings for mobile art, sculpture display	
SCHEME I (see Charette 2 - Exhibit 8)	Classroom pads (open to the mall) Amphitheater is focal point One story (security reasons) Science classroom has outdoor access	Admin is far from dining
SCHEME J (see Charette 2 - Exhibit 8)		Location of covered play & play court

Discussion on advantage of single building educationally

- Interaction among students and teachers
- Comfortable to teach inside of the building
- Plantation does not work
- One entry for security
- Easy access
- More available space

Discussion on features of learning environment. (see Charette 2 – Exhibit 9)

The Steering Committee discussed on the relationship of school features in order to best exhibit the learning environments of Ewa Makai Middle School.

- Need to have extra desk space for teacher's
- Need have one teachers' planning room per one cluster
- 6th, 7th and 8th grade should be one cluster for social matter
- Math, English, science and social studies should be one group
- Media center should be up front as symbol

Decision

The steering Committee selected Single Building Scheme for the best learning and teaching environment for Ewa Makai Middle School.

Charette 2/Day Two

April 12, 2005 (Tuesday)

Continuation of day one, April 11, 2005

Presentation by Architects

The Design Team developed three single building schemes that were selected from by the steering committee on April 11, 2005.

	PRO	CON
SCHEME A **by Steven Wong** (see Charette 2 - Exhibit 10)	Commons Rotate plan then, it works	Dining No social reaction
SCHEME B **by Caroline Lobo** (see Charette 2 - Exhibit 11)	Amphitheater Focus Sense of security Family Science project space College campus feel Student center on center Centerized campus gives more chance for students to socialize Administratively works	
SCHEME C **by Paul Winslow** (see Charette 2 - Exhibit 12)	Dining Funneling effect Entrance Commons Single bldg Maintenance, shopping mall space	Play court integration

Overall comments on three schemes:

- Student entry from "C" to "B"
- Performance – eave studies
- Different school

Discussion on Administration (see Charette 2 – Exhibit 13)

- Lobby should be next to the clerk and general office
- Need separate window for attendance clerk

EWA MAKAI MIDDLE SCHOOL PLANNING CHARETTE

Discussion on Special Education (see Charette 2 Exhibit 14)

- Downsized FSC
- Downsized resource to 450 S.F
- Proximity to nurse-seizures
- Timeout room – no window
- Operable wall between resource room and 600 S.F. each
- Reduce one FSC at CSAP to 980 S.F and save 3775 S.F.
- 4 self contain classrooms
- half classroom size and 9 classrooms or full classroom size and 6 classrooms
- operable partition divides on big room
- conference room for special education
- access to nurse and drop off
- kitchen, sink, stove, living room, bed room
- one of full self contain classroom need to be close to drop off

Paul Winslow had small group meeting with PEOSON"S NAME to specify the needs for special education (see Charette 2 – Exhibit 14)

- shower - curtain
- desk chair – no cross leg chair
- 6 computer stations
- enough space for special education technology (such as double size computer screen)
- movable computer desk work better
- wall cabinet is not useful for children
- base cabinet works better for children
- high shelving for teachers
- access from outside
- whiteboard and tackboard
- no colors

Caroline Lobo had small group meeting with PERSON"S NAME to clarify the relationship and the needs for Arts (see Charette 2-Exhibit 15)

- 10 computers min.
- art storage
- storage
- drawing rack
- base cabinet
- display area

EWA MAKAI MIDDLE SCHOOL PLANNING CHARETTE

Charette 2/Day Three

April 13, 2005 (Wednesday)
Continuation of April 12, 2005

Presentation by Architects
The Design Team developed one schematic floor plan based on discussion on three schemes on April 12, 2005
Schematic Floor Plan – as presented by Paul Winslow (see Charette 2 – Exhibit 16)

- Tried to scale out
- Increased size of resource room
- Moved media center to left
- Made art and theater close to each other
- Created covered play court

Schematic Floor Plan for Administration – as presented by Caroline Lobo (see Charette 2 Exhibit 17)
Comments:

- Teacher's mail box needs to be relocated
- Conference room and principal room should not be seen by students coming in
- CSFF should be relocated somewhere people can not see

The Steering Committee discussed the floor plan of the administration and developed the relationship diagram (see Charette 2 – Exhibit 18)
Caroline Lobo developed 2 schemes for the administration based on the Steering Committee's comments, discussion, and diagram. (see Charetee 2 Exhibit 18)
As a result, The Steering Committee selected Scheme B
Guest Speaker xxxxxx

EWA MAKAI MIDDLE SCHOOL PLANNING CHARETTE

Group Discussion – Critique of overall floor plan

The Steering Committee was asked to criticize overall floor plan on sheet provided to improve it. (see Charette 2 – Exhibit 19-20)

Group 1	Large windows/glass walls for visual observance for computer lab, business classroom, general classroom, band room, dance room & media center. Information kiosk w/interactive screens, directional signage (school location in relation to world, island school facilities or way finding arrows) Fire access lane – use for physical fitness track World map Indoor walking 'track' Presentation area w/sunken seating Wall for viewing movies above doors at interior and exterior Built in seating or benches throughout Taro center Recycling center Planters for herbs/aromatherapy throughout
Group 2	Opportunity for cultural garden at courtyard Need for shade at amphitheater View window at media center Mini-gallery at dinning area Poles for banners at corner Display cases Large monitors for showcasing art projects Recycling Possible location for lockers under work table/counters or display top tables Kalo growing aquaculture at courtyard Operable wall to provide larger space for interdicting teaming Performance alcoves Opportunities for fitness seating that would double hopscotch or activities in floor in big area
Group 3	Transparent wall, certain amount of glass/display ability Doors to accommodate lift equipment for maintenance Consider for girls/boy restroom Kilo planting area & Hawaiian planting area/native Hawaiian plants Different shape or type of nosing for admin so that public knows it is a different building classroom Outdoor serving area, outside of the kitchen for outdoor amphitheater events food sales/fundraising Use external PE doors for outdoor restroom for amphitheater events, or small unisex restrooms outside of covered play courts Indoor & outdoor presentation place w/ability to combing to one large virtual operable door Fitness. climbing wall No mirrors inside bathroom Flooring should be non-slip in wet art lab, locker room, and poss. IA Possible to flip/floor the R/R & T/P but R/R at current location make it accessible to many at wall hrs.

EWA MAKAI MIDDLE SCHOOL PLANNING CHARETTE

Charette 2/Day Four

April 14, 2005 (Tuesday)
Continuation of day one, April 13, 2005

Presentation by the Design Team (see Charette 2-Exhibit 21)

Discussion - Dream School

Students from Ilima Intermediate School were invited to shear their dream school. (see Charette 2-Exhibit 22)

- All enclosed and air conditioned.
- Lockers – need during lunch
- Place to eat outside
- Groupings – 5-12
- Computer Access
- Swimming pool
- Organized Teams
- Clubs (art/Chess)
- Buildings by grade
- Peer counselors
- Counseling – safe place and confidential
- Performance
- Teacher is the friend
- Place where you can express yourself at any time such as Karaoke Machine. Camera documentary
- Game room
- Stove – food/map (run by students)
- Vending machines
- More choices (food)
- Reward system
- Green House
- Rainwater harvesting
- Water slide/pool
- Clean building
- Sound proof room
- Fewer exist – more security
- Parents parking/ bus separate/ staff separate
- Computer for each student (zip disk/student)
- More sports stuff
- Place for lockers
- Easy access to reference
- Store, Supplies to do project
- More chance for PE, scholarship
- Student activity room
- Places to rest – bean bags
- Variety of activities
- Bathrooms
- Pre-packaged foods
- Student contest
- Diving competition

Group Discussion – Suggestions on schematic floor plan (see Charette 2 – Exhibit 23 &26)

Group 1

Suggestions for kitchen

- Have variety available (hot meal, bottled water, salad bar, left over, can juices, sandwich, shakes
- Multiple serving area (counters for hot food, kiosk for quick meals scattered in convenient place)
- Capacity, to have mtgs, in dining room, faculty mtgs, rent to community, use as area for large school events

Suggestions for elective area

- Possible leave home EC as second class in B/C can not compete w/cafeteria
- Industry. Tech needs large are for large construction project
- Band needs access to a parking lot to transport equipment and instruments to concerts
- Non- slip floors in Art & Science where there's sinks ensure adequate drainage for chemical/eye wash areas

Suggestions for Amphitheater

- Student mural
  Prevent skate boarding by using preventable surface
- Gate entry to amphitheater
- No fountain in library

Overall

- Move science room across the open space (swap w/rest. Space)
- Operable walls in resource rooms
- Operable walls in Eng, Math, SS class
- Science T. racks. Ceiling electrical drops
- Laptops for science classes of they can be portable: lab around the room; work tables (acid resistant if possible) in center of room for lectures group work, paper/pencil work, etc.
- Poss. Closet w/lock & key in core classes, science rooms all need storage above labs, not under
- Check w/science teachers for need of gas source at diff. Levels
- Outdoors tool shaeks, kink, house bibs for science/soc. St

EWA MAKAI MIDDLE SCHOOL PLANNING CHARETTE

- Need Storage space for M/T closets
- Drop down screen from ceiling in dining area
- Themed flooring
- Opening for dance class
- Gated at courtyard

Group 2

- Retractable walls to open up CR to each other as well as core commons
- Open up w/retractable walls resource rooms/fsc
- Science rooms - roll up doors or double drs
- Teacher. Station in each CR w/admin date/telephone drop
- TP-1350 sq. ft each – similar to KHS model – Transparence wall
- Acoustically treated DR area to Facilitate large group meetings faculty core mugs
- Switch home EC/and dance rooms
- If amphitheater is not shaded, students will not get optimum use of it during day (possible over hangs)
- Outdoor counseling/socialization area equipped w/picnic tables, part benches w/shade
- Waterfall to be gated/secured w/recyclable water
- Possible water features in each courtyard
- Shaded seating area in courtyard
- Meditation area in courtyard
- Make interior of kitchen visible
- Exterior wall need glass
- Need awning outside of kitchen area
- Serving area outdoors at kitchen & home ecng facilities
- Tweak media center footprint to provide more frontage/window viewing @ kitchen
- Graphics identify
- Main custodial svc center near kitchen
- Exterior restrooms/unisex toilets at near covered play court
- Secure neighborhoods to facilitate rental of commons area
- Move band rooms so they have access to exterior and parking for easy loading/unloading of equipments/instruments for performance
- Move arts & dance to main corridor so classes can be observed by students thru viewing window
- Extend corridors to exit next to locker rooms

Group 3

- Move band to wall near amphitheater- easy access for performance, after hour activity
- Move P.E classroom next to P.E lockers
- Move industrial tech to corner away from lockers
- Hot lunch serving area
- Waiki line several lines?
- Avoid crowding and waiting to play on pay
- Several Kiosk (mini carts) dispersed throughout dining area
- Need storage for tables during special events when dining area needs to be cleared
- Use of facilities for public use
- Need to secure area from entering into pods or any other area During non-lunch for instruction or work time need electrical plays in the floor

EWA MAKAI MIDDLE SCHOOL PLANNING CHARETTE

Charette 2/Day Five

April 15, 2005 (Friday)
Continuation of day one, April 14, 2005

Presentation of schematic floor plan by the Design Team (see Charette 2 Exhibit 27-30)
Comments:

- Operable partition – cont as two
- Rework size of small art room
- Attach small art room next to kiln
- Rework corridor
- Add the PCNC
- Add opening from student center to outside performance
- Combine virtual/media production/student conference
- Push media control and teacher's office up
- Put one general classroom back in elective area

Discussion – what can we shrink?

- General Classroom and resource room can be reduced.
- Bused up to 12 sq. ft.
- Downsize industrial technology to 2000 sq. ft.
- Downsize band/choral to 1440 sq. ft.
- Administration can not be reduced
- Dining and kitchen can be downsized
- Medial center can be downsized
- Need one bigger storage near custodian

Discussion – Character of "Ewa Makai Middle School"

- Feeling of safety
- Feeling of oneness
- Should not look like a performing
- Feeling for performing arts
- Lots of trees
- Sun light come in
- Stage lighting
- Built in seating

EXHIBIT - NOTES TAKEN DURING CHARETTE TWO

Eng./S Studies

- Elevated, Performance Areas (Music) - Rock, Pk/Dance
- Balcony/Loft Area (performances) - Studio space
- Large Space - Project areas
- Flexible groupings 1/3, 1/3, 1/3 - Physical environments support to (large group/small group/independent study) S.S. Long integrated proje.
- Storage Space - for student projects
- Display areas for student work
- Writing Process Library → Newsroom, Publishing
- Personal Space - Physical Features
- Comfortable reading areas - Library Setting - Window/built in for books, can also be conferencing/private rdg. area.
- Glass, Daylight - need for storage

Tony Eulbie Annette

Gudge, Mike, Marvin, John

Recording Studio Visual/Audio Next to Band/Chorus

Students created in school - DVDs CDs

Year Book

Marketing products - (process) licensing etc distribution etc.

Final product being utilized by Public

Partnerships w/ Knowledgeable personnel

Access of Spaces (resource rooms) & Conference Rms.

School Promotion over web including partnerships/community

Recycling Cntr Open to Public (community)

Run as a business - self sustaining

Business/Technology

Math

- white board space
- Group tables (flexibility in furniture)
- Measurement indicators throughout classroom (feet, volume, area etc.) metric. conversion chart
- Projection screen (built-in) to display concepts/formula
- Solar pump - water column

Science: 6th Physical, 7th Biology, 8th Earth Space

- movable lab tables
- rain water catchment
- "special" trash receptacles
- technological capabilities
- outdoor sinks/accessibility
- built in aquarium/terrarium (walls displays) w/filtration system
- built in science refrigerator
- high ceilings (physical science)
- micro-Elmoscope
- Sky lights (experiments)

EXHIBIT - NOTES TAKEN DURING CHARETTE TWO

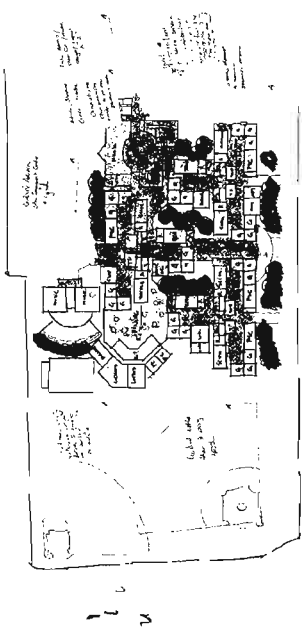

SITE PLAN - ALTERNATE A
EWA MAKAI MIDDLE SCHOOL

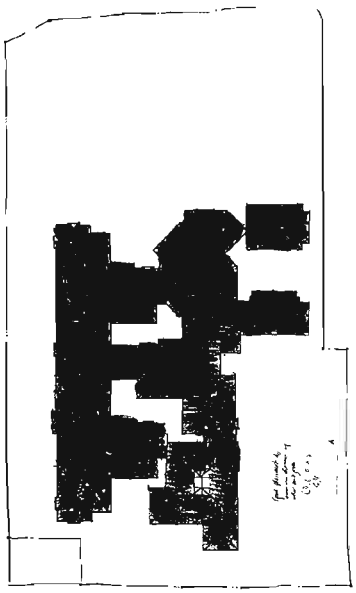

EXHIBIT - NOTES TAKEN DURING CHARETTE TWO

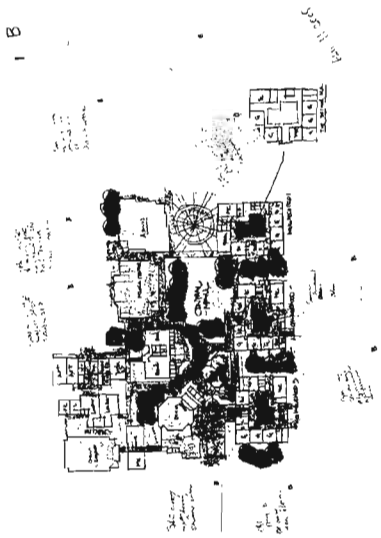

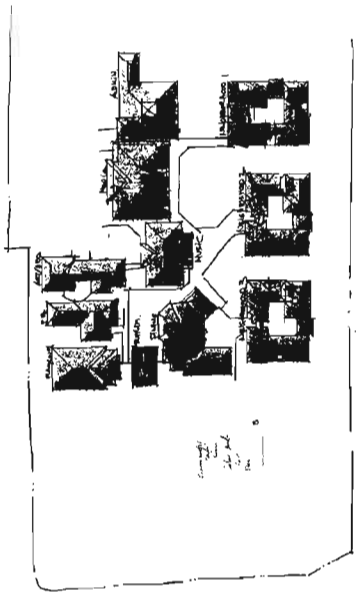

EXHIBIT - NOTES TAKEN DURING CHARETTE TWO

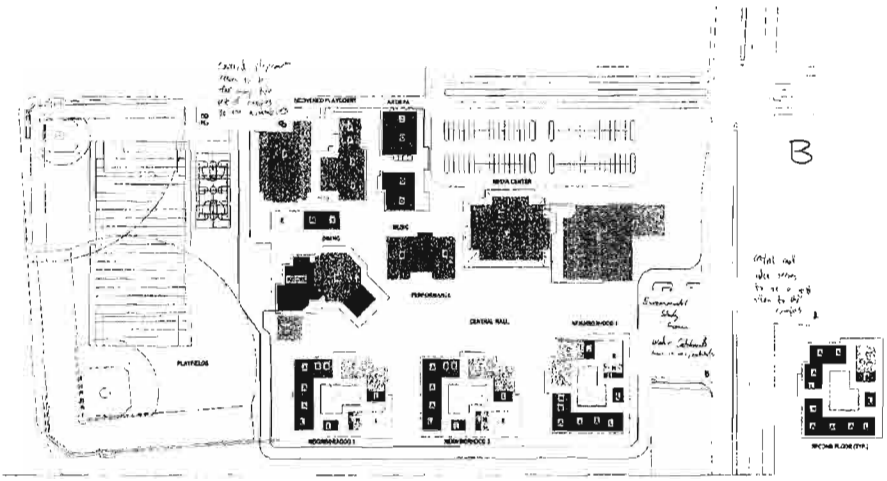

- A GENERAL CLASSROOM (27)
- B RESOURCE CLASSROOM (9)
- C SCIENCE CLASSROOM (9)
- D ART/BPA CLASSROOM (3)
- E SPECIAL ED FSC (4)
- F PE LOCKER/SHOWERS (2)
- G MUSIC (2)
- H TEACHER PLANNING
- I ADMINISTRATION/STUDENT SUPPORT
- J MEDIA CENTER
- K DINING/FORUM
- L SUPPORT
- N VISUALIZATION CLASSROOM (1)
- N SUPPLEMENTAL CLASSROOM (5)

SITE PLAN - ALTERNATE B
EWA MAKAI MIDDLE SCHOOL

EXHIBIT - NOTES TAKEN DURING CHARETTE TWO

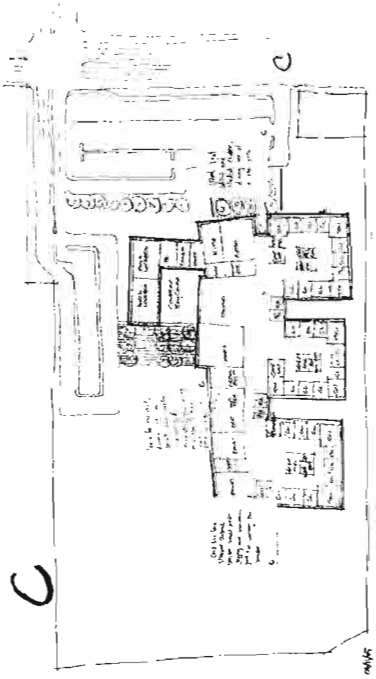

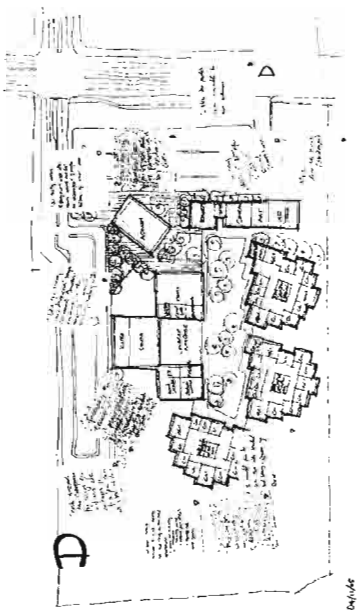

EXHIBIT - NOTES TAKEN DURING CHARETTE TWO

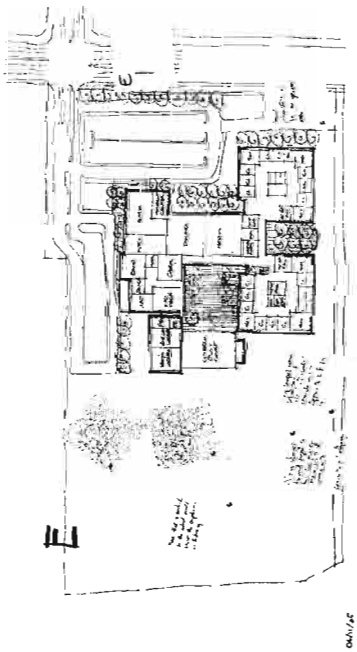

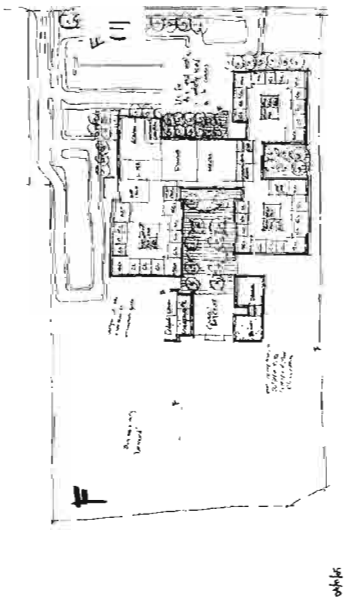

EXHIBIT - NOTES TAKEN DURING CHARETTE TWO

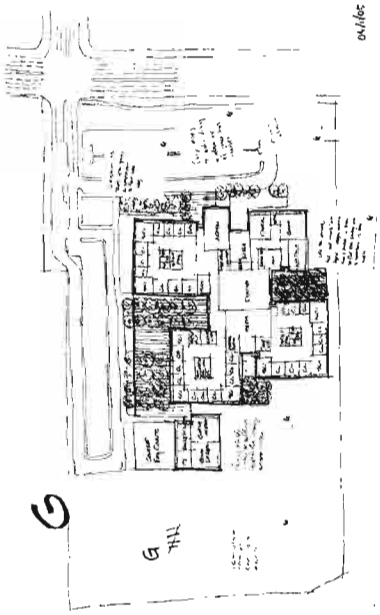

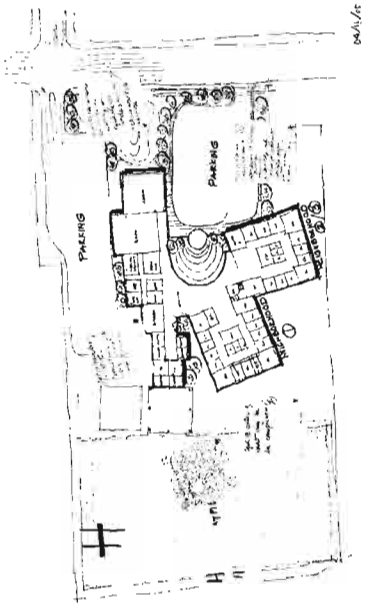

EXHIBIT - NOTES TAKEN DURING CHARETTE TWO

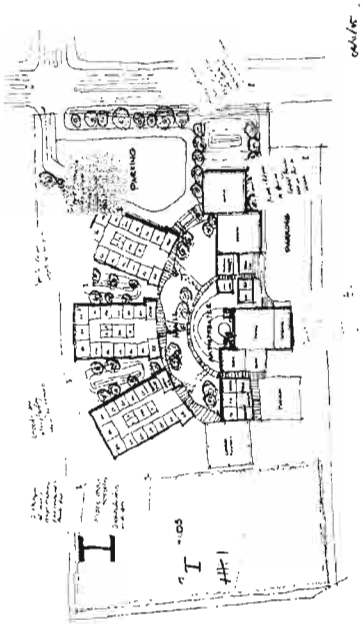

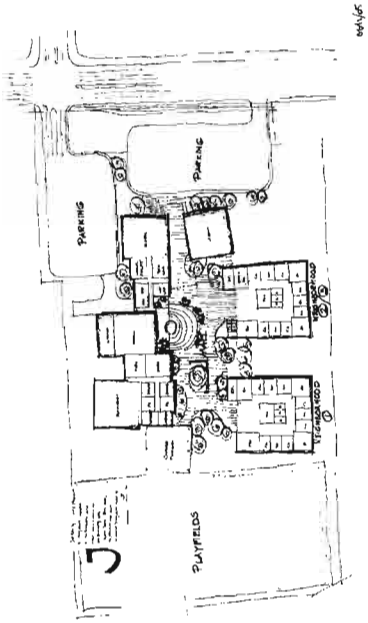

EXHIBIT - NOTES TAKEN DURING CHARETTE TWO

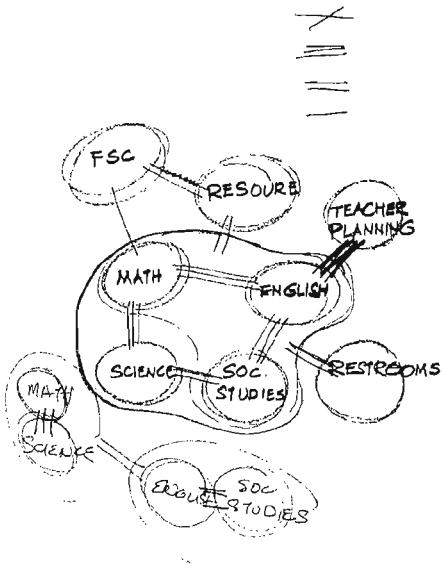

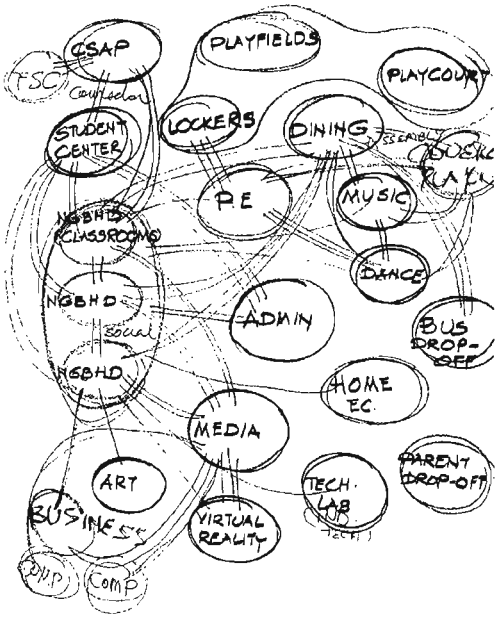

EXHIBIT - NOTES TAKEN DURING CHARETTE TWO

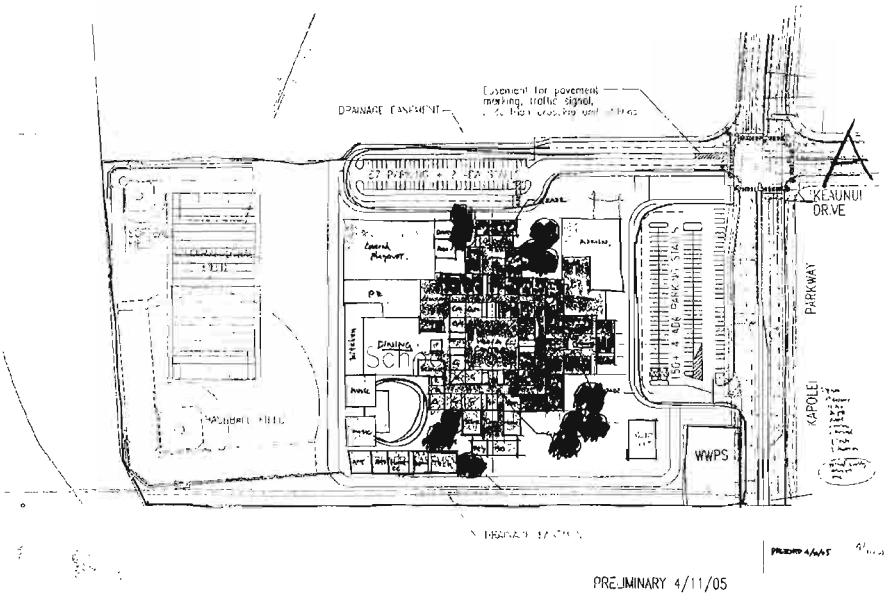

EXHIBIT - NOTES TAKEN DURING CHARETTE TWO

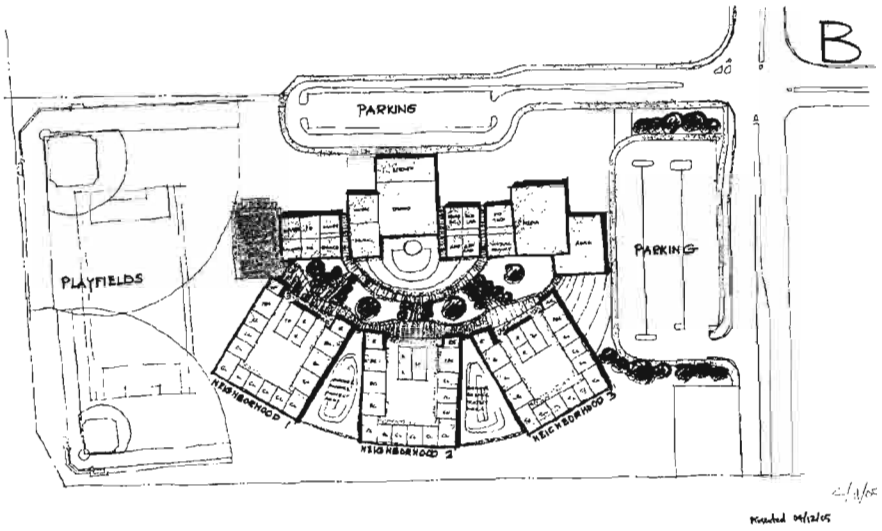

EXHIBIT - NOTES TAKEN DURING CHARETTE TWO

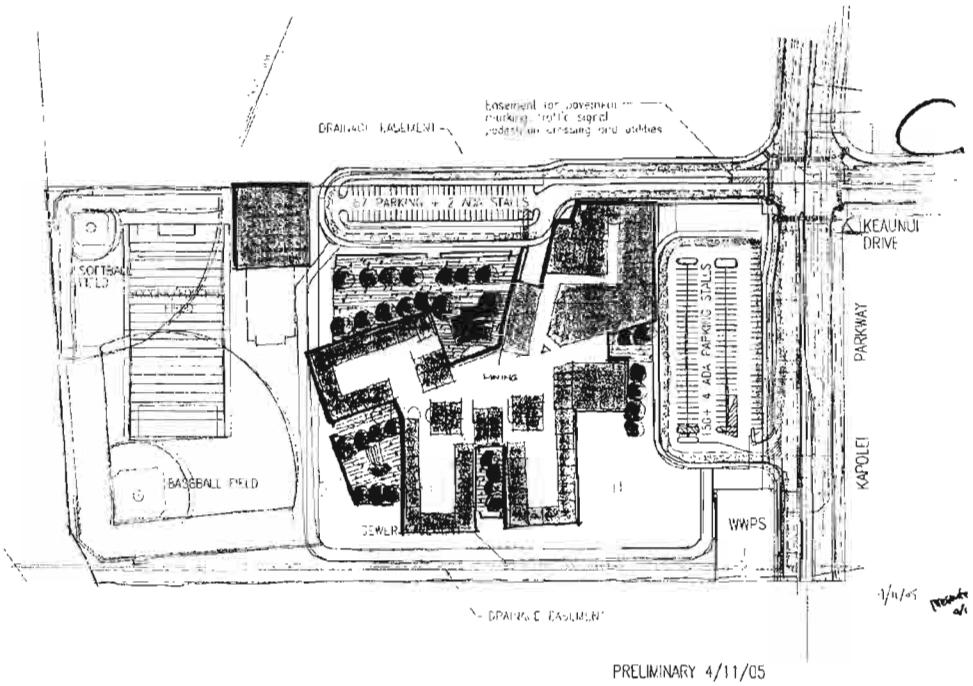

EXHIBIT - NOTES TAKEN DURING CHARETTE TWO

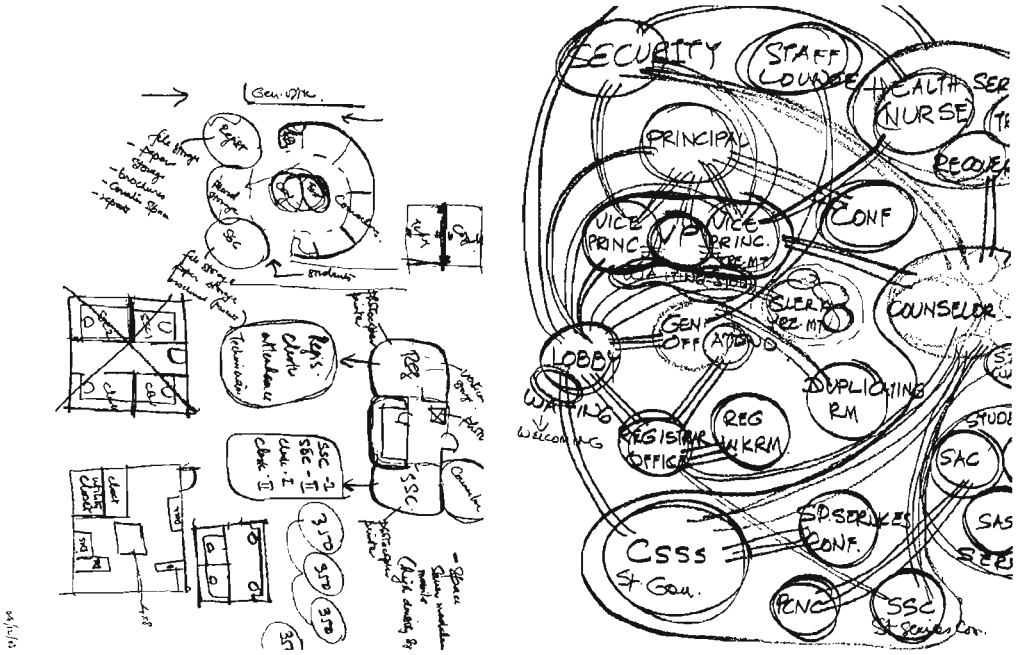

EXHIBIT - NOTES TAKEN DURING CHARETTE TWO

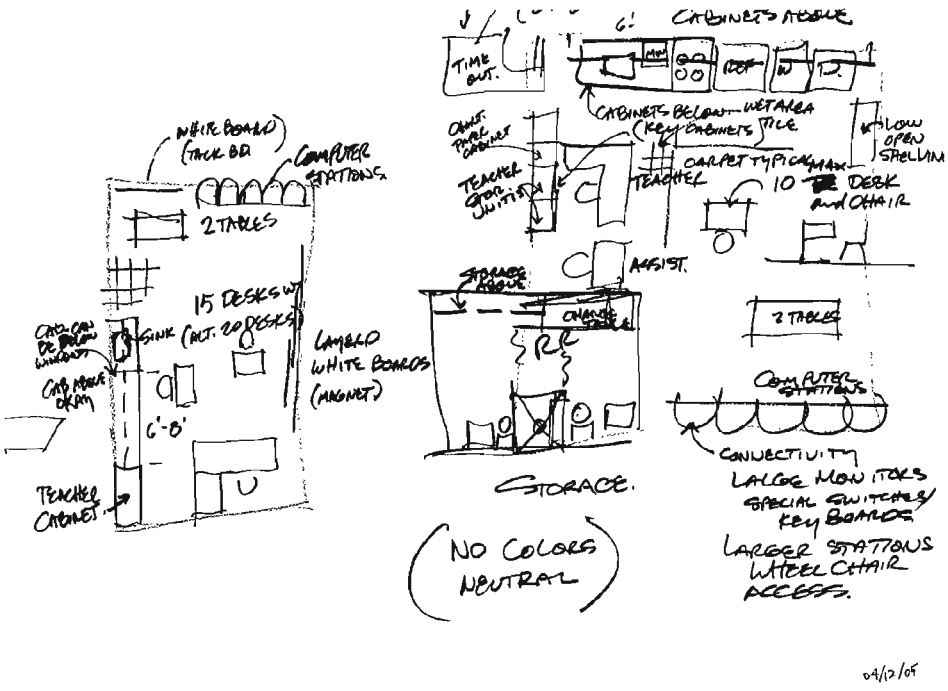

EXHIBIT - NOTES TAKEN DURING CHARETTE TWO

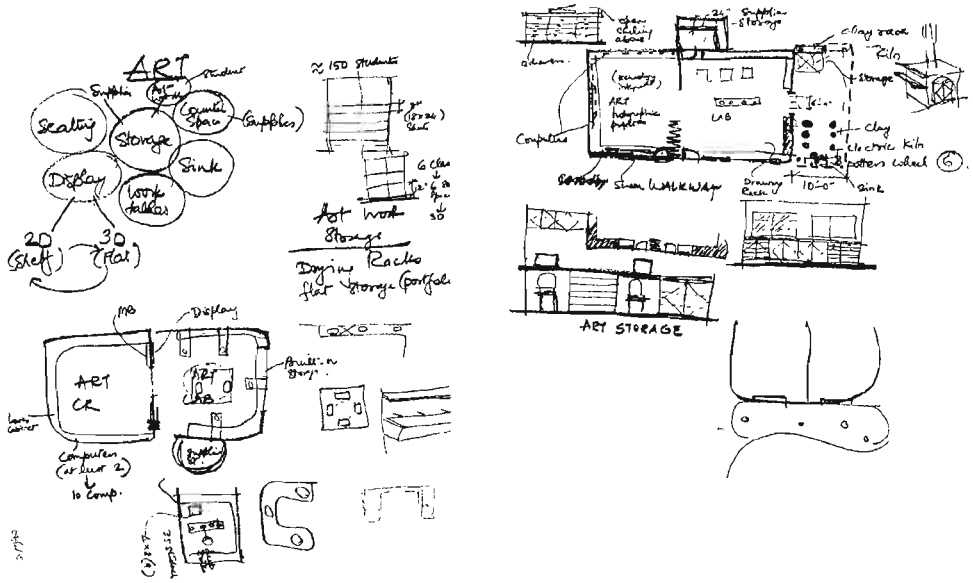

EXHIBIT - NOTES TAKEN DURING CHARETTE TWO

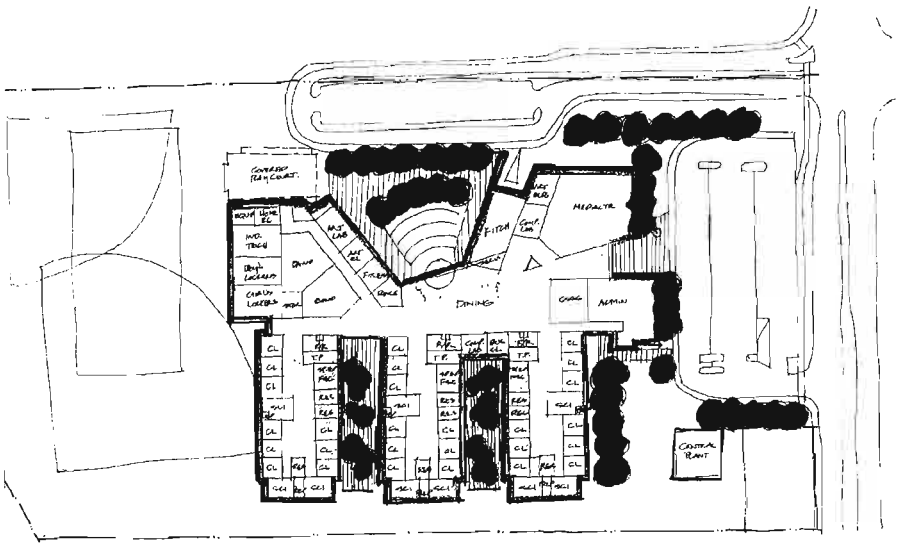

04/13/15

EXHIBIT - NOTES TAKEN DURING CHARETTE TWO

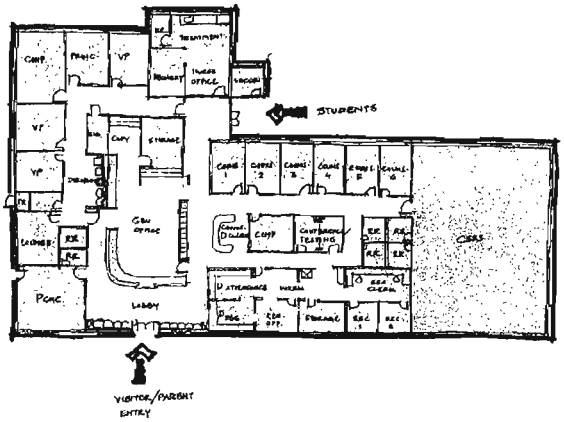

ADMINISTRATION

04/13/05

EXHIBIT - NOTES TAKEN DURING CHARETTE TWO

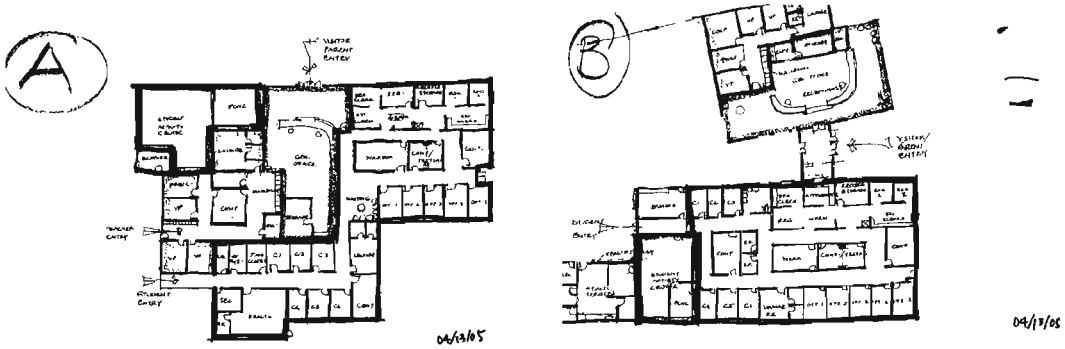

EXHIBIT - NOTES TAKEN DURING CHARETTE TWO

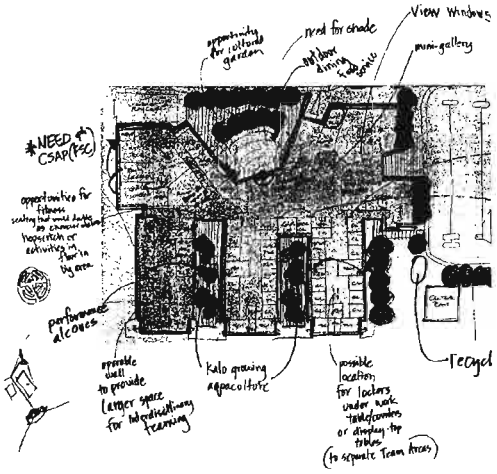

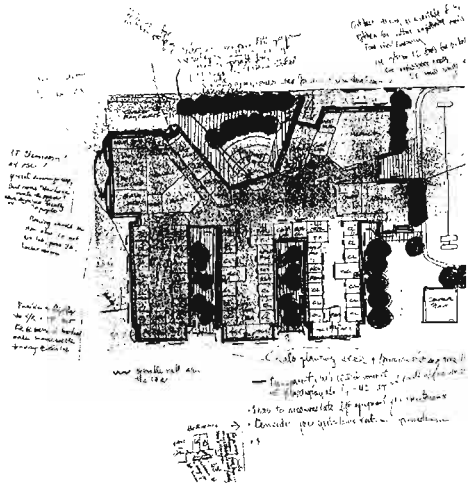

EXHIBIT - NOTES TAKEN DURING CHARETTE TWO

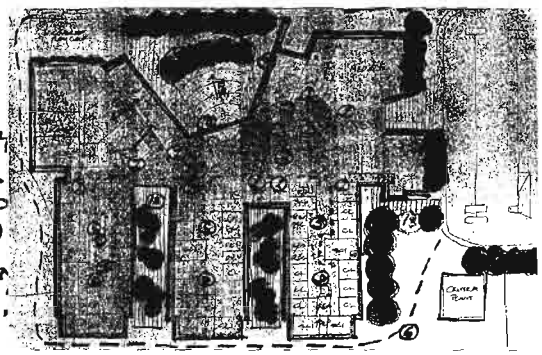

1. Large windows/glass walls for visual observance.
2. Information kiosk w/ interacti screens, directional signage (school location in relation to world, island, school facilities) way finding arrows.
3. Student info/activities/displa wall w/ electronic marquee,
4. Mural wall for student art (grade-level)
5. Incorporate physical fitness apparatus
6. Fire access lane - use for physical fitness track.
7. World map
8. Indoor walking track
9. Presentation area w/ sunken seating (eg for poetry reading)
10. built in seating or benches throughout
11. Taro center loi
12. Recycling center?
13. planters for herbs/aromatherapy throughout.

EXHIBIT - NOTES TAKEN DURING CHARETTE TWO

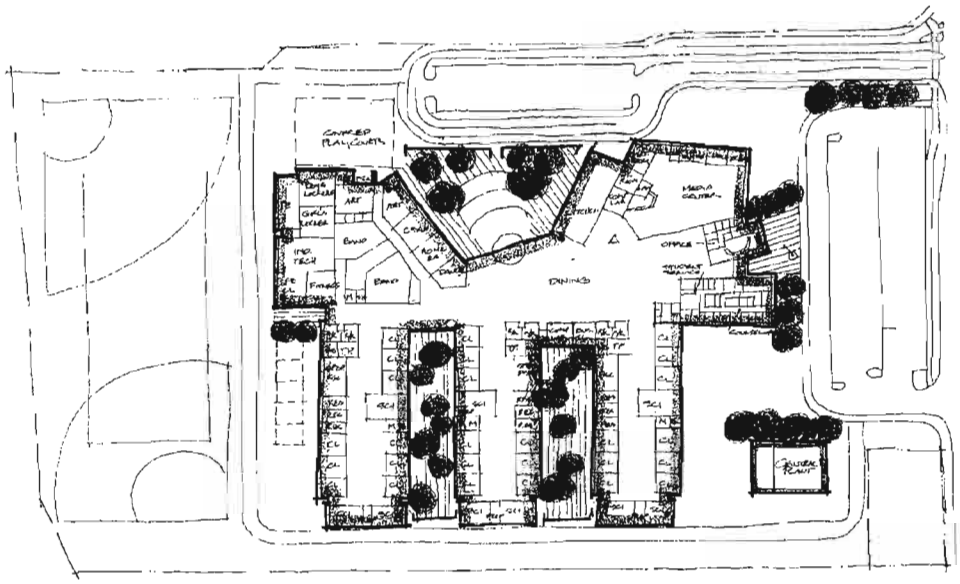

04/14/05

EXHIBIT - NOTES TAKEN DURING CHARETTE TWO

- AREAS FOR PAINTING/KARDKE (SELF EXPRESSION)
- GAME RM
- CAMERAS - FRIENDS PICTURES
- STORE - FOOD/MAPS (RUN BY STUDENTS)
- VENDING MACHINES
- MORE CHOICES (FOOD)
- REWARD SYSTEM
- GREENHOUSE
- RAINWATER HARVESTING
- WATER SLIDE / POOL
- CLEAN BLDG
- SOUND PROOF RM
- FEWER EXITS
- PARENT/BUS DROP OFF SEPARATED STAFF PARKING

- COMPUTER FOR EACH STUDENT (ZIP DISK/STUDENT)
- SPORTS, LOCKERS, [illegible] BKS, STORE ([illegible]), (DANCE/[illegible]), SCHOLARSHIPS (ACTIVITIES) [illegible] (CLEAN BAGS) VARIETY OF ACTIVITIES, BALANCING, [illegible] DIVING COMPETITION
- INTERACTIVE / HANDS ON [illegible] PLAYING (BY [illegible])
- LONGER RECESS ?
- [illegible]
- 'HOME LIKE'. COMFORTABLE

- ENCLOSED - A/C
- LOCKERS
- OUTDOOR DINING
- GROUPS - 5-12
- OUTDOOR/INDOOR READING AREA
- COMPUTER ACCESS
- SWIMMING POOL
- ORGANIZED TEAMS
- CLUBS (ART, CHESS)
- BUILDINGS BY GRADE
- PEER COUNSELORS - CONFIDENTIALITY
- PERFORMANCE AREAS
- BETTER EDUCATION / TEACHERS

EXHIBIT - NOTES TAKEN DURING CHARETTE TWO

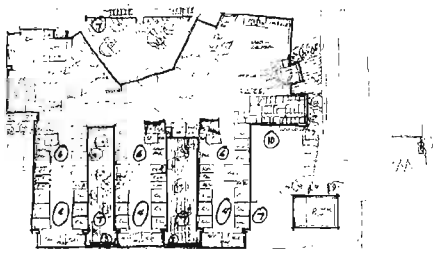

① Operable walls should be of high quality for constant use / noise reduction
② Walls between core classrooms should be operable for larger classroom settings.
" " Spec Resources " " more flexibility in class sizes.
③ There should be a janitor room in each pod.
④ Presentations should have electrical outlets in floors for microphones, etc. Overhead lighting for student "self expression" or class lessons.
⑤ Teacher planning/lounges should be larger
⑥ Small Seating areas that have computer kiosks for student use. Individually or small grp
⑦ A have tables & benches for outdoor dining areas and seating areas for reading / quiet time
a. outdoor science papers
⑧ Fixed wall so that outsiders are not able to get in. Enabling better after hours security which gives a capability for ponds, waterfalls, etc.
⑨ Needs lots of room for bike racks. Highly visible to deter thefts.
⑩ Lanai area for outdoor counseling sessions. Covered / shaded areas. Waiting area.

① Retractable walls to open up CR to each other as well as core commons.
② Open up w/ retractable walls resource rooms / FSC
③ Science Rooms - Roll ~~out~~ up Doors or Double d
④ Tchr. Station in each CR w/ admin/data / telephone drop

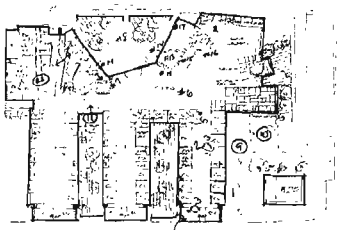

⑤ TP - 1350 sq. ft each - similar to KHS Model - Transparent walls.
⑥ Acoustically treated DR area to facilitate large group meetings / ie. faculty / all core mtgs.
⑦ Switch Home Ec / and Dance rooms
⑧ If amphitheatre is not shaded, students will not get optimum use of it during day. (possible overhangs)

EXHIBIT - NOTES TAKEN DURING CHARETTE TWO

⑨ Enclose area to create courtyard for 1st pod / neighborhood
⑩ Outdoor ~~[illegible]~~ counseling / socialization area equipped w/ picnic tables, park benches - w/ shade.
⑪ Waterfall feature (to be gated / secured) - w/ recyclable water
⑫ Outdoor court areas -
- possible water features in each (waterface, koi pond, loi)
- Shaded Seating areas - benches,
- Meditation area - rock garden

#13 - Make interior of kitchen visible - exterior walls - glass put awnings outside of kitchen area
#14 • Serving area outdoors (serving windows) at kitchen & home ec.
#15 • Graphics (ie. neon signs), banners) identifying facilities, neighborhoods.
#16 • Tweak media center footprint to provide more frontage / window viewing @ kitchen
#17. Main custodial svc center near kitchen
#18. Exterior restrooms / unisex toilets near cov'd playcourt
#19. Secure neighborhoods (rollup storefront or swinging drs/gates) to facilitate rental of commons area.

20. ~~Have~~ move bandrooms so they have access to exterior & parking for easy loading / [illegible] of equipt / instruments for performances.
21. Move arts & dance to main corridor so classes can be observed by students thru viewing [illegible]
22. Extend corridor to exit road to locker [illegible]

EXHIBIT - NOTES TAKEN DURING CHARETTE TWO

- Gate entry to amphitheatre.
- Prevent skate boarding by using preventable surface

No water fountain in the library.

Drop-down screens from ceiling in dining area.

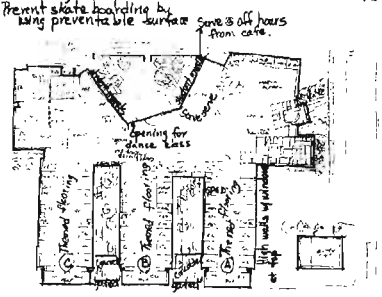

Need storage space for M/T closets

Suggestions:

1. Move (A) Science room across the open space (Swap w/ Res. space)
2. Operable walls in resource rooms
3. Operable walls in Eng, Math, SS classes
4. Sci. T. recc. ceiling electrical drops
5. Lap tops for science classes so they can be portable; lab around the room; worktables (acid resistant if possible) in center of room for lectures, group work, paper/pencil work, etc.
6. Poss. closet w/ lock + Key in core classes; Science rooms all need storage above labs, not under.
7. Check w/ science teachers for need of gas source at diff. levels
8. Outdoor tool shacks, sink, hose bibs for science/soc. st.

Suggestions for Kitchen.

1. Have variety available daily
   - hot meal
   - left over
   - sandwich
   - bottled water
   - can juices
   - shakes
   - salad bar
2. Multiple serving areas -
   - counters for hot food
   - kiosks for quick meals scattered in convenient place
3. Capacity to have mtgs. in dining rms; i.e. faculty mtgs., rent to community; use as area for large school events.

Suggestions for elective area

1. Possibly leave Home Ec as second class in b/c cannot compete w/ cafeteria
2. Indust. Tech needs large are for large construction proj.
3. Band needs access to a parking lot to transport equip mt. and instruments to concerts.
4. Non-slip floors in Art & Science where there's sinks
   Ensure adequate drainage for chemical/eye wash areas

EXHIBIT - NOTES TAKEN DURING CHARETTE TWO

Dining Comments

- Hot lunch serving area =
- Wiki Line (ie cheeseburger, saimin, pizza) Several lines?

Lessen congestion — Solve concern:
Avoid crowding and waiting to plop or pay
(suggest: spreading out play and pay areas.)
Suggestion: several kiosk (mini carts) dispersed throughout Dining Area

Concern: cleanliness, safety, of Dining room
ie. spills, rubbish, slippery floors, etc...

?? Storage for tables during special events?
when Dining Area needs to be cleared

?? Use of facilities for public use?
* Need to secure Area — from entering into pods or any other areas

- During non-lunch — for instruction or work time need
  * Airport Hubs needed Electrical Plans in the [illegible]

Electives Corner

- move band to wall near ampitheater
  - easy access for performance, after-hour activity
- Move P.E. classroom next to PE lockers
  Fitness
- Move industrial tech to corner away from lockers.

EXHIBIT - NOTES TAKEN DURING CHARETTE TWO

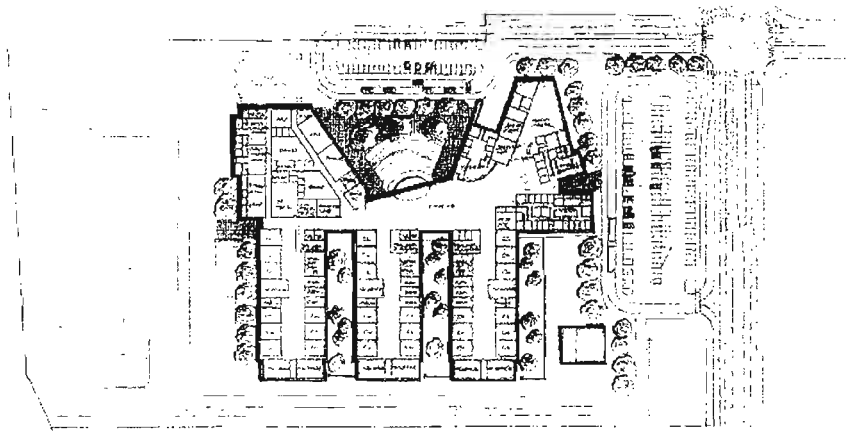

CONCEPT DEVELOPMENT

EWA MAKAI MIDDLE SCHOOL

OAHU HAWAII

APRIL 2006

EXHIBIT - NOTES TAKEN DURING CHARETTE TWO

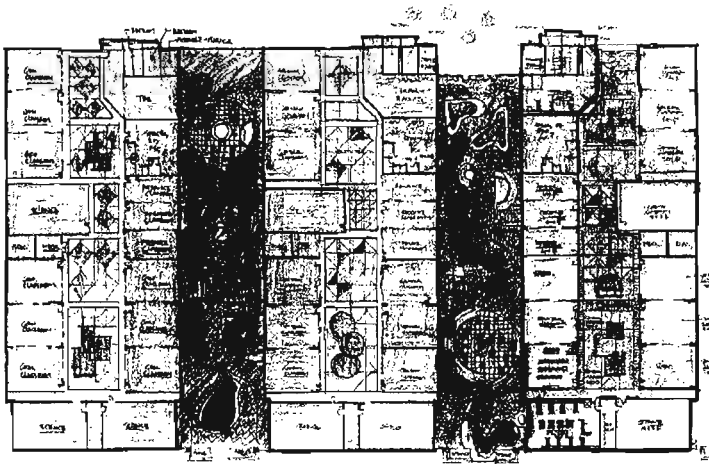

CONCEPT DEVELOPMENT

EWA MAKAI MIDDLE SCHOOL

OAHU HAWAII

APRIL 2005

EXHIBIT - NOTES TAKEN DURING CHARETTE TWO

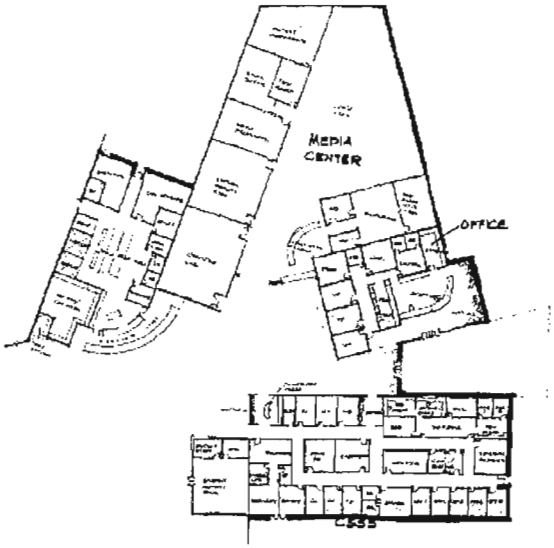

CONCEPT EWA MAKAI MIDDLE SCHOOL APRIL 2005

DEVELOPMENT OAHU HAWAII

EXHIBIT - NOTES TAKEN DURING CHARETTE TWO

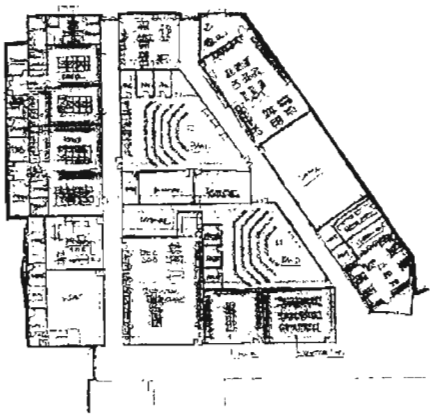

CONCEPT EWA MAKAI MIDDLE SCHOOL APRIL 2005

DEVELOPMENT OAHU HAWAII

EWA MAKAI MIDDLE SCHOOL PLANNING CHARETTE

Charette 3/Day One

May 9, 2005 (Monday)
Continuation of Charette 2

Presentation by The Design Team
(see Charette 3 – Exhibit 1)

- Middle wing – switch science to right side
- Possible partition at sing
- Place mirror at inside wall
- Check code for fixture contour
- Windows from science classroom into common area middle exit at wall
- Add storage.
- Provide storage at library right side
- 3 pallets on floor
- add more storage at custodial center
- revise workroom ad CSSS move wall so that workroom can be divided
- virtual reality room – flush doors – no window
- no need secured storage in workroom – make testing room bigger with rook counters
- overhead cabinets above files at register and work counter below
- need one copier for register
- push counselors to left and make one waiting beiger at register
- add exist our from counseling to main dining
- move safety officer to mechanical room
- discussion on location of health room
- art classroom – project out in room
- art classroom – make two storage rooms out of room shown on plan
- kiln room accessible from both rooms
- space about 5 wheels
- need long storage room
- switch dance w/ art
- kiln with outside covered wall
- add a teacher restroom at specialty wing
- flip flop restroom with equipment storage at covered play court
- flip autodial with dry storage and corridor out at kitchen

Mamo's general comments

- lots of area for student
- different themes in learning gardens
- space for back packs
- lawks downs blinds on windows accommodations concern with enough ever lighting
- smelly dumpster near service cafeteria
- dumpster near play court

EWA MAKAI MIDDLE SCHOOL PLANNING CHARETTE

Charette 3/Day Two

May 10, 2005 (Tuesday)
Continuation of May 9, 2005

Presentation by The Design Team (see Charette 3 - Exhibit 2)
Comments:

- Add gate
- Revise door to make more secure
- Redo teacher's workroom
- Qualifying statement – note – relationships only furniture shown for scale only
- No island in science lab
- Science – flexibility of use – work tables only
- Storage for dining area
- Gates at PE lockers area
- Break in counter at lobby of admin
- Security is important
- Community

Mamo – 3 area

- Student achievement
- Safety and security
- Middle school
- Community
- Ways to experience adult world
- Mall like invitation
- Inside like a gallery
- "Heart of the School is amphitheater"

EWA MAKAI MIDDLE SCHOOL PLANNING CHARETTE

Charette 3/Day Three
May 11, 2005 (Wednesday)
Continuation of May 10, 2005

Welcome – Tony Chun
Nick Nichols, Department of Education – Facilities Branch
- Thanked the Steering Committee and all representative to participate the final day of Charette
- The quality of Ewa Makai Middle School has been developed so well in Charette meeting
- Introduced Paul Winslow as Facilitator

Paul Winslow, The Orcutt/Winslow partnership
- Introduction of The Orcutt/Winslow
- Thanked the Steering Committee for participating Charette meeting and exploring their ideas.

Steven Wong, Mitsunaga & Associates, Inc. – Presentation about the site (see Charette 3-Exhibit 3)
- Still in process to develop
- Trade winds from Northeast
- Bus – right turn only
- Heart of School is amphitheater
- Student's drop off is located at amphitheater
- Mechanical building will be educational building
- Created dynamic feeling and secure feeling for students and teachers

Caroline Lobo, the Ocutt/Winslow, reviewed how we got single building
- Scheme A: students break up into 3 small size group gives more interaction among students and teachers
  Media is center of school
  Theater intergrades with arts & Performance
  Smaller Learning community bout one big building
- Scheme B: Outdoor and Indoor Concept
  As walking in, more secure space in bulling
  Create Court yard at center in single building
  Nationhood concept as Scheme A
  Between neighborhood, courtyard exist
- Scheme C: no outdoor and courtyard
  More space in building
  Amphitheater at center

Paul Winslow, the Ocutt/Winslow, reviewed how we got 3 schemes to final design.
- Students from Ilima Intermediate School want to stay in building
- Want to hang out at same place

EWA MAKAI MIDDLE SCHOOL PLANNING CHARETTE

The Steering Committee members presented final design. (See conceptual drawings included in this report – pages 24 – 35)
Marvine Yonamine, The Steering Committee Member (see Charette 3-Exhibit 4)
- Classroom Cluster – 3 wings
  - 3 wings for multi-track
  - by grade
  - "School in School" concept
    Small teaching class (English, match & science) X teaching team
  - One wing has 3 teaching team
  - Special education exist center to involve Neighborhood classrooms
    Restrooms are located at front due to security to be monitored
  - Provided portable partition for teaching team and to make small classroom bigger as educational space
  - Flexible

Debbie Nakamoto, The Steering Committee Member (see Charette 3-Exhibit 5)
- Administration Building
  - Administration is "Head of School"
  - Let the public enter straight to the general office
  - Convenient for parents
  - CSSS close to Administration
  - Security can view Student Center
  - Principal can view Student Center
  - Health Room is located at the entrance to provide easy access for students and emergency
  - Idea of location for Media center is "not hidden space" and "accessible"
  - Computer lab is "Box Theater" where can be used for anything in feature
  - Computer lab has projection in whole room
  - The concept of cafeteria is "Shopping Mole"
  - Cafeteria has center space for activity, students' display
  - Cafeteria is "Student focused space"

Una Chan, The Steering Committee Member (see Charette 3-Exhibit 6)
- Arts & Performing
  - Home economics room is "Small Shop" where students can sale things
  - Fitness area provides elective class, flexibility, and opportunities to students

Randy Ibarra, The Steering Committee Member (see Charette 3-Exhibit 7)
- Overall Floor Plan
  - Thought of restroom in neighborhood a lot
  - Concerned landscape for maintenance
  - Round table for maintenance
  - Practicality
  - Easy maintenance

EWA MAKAI MIDDLE SCHOOL PLANNING CHARETTE

Jonelle Ohiro, Jonelle Oshiro Landscape Architect

- Landscape
  - Function overall cominuty
  - Intergrades culture detail in landscape
  - Created a lot of shade
  - Provide school name and log to identify at entrance
  - Theater as "heart of school"
  - Image of theater is "sailing"
  - Used blue to provide cooling and comfort
  - Provide each different theme in each courtyard between classroom wings
  - Theme are "Space", "earth", and "culture"
  - Provided Upper forest theme and middle forest theme to teach culture such as how banana grows
  - Provide a gate at each courtyard between classroom wing to make secure (Paul Winslow)

Caroline Lobo, The Ocutte/Winslow Partnership

- Overall Final Design
  - Concerned existing site
  - Water efficiency
  - Limited energy use
  - Provide natural day light to all classroom for student learning effectively
  - Provide cooler space for students
  - Use proper material to create best quality of indoor environment

Question and Answers

- "Solar Components in school?"
  - use local utility such as solar pumps etc. but need to working on that with mechanical engineer.
  - Practically, initial cost is little bit higher.
  - Not really economical
- "Is there A/C? Is there A/C that cost 50% less"
  - Might exist. We are searching.
  - Might be control system
- "Capacity of theater?"

  Not found actual number of seats yet, but enough space for 200 or 300 seating

Comments from The Steering Committee members

- All Ideas of Ewa Makai Middle school is for children, teacher, community member, parents, and students.
- Ewa Makai Middle School will provide opportunities to learn and give perfect environment for students want to stay
- Ewa Maki Middle School will definitely be "Incredible School"
- Thanks to the design team

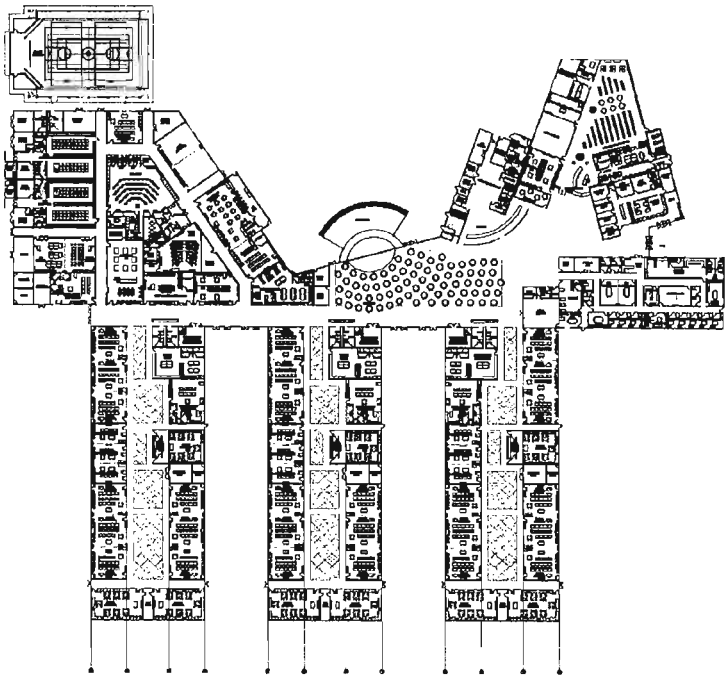

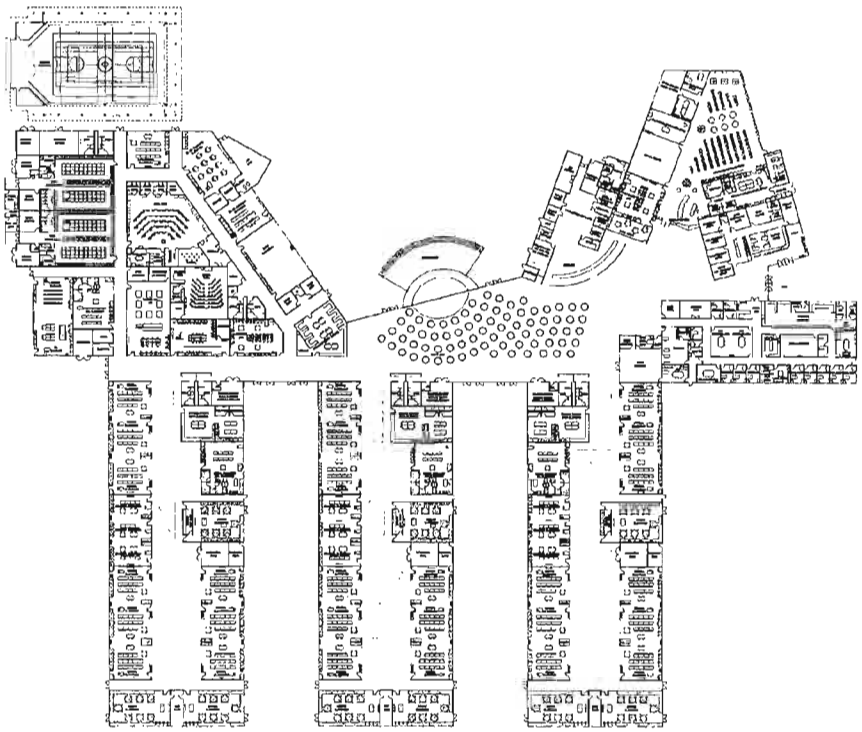

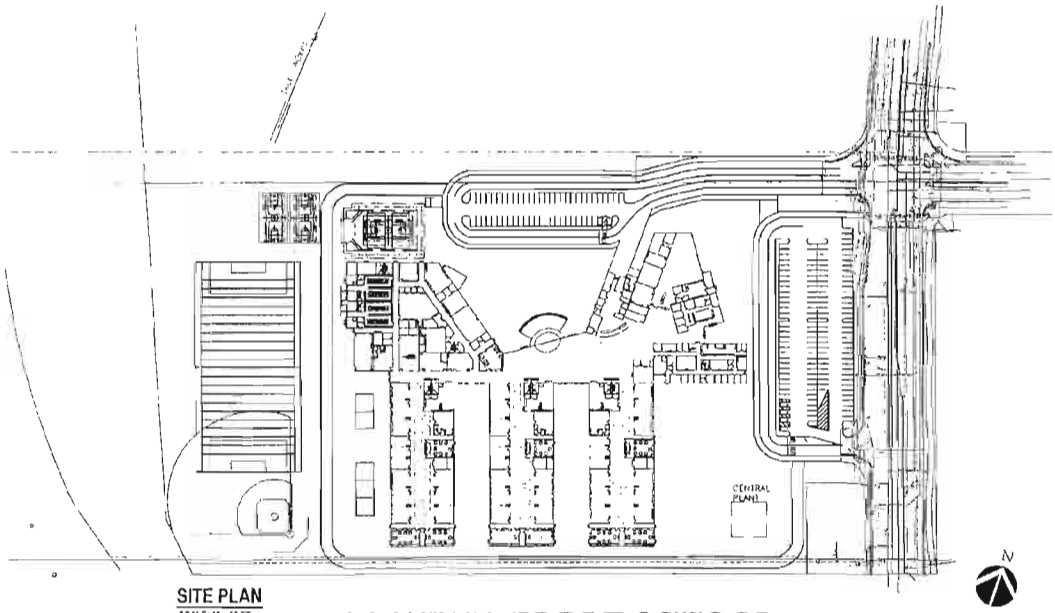

SITE PLAN
SCALE: 1" = 50 FT.

CONCEPT
DEVELOPMENT

EWA MAKAI MIDDLE SCHOOL

OAHU HAWAII

MAY 2005 - CHARETTE THREE

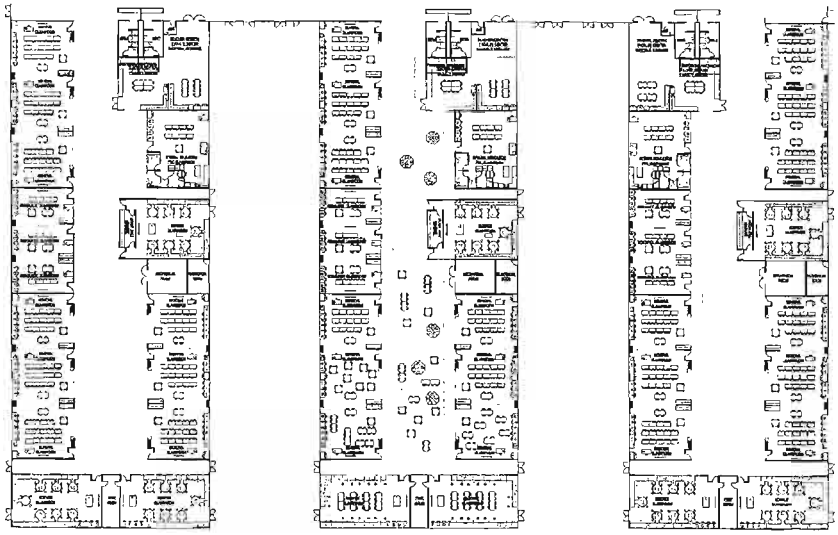

CONCEPT **EWA MAKAI MIDDLE SCHOOL** MAY 2005 - CHARETTE THREE

DEVELOPMENT OAHU HAWAII

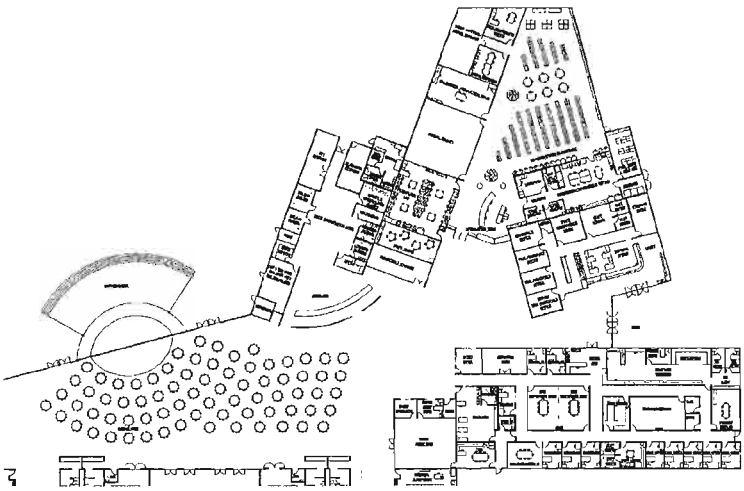

CONCEPT **EWA MAKAI MIDDLE SCHOOL** MAY 2005 - CHARETTE THREE

DEVELOPMENT OAHU HAWAII

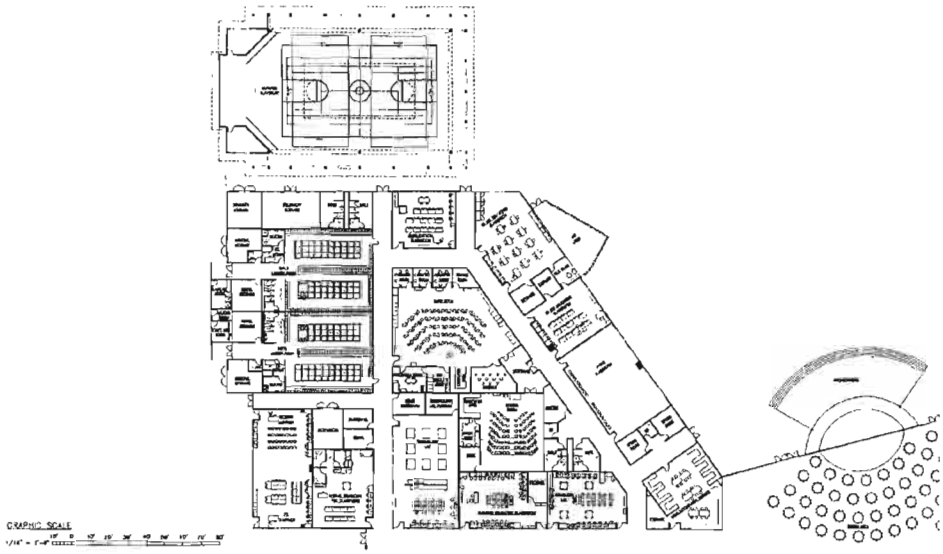

CONCEPT

EWA MAKAI MIDDLE SCHOOL

MAY 2005 - CHARETTE THREE

DEVELOPMENT OAHU HAWAII

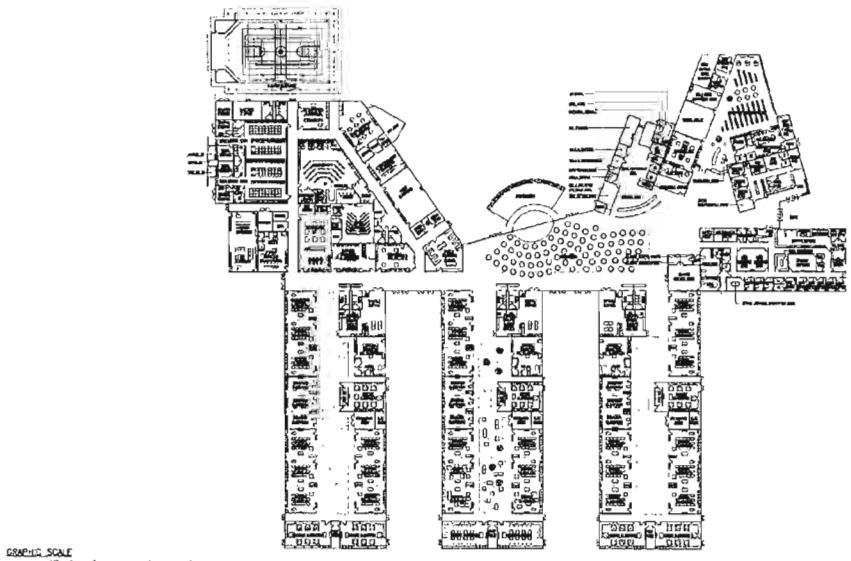

CONCEPT

EWA MAKAI MIDDLE SCHOOL

MAY 2005 CHARETTE THREE

DEVELOPMENT OAHU HAWAII

AGENCY CORRESPONDENCE

Mitsunaga & Associates, Inc
747 Amana Street Suite 216
Honolulu, Hawaii 96814
Ph (808) 945-7882
Fax. (808) 946-2563
E-Mail: mitsunaga003@hawaii.rr.com

June 17, 2005

Mr. Tim Hiu
Department of Planning & Permitting
Building Division
650 S. King St. 12th. Floor
Honolulu, Hawaii 96813

Subject: Ewa Makai Middle School

Dear Mr. Hiu:
Thank you very much for your review of our conceptual plans for the new Ewa Makai Middle School. We requested this review since this is a very innovative one building school. The Department of Education currently does not have a school of this type or magnitude, which is all under one roof. Per our meeting, the following were your preliminary review comments and suggestions on the plans that were presented.

1. The code that the building will be reviewed under will be the 2003 International Building Code since this code allows much more "leniency" in the design than the 1997 Uniform Building Code. You indicated that the 2003 code will be adopted soon by the City and County of Honolulu. Although not currently adopted, Architects may currently request that their plans be reviewed under this code.

2. The building is currently has about 193,000 s.f. under roof. You suggested that the Type of Construction that this will fall under will be a Type II –B, Unlimited. In effect, this means that this building may have unlimited area and be unprotected if certain conditions are met. These conditions would be under Section 507.8 which are:
   - The building is fully sprinklered and one story.
   - The building has the required number of exits out of the classrooms.

3. The building can be considered as be one occupancy which is an E occupancy. There will not be mixed occupancies since the 2003 code allows this building to be an educational building.

4. The Choral Room shows only one exit out and there will need to be two exits.

5. The electives wing will need a one hour exit corridor. Fire rated doors will need to be placed at the end of the corridors. These doors could be magnetic hold-open type.

6. Additional exits out from the Dance Classroom will be required.

7. The structural roof members at the Dining commons were placed at 25 ft. clear to allow the structural members to be un-protected per the 1997 UBC. You indicated that since this building will now be reviewed under the 2003 IBC, the entire building is un-protected and therefore, the 25 ft. limitation need not apply. The roof plate height can be dropped.

8. The classrooms at the Neighborhood commons are designed to open up to the common area with operable partitions. You indicated that this will be allowed and the commons will not be considered a one hour corridor and the operable partitions need not be fire rated. However, additional exits out from the classrooms to the outside gardens will need to be provided.

9. You noted that under the 2003 IBC, the diagonal distance required between exit doors is 1/3 the distance rather than the old ½ minimum distance under the 1997 code.

10. Fire sprinkling will be required under the tent structure and the tent structure needs to be made with fire retardant material.

As a final comment, you indicated that the design can proceed under this concept. A set of plans was left with you and you indicated that a copy of this letter will be placed in the project file as future reference for this project.

Finally, thank you very much for your time and assistance.

Sincerely,
Mitsunaga & Associates, Inc.

Steven D. Wong A.I.A.
xc: Mr. Nick Nichols, Facilities - DOE

STATEMENT OF PROBABLE COSTS

STATEMENT OF PROBABLE COST

Ewa Makai Middle School – The School of Tomorrow

The estimated construction cost for this entire school is approximately $64 million dollars. This translates to approximately $314 per SF.

CC ARCHITECTS
COST ESTIMATES - PLANNING AND DESIGN PHASES

PROJECT	EWA MAKAI MIDDLE SCHOOL		
	EWA, OAHU, HAWAII	DATE	27 JULY 2005
D O E Job No		SHEET	1 of 1
PRIME CONSULTANT	Mitsunaga & Associates, Inc	DESIGN STAGE:	
ESTIMATOR	Cost Engineering of Hawaii, Inc		PLANNING

For estimate, escalation assumed at 0.4167 % per month
Construction period assumed at 730 working days

SUMMARY OF CONSTRUCTION COST		
A Primary Facility (list primary facility or facilities with cost)		$51,529,773
Middle School	193,724 /gsf	$41,507,304
Mechanical		$6,616,000
Electrical		$3,406,469
B Supporting Facilities (list supporting facilities or facilities with cost)		$8,024,266
Site Electrical		$185,000
Civil		$4,381,100
Covered Playcourt, Stage & Storage	11,598 /gsf	$1,444,021
Landscaping		$014,145
C Other Cost (list other costs)		$5,845,404
Escalation 10.00%		$5,845,404
TOTAL ESTIMATED CONSTRUCTION COST		$64,200,443

EWA MAKAI MIDDLE SCHOOL EDUCATIONAL PLAN

DRAFT March 11, 2005

'Ewa Makai Middle School

Educational Plan

This document is to be used for guidance during the design charette for the new school. It was developed with input from:

Lydell Acosta	Anne Greseth-Kim	Chantal Moncrease
Naomi Almoto	Tosh Hosoda	Jim Moylan
Tom Berg	Randy Ibarra	Debra Nakamoto
Christopher Callisto	Rie Kortama	Nick Nichols
Art Caracol	Brenda Lowrey	Annette Nishikawa
Mamo Carriera	Debbie Luning	John Okinaka
Una Chan	Eileen Lynn	Faye Taira
Curtis Chang	Tesha Malama	Sharene Tam
Anthony Chun	Tisa Mercado	Marvie Yonamine
Guy Figueroa	Jenna Minara	

'Ewa Makai Middle School

Vision:

'Ewa Makai Middle School

where learners are inspired to explore

Mission:

Together we will:

1. Cultivate a safe, nurturing and rich environment through interactive partnerships and symbiotic relationships
2. Engage in a dynamic, responsive curriculum to produce life-long learners
3. Unify a sense of community pride by fostering partnerships throughout the community
4. Be receptive to technological advancements

while encouraging the growth of positive, productive citizens.

General Instructional Needs

Middle school education needs to address the changing needs of adolescents as they transition from an elementary school setting on to high school. In addition, our ever-changing, global, knowledge-based economy demands that schools equip our students of today and tomorrow with the skills to survive and creatively to thrive in such a world. The diverse needs of all students must also be considered along with the benefits derived from positive mentoring relationships with adults on campus. For Eva Marie Middle School, these objectives will be met through the establishment of small learning communities within the larger middle school environment. The design of the school shall support learning within grade levels and provide the flexibility to cluster teams within grade levels and / or across grade levels.

Curriculum will be delivered through a variety of instructional strategies and group settings. A fundamental aspect of the middle school program will be to provide relevant learning opportunities to address the state standards and to explore various curriculum through hands-on, activity-based experiences. Groupings may vary from independent learning, individual classes, learning, up to large group activities. The school facilities shall be flexible and designed to support the exploratory nature of the curriculum.

Flexibility can be provided in many ways: through the thoughtful clustering of instructional spaces, appropriate use of operable walls, the inclusion of break-out rooms, and consideration for the functions needed to support a quality, standards-based education. The clustering of instructional spaces should recognize the learning opportunities within the four core classes (Language Arts, Math, Science, and Social Studies) and therefore provide settings to accommodate a variety of group sizes. The ability to open up walls between spaces through the use of operable walls is a benefit that should be considered along with all the functions of the individual spaces. Break-out rooms can provide small meeting areas, opportunities for one-on-one tutoring and additional instructional spaces when they are appropriately located with good supervision capabilities.

Provisions to support a multi-track schedule should be addressed in the design of the school, including teacher planning areas and storage spaces.

Spaces to address the multiple intelligences of middle school students (kinesthetic, inter-personal, intra-personal, visual, auditory, etc.) should be considered within both the general instructional settings and the exploratory or specialty curriculum areas.

Specialty Curriculum Focus Areas

Exploratory curriculum is an important aspect of middle school education and an integral part of the vision for the school. It provides opportunities for grouping students into different teams or learning clusters. The design of the school shall support the three specialty focus areas of environmental studies, performing arts, and health and fitness. Whether specific spaces are designated for these specialty areas, or through the adaptable use of general classrooms, science laboratories, and multi-purpose spaces, the school shall reflect the value placed on these themes. The school's mission can support these themes through cultivating interactive partnerships and being receptive to technological advances.

Staff development and opportunities for teachers to plan together will be encouraged. Dedicated spaces for these functions are important to support the staff in their mission of providing a quality, challenging, standards-based education for the students and to allow for modeling cooperative behaviors for the students. Coordination between core teachers and specialty focus teachers will be encouraged to support multi-disciplinary learning opportunities.

Special Education Needs

The success of all learners is an important goal of the school. Inclusion will be the standard to integrate special education students into the general learner population. To reach this goal a variety of spaces to support the needs of special education students within the team setting will be required. Fully self-contained special education classrooms shall be included in the core classroom clusters throughout the campus. Resource rooms should also be dispersed throughout the campus. The adjacencies and relations ips of these spaces to support facilities and ease of access to drop off areas should be given detailed consideration.

Student Center

The advisor/advisee relationships integral to the middle school philosophy, along with providing opportunities for mentoring relationships on campus support the idea of creating a student center within the campus. This center would physically group the core admin, student activities coordinator/center, support services for special education services, the PCNC, health center, and safety officer. While the adults housed here would interact with the administration, special service providers and parents, the main focus would be on the students and supporting the all around needs of every child and family.

Student Activities

While the physical location of the student activities coordinator's office and the adjacent center would be located in a Student Center facility, the campus itself should be designed in support of the vision – a place where learners are inspired to explore – and mission, including interactive partnerships, life-long learning, and unifying community pride. Designing for the vision and mission can translate into a welcoming and effective environment for student activities throughout the campus.

School / Community Connections

This school has the unique challenge and opportunity to bring the community together, and the physical design should reflect this. There should be true sense of identity, a sense of belonging, and a connectedness to the community. A major design impact in helping the community to feel welcome and willing to partner with the school will be the way traffic flow is planned out and if enough parking is provided. Overflow parking for community events should also be considered. A directory or "you are here" type of sign system may be appropriate.

Administration

An important balance for middle school administration is to be able to monitor the campus and maintain control without being seen negatively as the "boss." While it is important to maintain control of the entry to the campus, the administrators should also be connected to the interior of the campus. Strong connections exist between the administrative staff and the counselors, health center, safety officer, PCNC and student activities coordinator. Within the admin area conference spaces should be provided that are easily accessible while maintaining a high level of privacy. Privacy throughout administrative spaces is also a necessity.

Library / Resource Center

The design of the library should reflect the high value placed on literacy by the school and community. The location of the library should take into consideration the possible after hours use along with a desired ease in returning books after hours. Whether it is learning through traditional books and resources, or utilizing technology to learn, the library is a significant component of a middle school because of its endless opportunities for exploration.

Dining / Cafeteria

Flexibility in the cafeteria is important in order to accommodate the dining needs of the students while allowing for school assemblies and other events. The inclusion of a permanent "stage" is required along with secured storage spaces that could be used by the school and / or by community groups or others who might rent the cafeteria. The size of the stage should be maximized, within building code limits, given the performing arts focus of the school.

In order to promote and support the healthy eating habits of students, the idea of remote kiosks or other spaces on campus where cafeteria food could be sold is desired. These special outdoor areas would provide comfortable gathering spaces for the students and

of an area close to congregating in the cafeteria. If vending machines are provided on the campus they need to provide healthy choices and be in a secure location.

Outdoor Areas

The design of the school needs to recognize that while middle school students might say that school is their life – it may not be the academics that is foremost in their minds but the socializing and peer relationships that they associate with school. Therefore the school's vision and mission need to be reflected in the design of the outdoor areas as well as in the building design.

The need for shade is paramount given the climate of the campus site. The inclusion of a covered playcourt with a presentation area is a necessity that can provide an area large enough for school-wide assemblies and meet the dual needs of health and fitness and performing arts.

The spaces between buildings shall be given as much thought as the more formal outdoor areas such as a main assembly green, campus entries, parent drop-off zones, bus waiting areas and outdoor gathering spaces of various sizes. The design of the school needs to support learning in all settings. Tempering the sun's heat and providing sheltered areas are necessary for the comfortable utilization of outdoor areas.

The landscape design for the school needs to take into consideration many factors. It should be indigenous to the area (require low water levels), be easy to maintain, provide groundcoverings that do not invite critters, and provide shade.

Safety and Security

Providing for the safety and security of students and staff includes not only the building design but the efficient circulation and separation of vehicular and pedestrian traffic. The campus pedestrian entries should be welcoming and direct while still providing clear traffic flow for parent drop-offs, bus drop-offs, staff vehicles and service vehicles. It is envisioned that the students will arrive at the school on bicycles and as pedestrians

from various directions, so multiple entrances (with appropriate locations for bicycle parking) shall be provided, along with the means to secure these entrances after hours.

The facilities must be designed in a manner to resist vandalism and theft and therefore it is the challenge of the designers to balance the visual implications of security with the integral relationship desired with the community.

Other Considerations

The thermal comfort of students and staff shall be an important consideration in the design of the school. An energy efficient system of air conditioning should be provided along with accommodations for the effective natural ventilation of specific areas.

The electrical and utility support systems should be designed with a view toward the future. Possible security alarms, security systems and future technology needs should be anticipated in the layout and sizing of the original systems.

LEED NC v2.2 for Ewa Makai Middle School

Certified: 29-35 points Silver: 36-42 points Gold: 43-56 points Platinum: 57-77 points Possible Points 77

	Total points targeted		**38**	15			
			Yes	**Maybe**	**Assigned to**	**Remarks**	**Submittals required**
Sustainable Sites	**Possible Points**	**16**	**9**	**4**			
Prerequisite 1	**Erosion & Sedimentation Control**				Civil		Erosion control plan per EPA's guidelines
Prerequisite 2	**Environmental Contamination Free Site**				Civil		Environmental assessment report
Credit 1	**Site Selection**	**1**	1		Civil	Verify site is not a prime farmland or site's elevation is elevation is lower than 5 feet above the elevation of the 100-year flood as defined by FEMA	
Credit 2	**Development Density & Communication Connectivity**	**1**		1			
Credit 3	**Brownfield Redevelopment**	**1**					
Credit 4.1	**Alternative Transportation**, Public Transportation Access	**1**	1		DOE/Architect	Review Ewa Makai's public transportation plan	Site plan showing bus drop off
Credit 4.2	**Alternative Transportation**, Bicycle Storage & Changing Rooms	**1**	1		Architect	5% of occupant load	Site plan showing bicycle racks and shower facilities with calculations
Credit 4.3	**Alternative Transportation**, Low Emitting/Fuel Efficient Vehicles	**1**		1	DOE/Architect	Verify if school part of 'Cleaner Cities' organization	
Credit 4.4	**Alternative Transportation**, Parking Capacity	**1**	1		DOE/Architect	does not exceed zoning requirements, car/van pooling for 5% of occupant load	documentation of car pooling
Credit 5.1	**Site Development**, Portect or Restore Habitat	**1**					
Credit 5.2	**Site Development**, Maximize Open Space	**1**		1	Architect	building footprint + driveways + parking and playcourts >local zoning for open space by 25%	zoning documentation, site plan
Credit 6.1	**Stormwater Design**, Quantity Control	**1**	1				Stormwater management plan
Credit 6.2	**Stormwater Design**, Quality Control	**1**	1		Civil	compliance/exceeds EPA's best management practice for removal of Total Suspended Soils (TSS) and Total Phosphorous (TP)	
Credit 7.1	**Heat Island Effect**, Non-Roof	**1**		1	Architect/Landscape	Shading with trees within 5 years, high reflective materials for sidewalks etc., verify wih DOE	
Credit 7.2	**Heat Island** Effect, Roof	**1**	1		Architect	Solar reflectance Index for steep roofs >29, for low slope roofs>78	
Credit 8	**Light Pollution Reduction**	**1**	1		Electrical	IESNA best practices (shielding of exterior luminaire), no light spillover from interior	photometric plan required
	Future Expansion Within Master Plan	**1**					
	Joint Use of Facilities	**1**	1		DOE/Architect		Agreement between DOE and adjoining neighborhood, site plan
Water Efficiency		**6**	**3**	**3**			
Credit 1.1	**Water Efficient Landscaping**, Reduce by 50%	**1**	1		Landscape		

Credit 1.2	**Water Efficient Landscaping**, No Potable Use or No Irrigation	**1**	1		Landscape/Architect	rain-water harvesting & existing non-potable waterline (Campbell Estate)	
Credit 2	**Innovative Wastewater Technologies**	**1**		1	Plumbing	rain-water harvesting, low flow faucets, waterless urinals, misc. equipment using less water	
Credit 3.1	**Water Use Reduction**, 20% Reduction	**1**	1		Plumbing	low flow faucets, low flow fixtures, wash-fountains (http://www.bradleycorp.com/prodinfo/fixtures/founts/index.htm)	Low-flow lavatory -1.8gpf, low flow kitchen sink-1.8gpf,low flow shower-1.8gpf,hand wash fountain-0.5gpf, low flow water closet - 1.1 gpf
Credit 3.2	**Water Use Reduction**, 30% Reduction	**1**		1	Plumbing		
Credit 4	**Process Water Use Reduction**, 20% Reduction	**1**		1	Kitchen	dishwasher - 1gallon/rack, Food Steamers - 2 gallons/hour or Boilerless steamers only Pre-Rinse Spray Valves -1.4 gallons per minute Kitchen Sinks Faucet6- 2.2 gallons/minute	
Energy & Atmosphere	Possible Points	**17**	**4**	**6**			
Prereq 1	**Fundamental Building Systems Commisioning**				Commissioning agent	between 50c/sft - $1/sft	between $100,000 - $200,000
Prereq 2	**Minimum Energy Performance**				Consultant	Mechanical to provide Carrier energy analysis info.	
Prereq 3	**Fundamental Refrigerant Management**				Mechanical		
Credit 1.1	**Optimize Energy Performance**	**10**	4	2	Consultant	Utility charge-.30c/kWh, hours of operation, electrical usage, equipment info.	hours of operation, electrical usage, equipment info. (ASHRAE base case-1.67W/sft, design to 1.2W/sft)
Credit 2.1	**On-site Renewable Energy**	**3**		1	Architect		double glazing w/ low-e
Credit 3	**Enhanced Commissioning**	**1**		1	Architect	Verify	
Credit 4	**Enhanced Refrigerant Management**	**1**		1	Mechanical		Refrigerant 134-A v/s Refrigerant 123
Credit 5	**Measurement & Verification**	**1**		1	Architect	Verify	
Credit 6	**Green Power**	**1**					
Materials & Resources	Possible Points	**13**	**5**	**1**			
Prereq 1	**Storage & Collection of Recyclables**				Architect	Verify with school custodial staff	Recycling plan for facility
Credit 1.1	**Building Reuse**, Maintain 75% of Existing Walls, Floors & Roof	**1**					
Credit 1.2	**Building Reuse**, Maintain 100% of Existing Walls, Floors & Roof	**1**					
Credit 1.3	**Building Reuse**, Maintain 50% of Interior Non-Structural Elements	**1**					
Credit 2.1	**Construction Waste Management**, Divert 50%	**1**	1		Contractor	Specifications required (metal, masonry, gyp.bd)	actual tickets from recycling companies
Credit 2.2	**Construction Waste Management**, Divert 75%	**1**					
Credit 3.1	**Resource Reuse**, Specify 5%	**1**				Verify if any existing furniture/equipment will be used	
Credit 3.2	**Resource Reuse**, Specify 10%	**1**					
Credit 4.1	**Recycled Content**, Specify 10% PC + PI	**1**	1		Architect/Interiors	fly-ash concrete, linoleum, carpet, ceiling tiles	
Credit 4.2	**Recycled Content**, Specify 20% PC + PI	**1**		1	Architect/Interiors		

Credit 5.1	**Regional Materials**, 20% Manufactured Locally	**1**	1		Contractor	Specifications required	
Credit 5.2	**Regional Materials**, of 20% Above, 50% Harvested Locally	**1**					
Credit 6	**Rapidly Renewable Materials**	**1**	1		Contractor	Specifications required	
Credit 7	**Certified Wood**	**1**	1		Contractor	Specifications required	
Indoor Environmental Quality	Possible Points	**19**	**14**	**1**			
Prereq 1	**Minimum IAQ Performance**				Architect		
Prereq 2	**Environmental Tobacco Smoke (ETS) Control**				Architect		copy of approved bill, letter from school
Prereq 3	**Minimum Acoustical Performance**				Architect		45 Dba minimum
Credit 1	**Outdoor Air Delivery Monitoring**	**1**	1		Mechanical	specify CO2 sensors	
Credit 2	**Increased Ventilation**	**1**	1		Mechanical		
Credit 3.1	**Construction IAQ Management Plan**, During Construction	**1**	1		Contractor	MERV 8 filters during construction, specifications required	Product data cut-sheets and photographs
Credit 3.2	**Construction IAQ Management Plan**, Before Occupancy	**1**	1		Contractor	MERV 13 filters before occupancy, specifications required	Product data cut-sheets and photographs
Credit 4.1	**Low-Emitting Materials**, Adhesives & Sealants	**1**	1		Interiors	Specifications required	Product data cut-sheets required
Credit 4.2	**Low-Emitting Materials**, Paints & Coatings	**1**	1		Interiors	Specifications required	Product data cut-sheets required
Credit 4.3	**Low-Emitting Materials**, Flooring Systems	**1**	1		Interiors	Specifications required	Product data cut-sheets required
Credit 4.4	**Low-Emitting Materials**, Composite Wood & Agrifiber Products	**1**	1		Interiors	Specifications required	Product data cut-sheets required
Credit 5	**Indoor Chemical & Pollutant Source Control**	**1**	1		Interiors	walk-off mats, exhaust system	
Credit 6.1	**Lighting System Design & Controllability**	**1**	1		Electrical	manual over-ride	
Credit 6.2	**Thermal Comfort Controllability**	**1**	1		Mechanical		
Credit 7.1	**Indoor Environmental Comfort**, Design	**1**	1		Mechanical		ASHRAE 55-2004 compliance documentation
Credit 7.2	**Indoor Environmental Comfort**, Verification	**1**					
Credit 8.1	**Daylight & Views**, Daylight 75% of Spaces	**1**	1		Architect		Light transmittance of at least 85%
Credit 8.2	**Daylight & Views**, Views for 90% of Spaces	**1**		1	Architect		
	Enhanced Acoustical Performance	**2**					
	Mold Prevention	**1**					
	Low Impact Cleaning & Maintenance Equipment Policy	**1**	1		DOE/Architect	Verify w/ DOE and school custodial staff (Green Seal products)	Product data cut-sheets
Innovation & Design	Possible Points	6	**3**	**0**			
Credit 1.1	**Innovation in Design**	**4**	1		Architect	Water harvesting	
Credit 2	**LEED Accredited Professional**	**1**	1		Architect		
Credit 3	**The School As a Teaching Tool**	**1**	1		DOE/Architect	Develop awareness program and/or integrate into school curriculum	

Certified: 29-35 points		
Silver: 36-42 points	**38**	**14**
Gold: 43-56 points		
Platinum: 57-77 points		

Ideas for exploration

1 Water harvesting - multiple collection points, localized landscape distribution v/s central OH/underground tank water to be used for irrigation/flushing — Coordinate w/ Civil, landscape and plumbing

2

GENERAL NOTES :

1) FOR INTERIOR ELEVATIONS SEE SHEETS A-8.1 THRU A-8.__

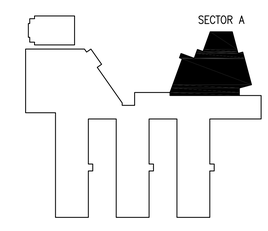

KEY PLAN
NOT TO SCALE

A
A-4.1

SECTOR "A" FLOOR PLAN - ADMINISTRATION/LIBRARY/DINING/KITCHEN

SCALE : 1/8" = 1'-0"

ELEVATION KEY

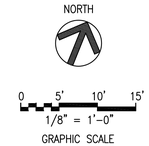

GRAPHIC SCALE

REVISION NO.	SYM.	DESCRIPTION	SHT OF ___	DATE

THIS WORK WAS PREPARED BY ME OR UNDER MY SUPERVISION AND CONSTRUCTION OF THIS PROJECT WILL BE UNDER MY OBSERVATION.
EXPIRATION DATE:

MITSUNAGA & ASSOCIATES, INC.

FACILITIES DEVELOPMENT BRANCH
DEPARTMENT OF EDUCATION
STATE OF HAWAII

EWA MAKAI MIDDLE SCHOOL
DOE PROJECT NO. P00135-06
EWA OAHU HAWAII

SECTOR "A" FLOOR PLAN
ADMINISTRATION/LIBRARY/DINING/KITCHEN

MITSUNAGA & ASSOCIATES, INC.

DESIGNED BY: SW	CHECKED BY: SW		DRAWING NO. A-4.1
DRAWN BY: CAD	APPROVED BY: SW	DATE NOVEMBER 1, 2007	SHEET ___ OF ___ SHTS
SCALE: AS SHOWN			

FILE _____ DRAWER _____ FOLDER _____

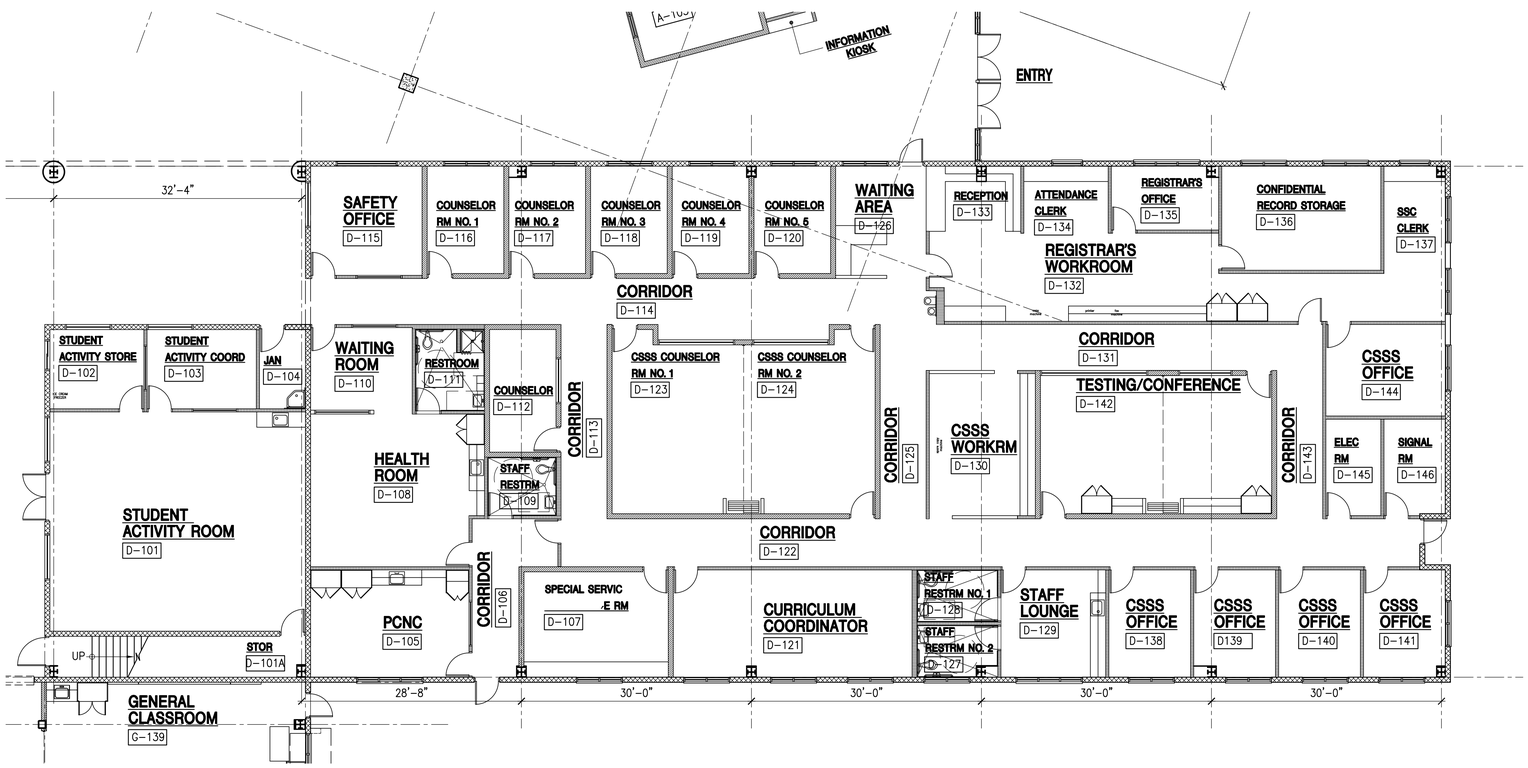

GENERAL NOTES :

1) FOR INTERIOR ELEVATIONS SEE SHEETS A-8.1 THRU A-8.__

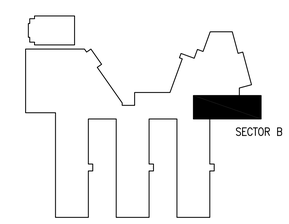

KEY PLAN
NOT TO SCALE

A
A-4.2

SECTOR "B" FLOOR PLAN - STUDENT SERVICES (COUNSELING)

SCALE : 1/8" = 1'-0"

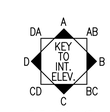

ELEVATION KEY

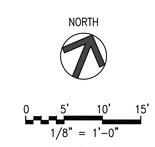

GRAPHIC SCALE

REVISION NO.	SYM.	DESCRIPTION	SHT OF ___	DATE

THIS WORK WAS PREPARED BY ME OR UNDER MY SUPERVISION AND CONSTRUCTION OF THIS PROJECT WILL BE UNDER MY OBSERVATION.
EXPIRATION DATE:

MITSUNAGA & ASSOCIATES, INC.

FACILITIES DEVELOPMENT BRANCH
DEPARTMENT OF EDUCATION
STATE OF HAWAII

EWA MAKAI MIDDLE SCHOOL
DOE PROJECT NO. P00135-06
EWA OAHU HAWAII

SECTOR "B" FLOOR PLAN
STUDENT SERVICES (COUNSELING)

MITSUNAGA & ASSOCIATES, INC.

DESIGNED BY: SW	CHECKED BY: SW		DRAWING NO. A-4.2
DRAWN BY: CAD	APPROVED BY: SW	DATE NOVEMBER 1, 2007	SHEET ___ OF ___ SHTS
SCALE: AS SHOWN			

FILE _____ DRAWER _____ FOLDER _____

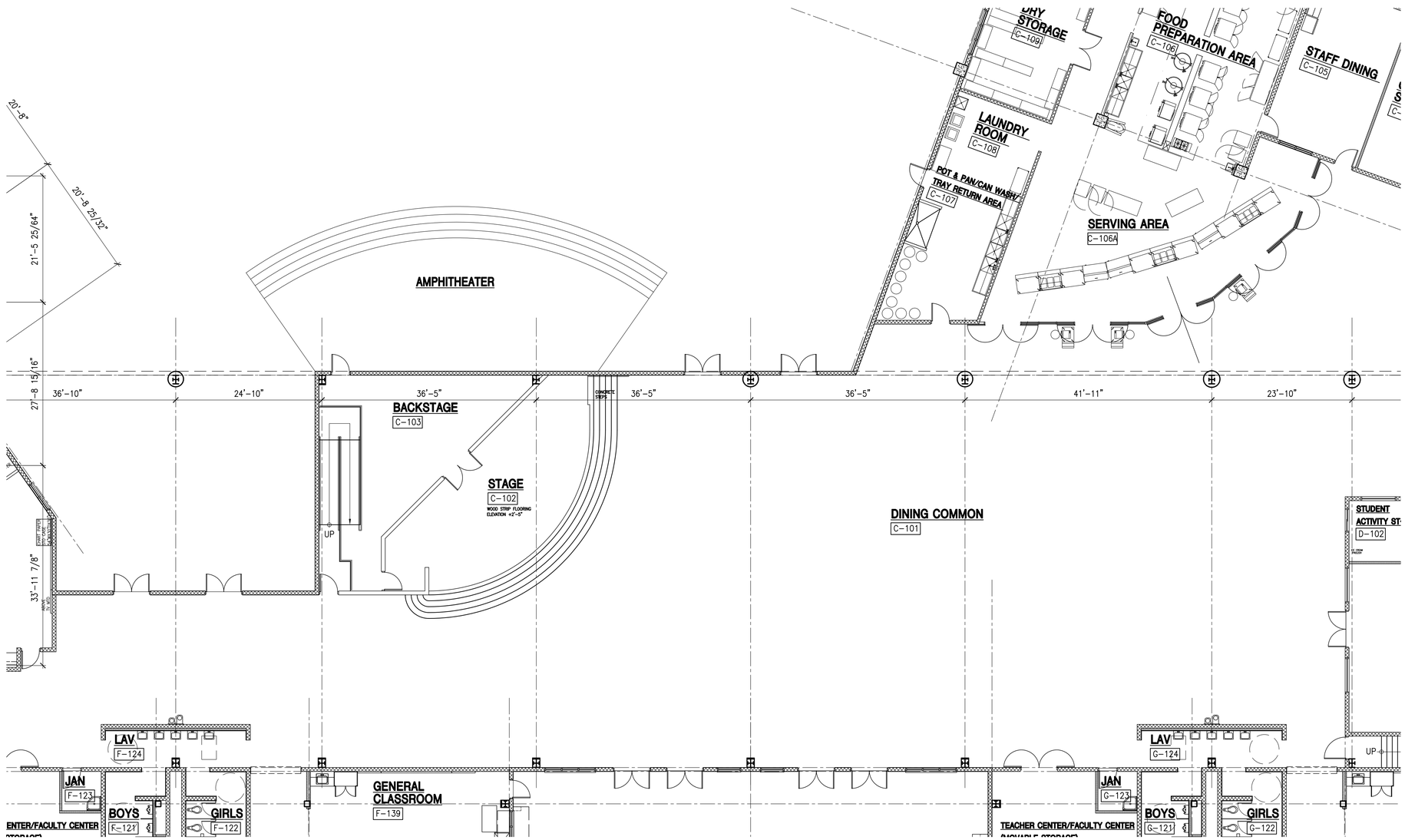

GENERAL NOTES :

1) FOR INTERIOR ELEVATIONS SEE SHEETS A-8.1 THRU A-8._

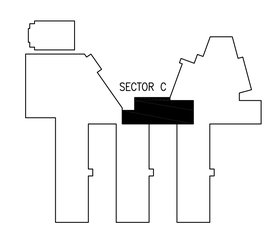

KEY PLAN
NOT TO SCALE

A
A-4.3

SECTOR "C" FLOOR PLAN - DINING/COMMONS

SCALE : 1/8" = 1'-0"

ELEVATION KEY

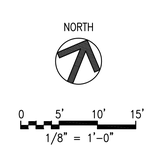

GRAPHIC SCALE

REVISION NO.	SYM.	DESCRIPTION	SHT ___ OF ___	DATE

THIS WORK WAS PREPARED BY ME OR UNDER MY SUPERVISION AND CONSTRUCTION OF THIS PROJECT WILL BE UNDER MY OBSERVATION.
EXPIRATION DATE:

MITSUNAGA & ASSOCIATES, INC.

FACILITIES DEVELOPMENT BRANCH
DEPARTMENT OF EDUCATION
STATE OF HAWAII

EWA MAKAI MIDDLE SCHOOL
DOE PROJECT NO. P00135-06
EWA OAHU HAWAII

SECTOR "C" FLOOR PLAN
DINING/COMMONS

MITSUNAGA & ASSOCIATES, INC.

DESIGNED BY: SW	CHECKED BY: SW		DRAWING NO.
DRAWN BY: CAD	APPROVED BY: SW	DATE NOVEMBER 1, 2007	A-4.3
SCALE: AS SHOWN			SHEET ___ OF ___ SHTS.

FILE _____ DRAWER _____ FOLDER _____

A
A-4.4

SECTOR "D" FLOOR PLAN - ELECTIVES

SCALE : 1/8" = 1'-0"

GENERAL NOTES :

1) FOR INTERIOR ELEVATIONS SEE SHEETS A-8.1 THRU A-8.__

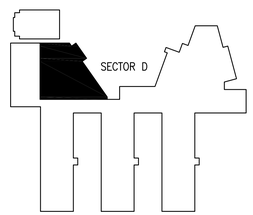

KEY PLAN
NOT TO SCALE

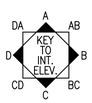

ELEVATION KEY

NORTH

0 5' 10' 15'
1/8" = 1'-0"
GRAPHIC SCALE

REVISION NO.	SYM.	DESCRIPTION	SHT OF	DATE

FACILITIES DEVELOPMENT BRANCH
DEPARTMENT OF EDUCATION
STATE OF HAWAII

EWA MAKAI MIDDLE SCHOOL
DOE PROJECT NO. P00135-06
EWA OAHU HAWAII

SECTOR "D" FLOOR PLAN
ELECTIVES

THIS WORK WAS PREPARED BY ME OR UNDER MY SUPERVISION AND CONSTRUCTION OF THIS PROJECT WILL BE UNDER MY OBSERVATION.
EXPIRATION DATE:

MITSUNAGA & ASSOCIATES, INC.

MITSUNAGA & ASSOCIATES, INC.		DRAWING NO.
DESIGNED BY: SW	CHECKED BY: SW	A-4.4
DRAWN BY: CAD	APPROVED BY: SW	DATE / SHEET
SCALE: AS SHOWN		NOVEMBER 1, 2007 / OF __ SHTS

FILE _____ DRAWER _____ FOLDER _____

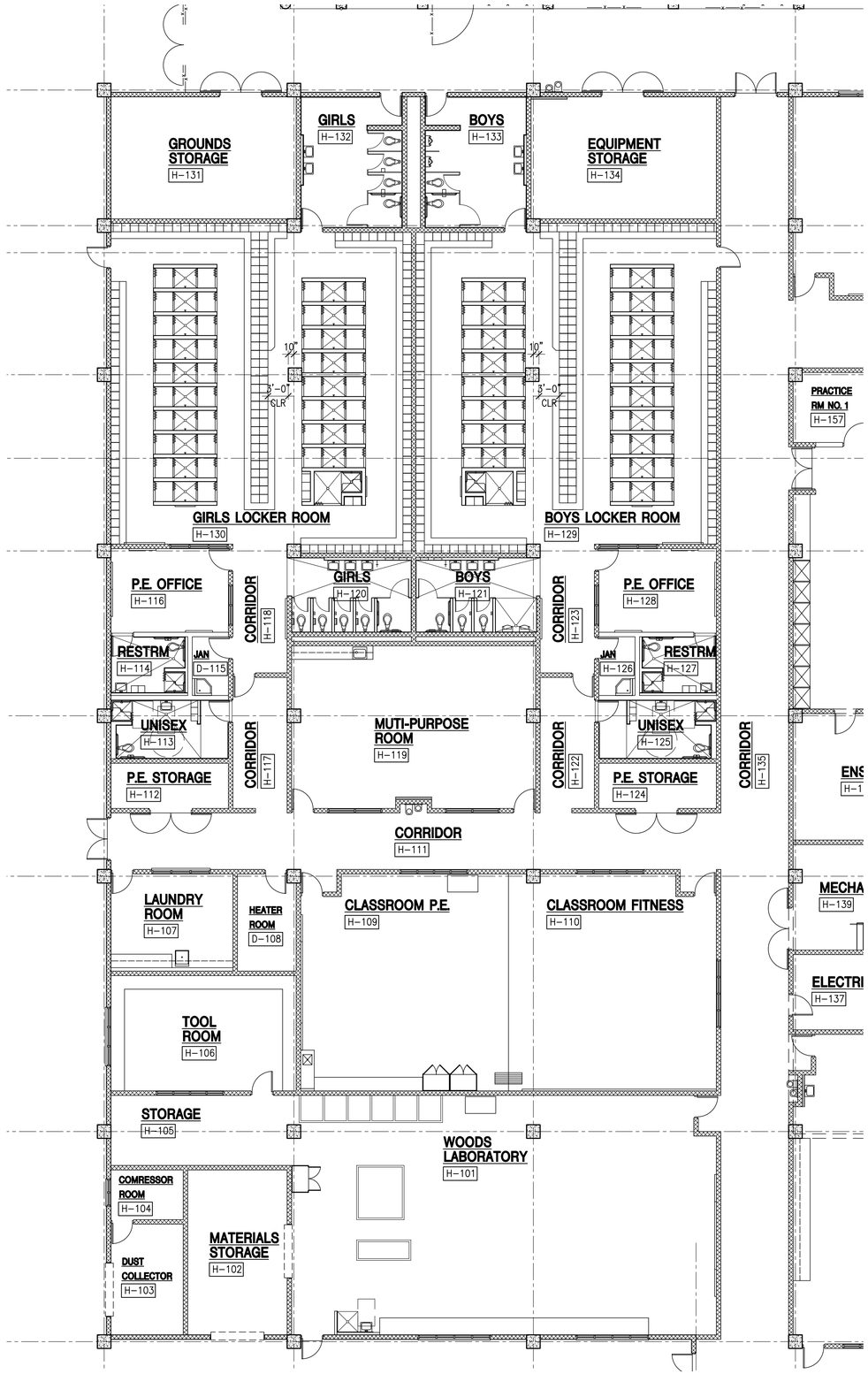

A
A-4.5

SECTOR "E" FLOOR PLAN - ELECTIVES

SCALE : 1/8" = 1'-0"

GENERAL NOTES :

1) FOR INTERIOR ELEVATIONS SEE SHEETS A-8.1 THRU A-8.__

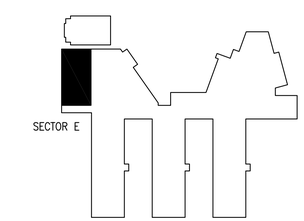

KEY PLAN
NOT TO SCALE

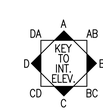

ELEVATION KEY

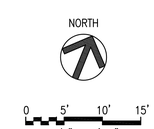

GRAPHIC SCALE

REVISION NO.	SYM.	DESCRIPTION	SHT ___ OF ___	DATE

THIS WORK WAS PREPARED BY ME OR UNDER MY SUPERVISION AND CONSTRUCTION OF THIS PROJECT WILL BE UNDER MY OBSERVATION.
EXPIRATION DATE:

MITSUNAGA & ASSOCIATES, INC.

FACILITIES DEVELOPMENT BRANCH
DEPARTMENT OF EDUCATION
STATE OF HAWAII

EWA MAKAI MIDDLE SCHOOL
DOE PROJECT NO. P00135-06
EWA OAHU HAWAII

SECTOR "E" FLOOR PLAN
ELECTIVES

MITSUNAGA & ASSOCIATES, INC.

DESIGNED BY: SW	CHECKED BY: SW		DRAWING NO. A-4.5
DRAWN BY: CAD	APPROVED BY: SW	DATE NOVEMBER 1, 2007	SHEET ___ OF ___ SHTS
SCALE: AS SHOWN			

FILE _____ DRAWER _____ FOLDER _____

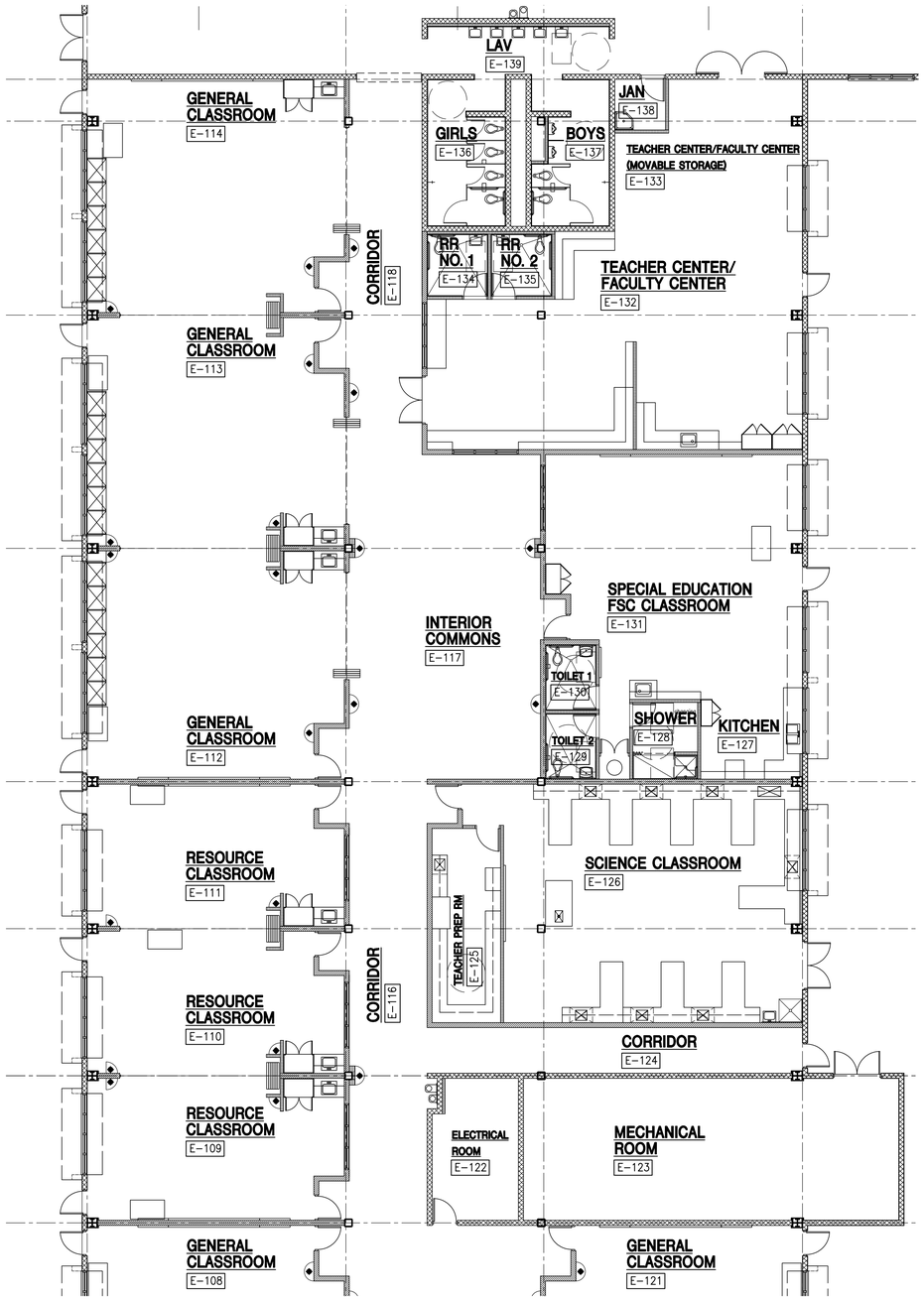

SECTOR "F" - NEIGHBORHOOD 1

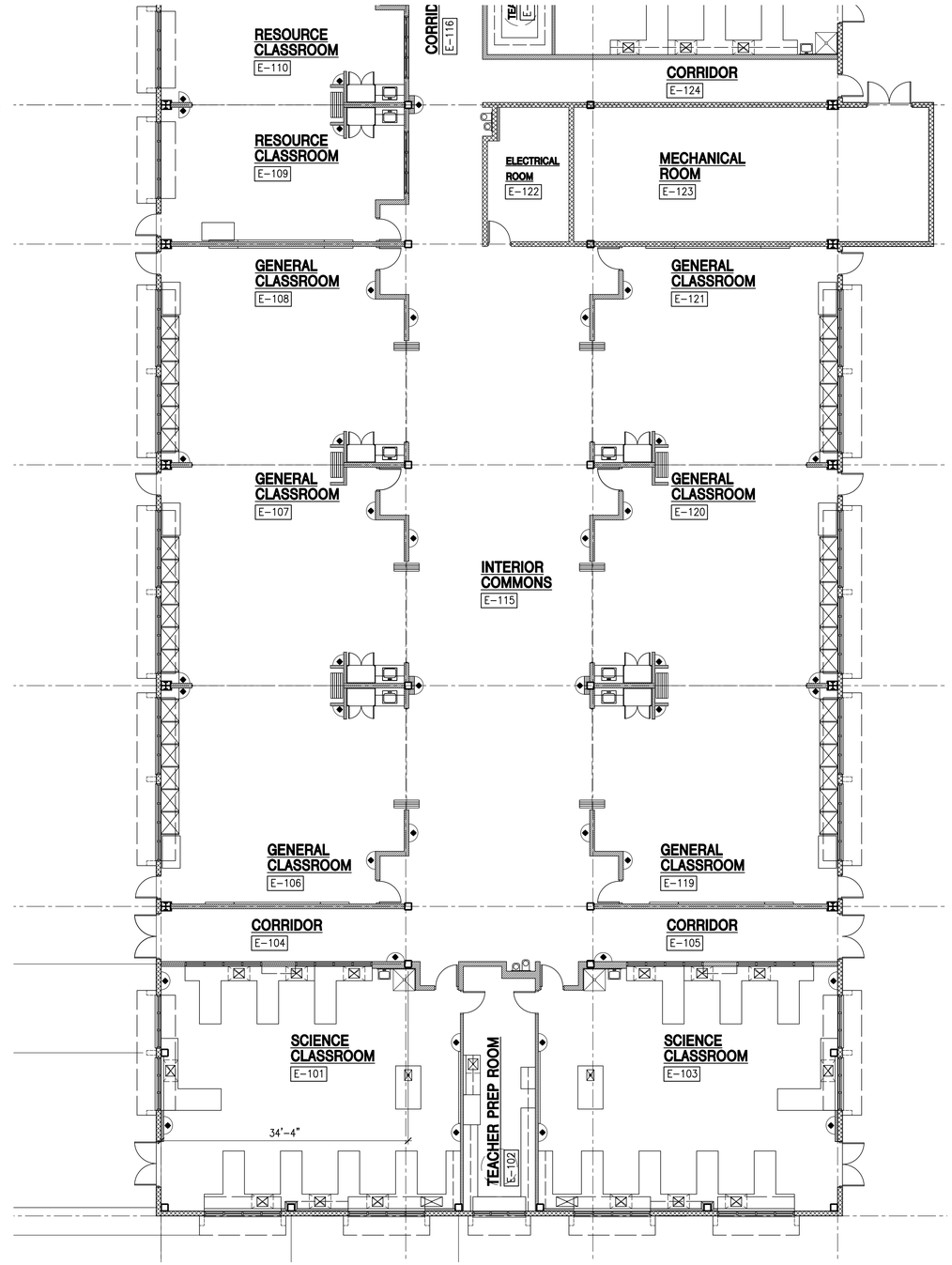

SECTOR "G" - NEIGHBORHOOD 1

GENERAL NOTES :

1) FOR INTERIOR ELEVATIONS SEE SHEETS A-8.1 THRU A-8.__

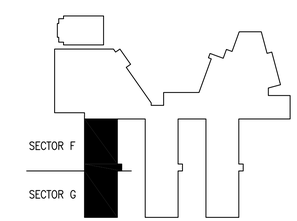

KEY PLAN
NOT TO SCALE

A / A-4.6 **SECTORS "F" & "G" FLOOR PLANS - NEIGHBORHOOD 1**
SCALE : 1/8" = 1'-0"

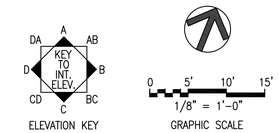

REVISION NO.	SYM.	DESCRIPTION	SHT ___ OF ___	DATE

FACILITIES DEVELOPMENT BRANCH
DEPARTMENT OF EDUCATION
STATE OF HAWAII

EWA MAKAI MIDDLE SCHOOL
DOE PROJECT NO. P00135-06
EWA OAHU HAWAII

SECTORS "F" & "G" FLOOR PLANS
NEIGHBORHOOD 1

THIS WORK WAS PREPARED BY ME OR UNDER MY SUPERVISION AND CONSTRUCTION OF THIS PROJECT WILL BE UNDER MY OBSERVATION.
EXPIRATION DATE:

MITSUNAGA & ASSOCIATES, INC.

MITSUNAGA & ASSOCIATES, INC.			DRAWING NO. A-4.6
DESIGNED BY: SW	CHECKED BY: SW		
DRAWN BY: CAD	APPROVED BY: SW	DATE NOVEMBER 1, 2007	SHEET ___ OF ___ SHTS
SCALE: AS SHOWN			

FILE _____ DRAWER _____ FOLDER _____

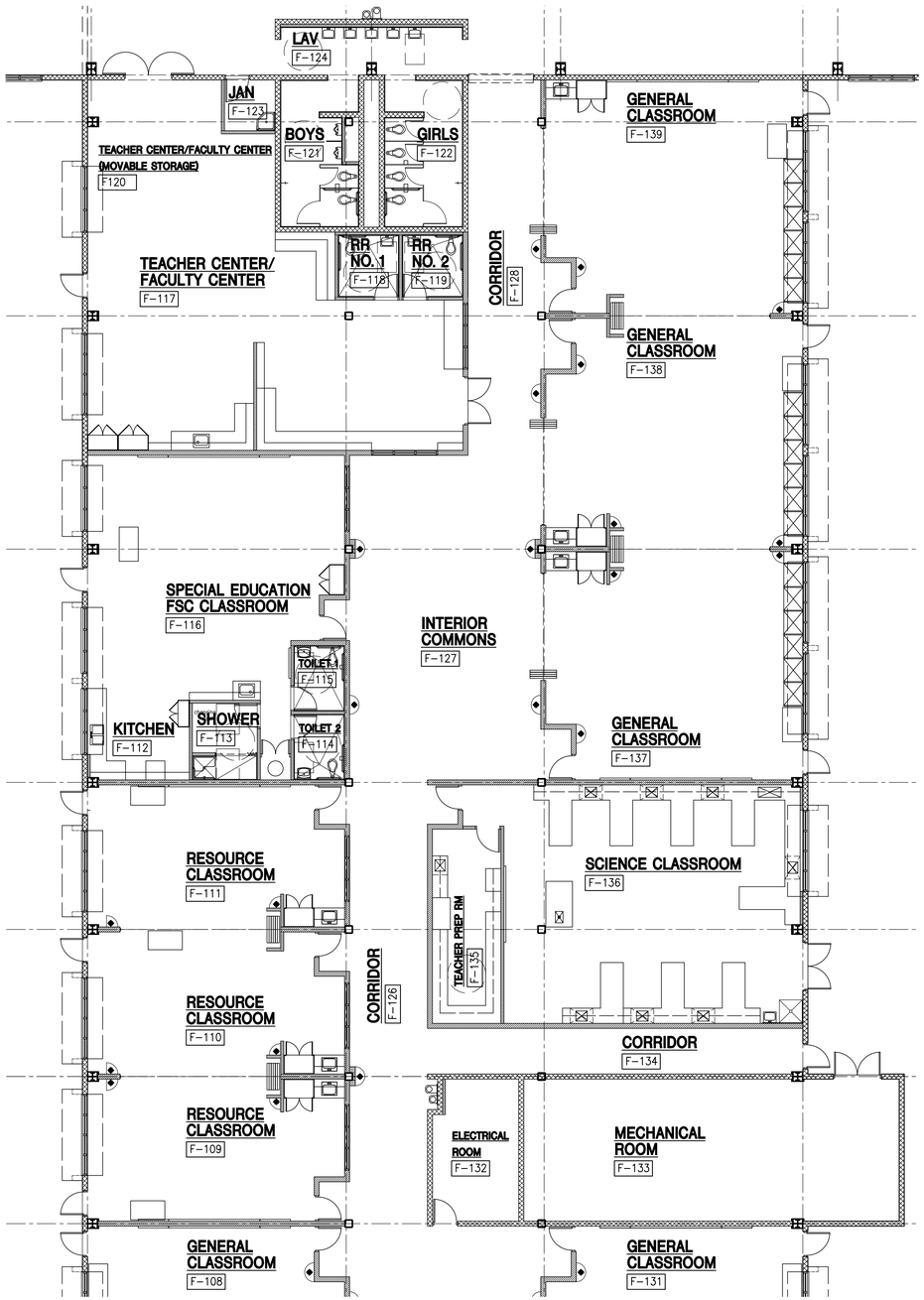

SECTOR "H" - NEIGHBORHOOD 2

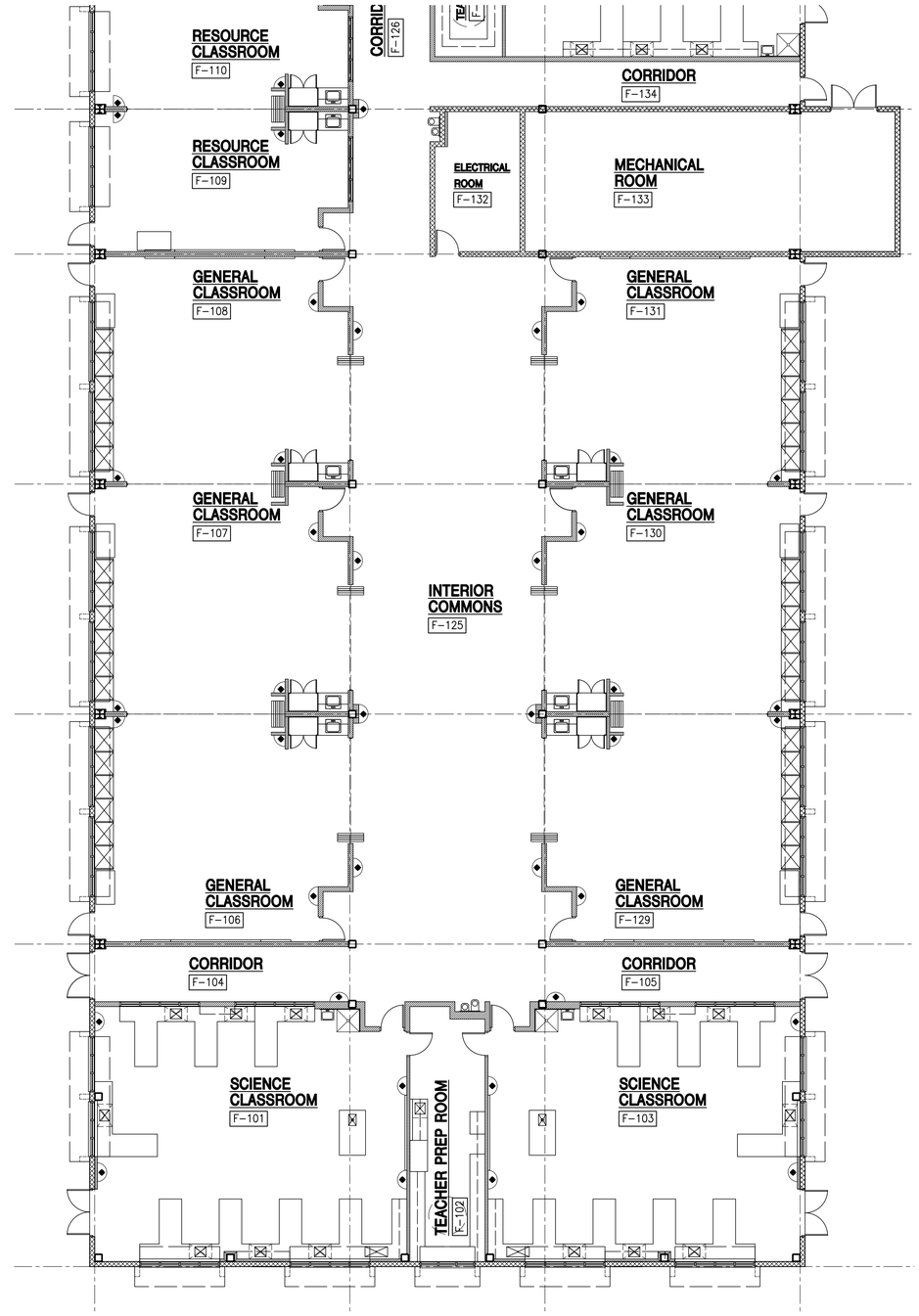

SECTOR "J" - NEIGHBORHOOD 2

GENERAL NOTES :

1) FOR INTERIOR ELEVATIONS SEE SHEETS A-8.1 THRU A-8.__

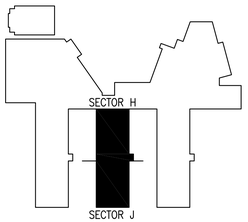

KEY PLAN
NOT TO SCALE

A
A-4.7

SECTORS "H" & "J" FLOOR PLANS - NEIGHBORHOOD 2

SCALE : 1/8" = 1'-0"

ELEVATION KEY

1/8" = 1'-0"
GRAPHIC SCALE

REVISION NO.	SYM.	DESCRIPTION	SHT ___ OF ___	DATE

FACILITIES DEVELOPMENT BRANCH
DEPARTMENT OF EDUCATION
STATE OF HAWAII

EWA MAKAI MIDDLE SCHOOL
DOE PROJECT NO. P00135-06
EWA OAHU HAWAII

SECTORS "H" & "J" FLOOR PLANS
NEIGHBORHOOD 2

THIS WORK WAS PREPARED BY ME OR UNDER MY SUPERVISION AND CONSTRUCTION OF THIS PROJECT WILL BE UNDER MY OBSERVATION.
EXPIRATION DATE:

MITSUNAGA & ASSOCIATES, INC.

MITSUNAGA & ASSOCIATES, INC.		DRAWING NO. A-4.7
DESIGNED BY: SW	CHECKED BY: SW	
DRAWN BY: CAD	APPROVED BY: SW	DATE: NOVEMBER 1, 2007
SCALE: AS SHOWN		SHEET ___ OF ___ SHTS

FILE _____ DRAWER _____ FOLDER _____

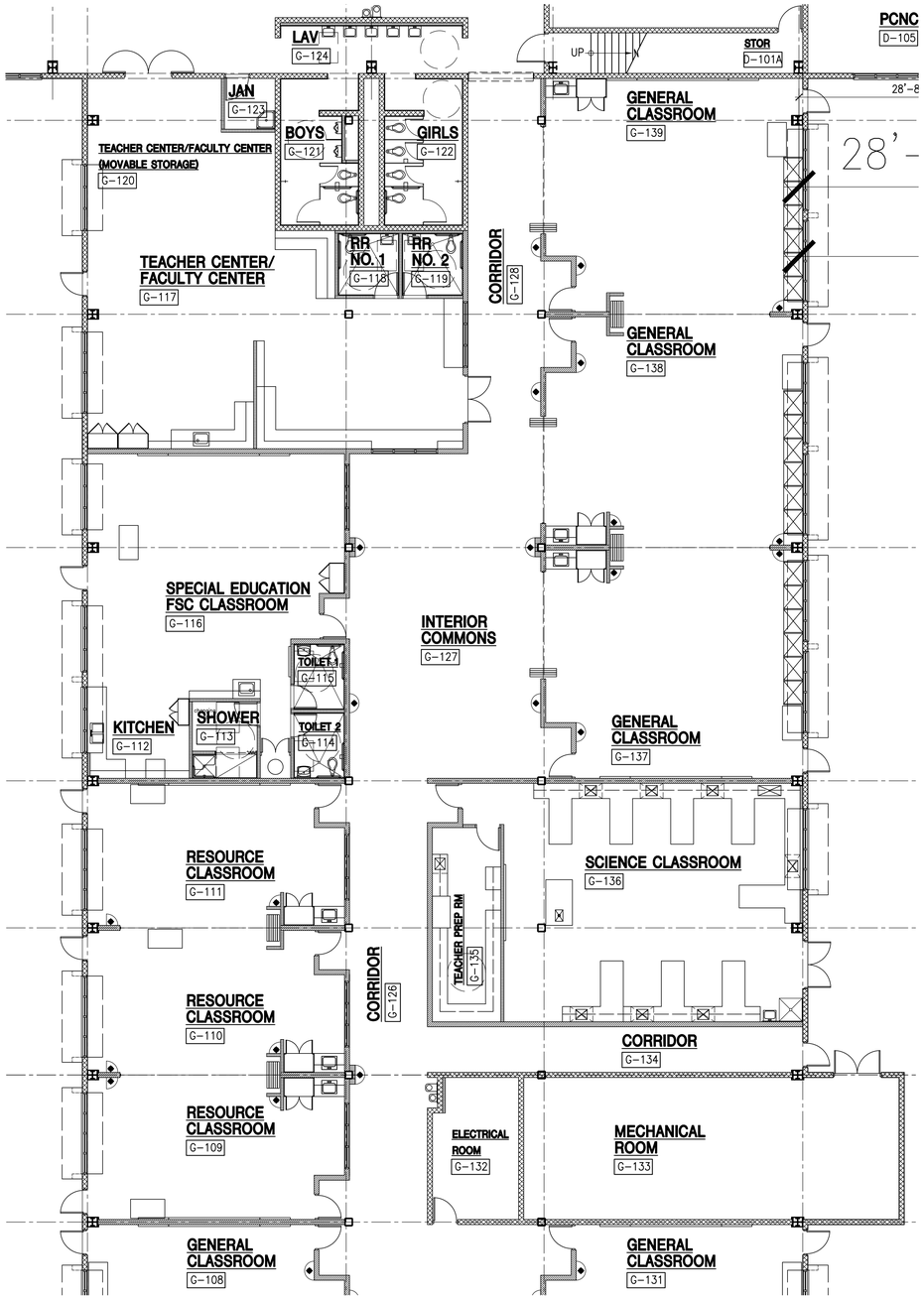

SECTOR "K" - NEIGHBORHOOD 3

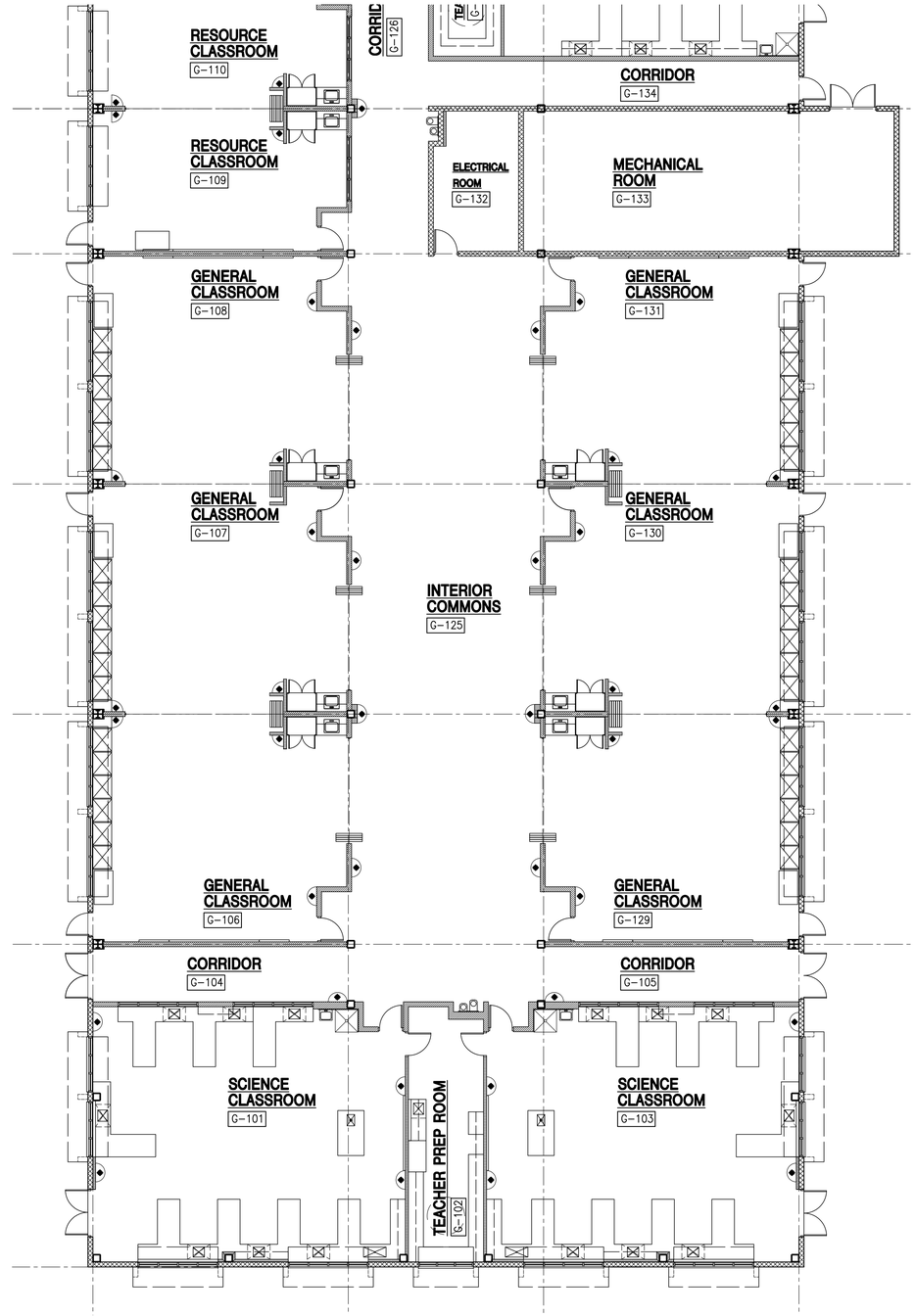

SECTOR "L" - NEIGHBORHOOD 3

GENERAL NOTES :

1) FOR INTERIOR ELEVATIONS SEE SHEETS A-8.1 THRU A-8.__

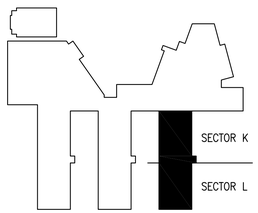

KEY PLAN
NOT TO SCALE

A
A-4.8

SECTORS "K" & "L" FLOOR PLANS - NEIGHBORHOOD 3

SCALE : 1/8" = 1'-0"

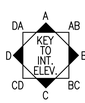

ELEVATION KEY

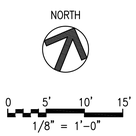

GRAPHIC SCALE

REVISION NO.	SYM.	DESCRIPTION	SHT OF	DATE

FACILITIES DEVELOPMENT BRANCH
DEPARTMENT OF EDUCATION
STATE OF HAWAII

EWA MAKAI MIDDLE SCHOOL
DOE PROJECT NO. P00135-06
EWA OAHU HAWAII

SECTORS "K" & "L" FLOOR PLANS
NEIGHBORHOOD 3

THIS WORK WAS PREPARED BY ME OR UNDER MY SUPERVISION AND CONSTRUCTION OF THIS PROJECT WILL BE UNDER MY OBSERVATION.
EXPIRATION DATE:

MITSUNAGA & ASSOCIATES, INC.

MITSUNAGA & ASSOCIATES, INC.		DRAWING NO.
DESIGNED BY: SW	CHECKED BY: SW	A-4.8
DRAWN BY: CAD	APPROVED BY: SW	DATE: NOVEMBER 1, 2007
SCALE: AS SHOWN		SHEET ___ OF ___ SHTS

FILE _____ DRAWER _____ FOLDER _____

TRAFFIC IMPACT ASSESSMENT REPORT

FOR

‘EWA MAKAI MIDDLE SCHOOL PROJECT

‘EWA, O‘AHU, HAWAI‘I

JULY 2008

PREPARED FOR:

Mitsunaga and Associates, Inc.
747 Amana Street, Suite 216
Honolulu, Hawai‘i 96814

PREPARED BY:

SSFM INTERNATIONAL

SSFM International, Inc.
501 Sumner Street, Suite 620
Honolulu, Hawai‘i 96817

TABLE OF CONTENTS

CHAPTER		PAGE
CHAPTER 1	**PROJECT DESCRIPTION**	**1**
1.1	**PROJECT LOCATION AND DESCRIPTION**	1
1.2	**PURPOSE OF THE STUDY**	3
1.2	**STUDY METHODOLOGY**	4
CHAPTER 2	**EXISTING CONDITIONS**	**6**
2.1	**SURROUNDING LAND USES**	6
2.2	**EXISTING ROADWAYS**	6
2.3	**EXISTING TRAFFIC VOLUMES**	9
2.4	**EXISTING LEVEL OF SERVICE ANALYSIS**	9
CHAPTER 3	**TRAFFIC FORECASTS**	**12**
3.1	**BACKGROUND TRAFFIC FORECASTS**	12
3.2	**NEW MIDDLE SCHOOL TRAFFIC GENERATION**	14
3.3	**TRAFFIC ADDED TO STREET NETWORK**	16
3.4	**TRAFFIC VOLUMES WITH MIDDLE SCHOOL IN PLACE IN 2010**	16
3.5	**FUTURE TRAFFIC SIGNALS**	16
CHAPTER 4	**ANALYSIS OF FUTURE CONDITIONS**	**24**
4.1	**LEVEL OF SERVICE (LOS) ANALYSIS**	24
4.2	**ROAD DESIGN CONSIDERATIONS**	24
CHAPTER 5	**CONCLUSIONS AND RECOMMENDATIONS**	**28**
5.1	**CONCLUSIONS**	28
5.2	**RECOMMENDATIONS**	28

APPENDICES

Appendix A	**Site Photographs**
Appendix B	**Traffic Signal Plan and Timing Information**
Appendix C	**Manual Traffic Count Data**
Appendix D	**Synchro and Sim Traffic Data Sheets**

LISTING OF FIGURES

FIGURE		PAGE
Figure 1	Project Location Map	1
Figure 2	Conceptual Site Plan	2
Figure 3	Conceptual Intersection Study Network	3
Figure 4	Project Vicinity Map	7
Figure 5	Existing Traffic Volumes for AM and PM Peak Hours	11
Figure 6	Predicted Added Traffic from 'Ewa by Gentry in 2010	15
Figure 7	Predicted Added Traffic from Ocean Point in 2010	16
Figure 8	Predicted Added Traffic Without the New Middle School in 2010	17
Figure 9	LOS for Future No Build Conditions for AM and PM Peak Hours	20
Figure 10	Percentage (%) Trip Distribution for New School Trips	21
Figure 11	Predicted Added Traffic from New Middle School 2010	22
Figure 12	Total Predicted Traffic from New Middle School in 2010 (includes Background Traffic)	23
Figure 13	LOS for 2010 with School in Place for AM and PM Peak Hours	27

LISTING OF TABLES

TABLES		PAGE
Table 1	Criteria for Levels of Service (LOS) for Intersections	5
Table 2	Existing Conditions for AM and PM Peak Hours	10
Table 3	Build-Out Schedule for Surrounding Developments	12
Table 4	Future 2010 Without School for AM and PM Peak Hours	13-14
Table 5	Trip Generation Summary for 'Ewa Makai Middle School	18
Table 6	Future Year Contitions (2010) with School - AM and PM Peak Hours With Traffic Signals In Place	24-25
Table 7	Intersection Movements with Poor LOS in the Year 2010 with School	26
Table 8	Future 2010 with School for AM and PM Peak Hours Without a Traffic Signal In Place	26

CHAPTER 1
PROJECT DESCRIPTION

1.1 PROJECT LOCATION AND DESCRIPTION

The 'Ewa Makai Middle School will be a new education facility (middle school) to be located off Kapolei Parkway between Coral Creek Golf Course and the Ocean Point Subdivision. The location is shown in Figure 1. The new middle school will be designed to accommodate up to 1050 students with 100 faculty and staff. The proposed site plan is presented in Figure 2. The site plan and information about the expected number of students and faculty and other characteristics relevant to traffic are based on the report on the design charrettes for the school, which were held in 2005.

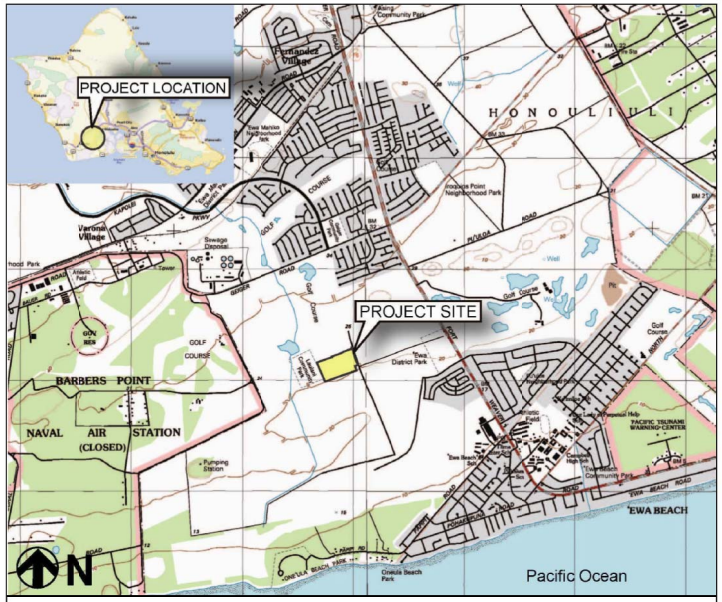

Figure 1. Project Location Map

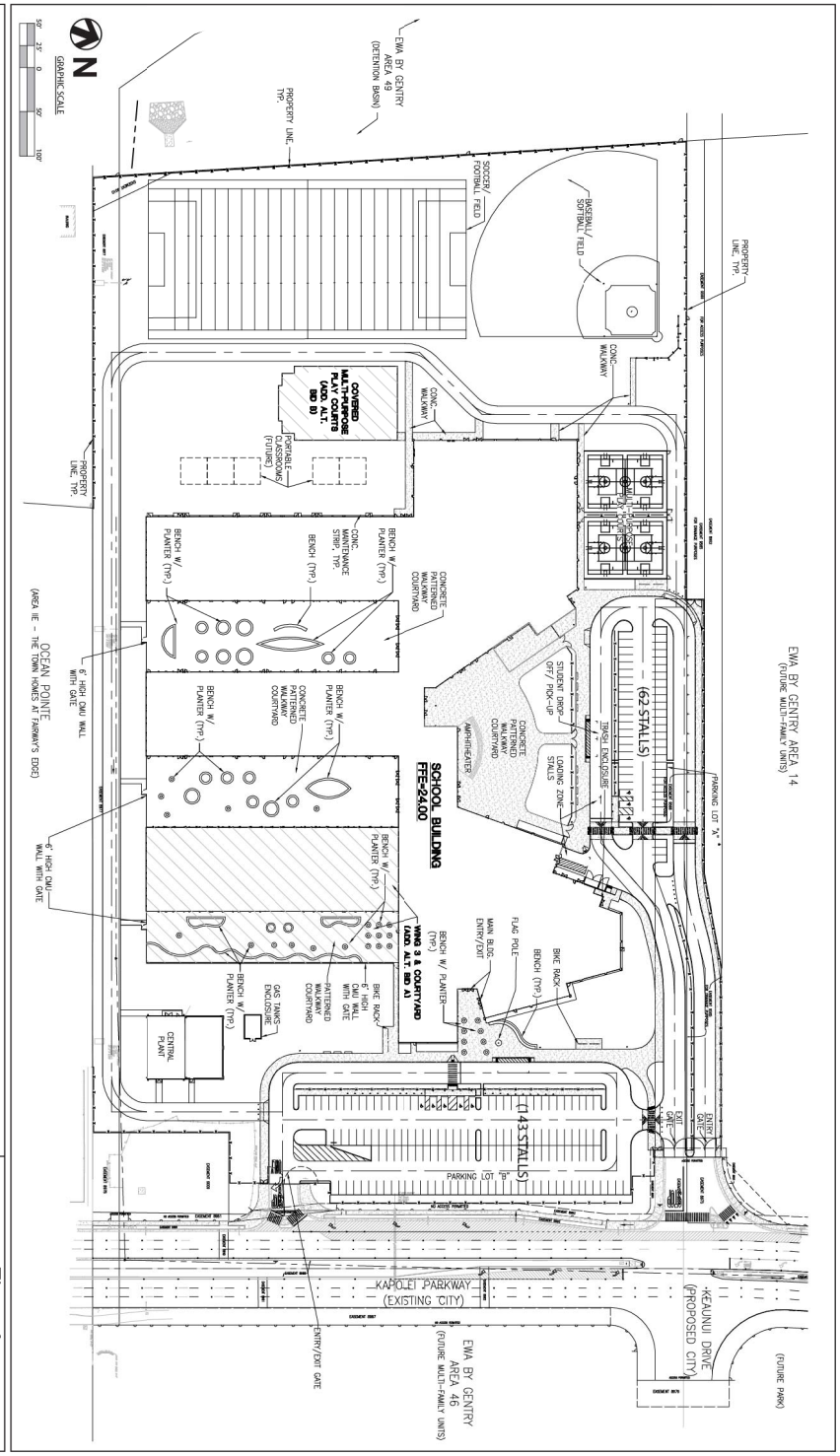

'Ewa Makai Middle School
Traffic Impact Assessment Report

Chapter 1
Project Description

1.2 PURPOSE OF THE STUDY

The purpose of this study is to assess the impact of vehicles entering and leaving the school onto the roadway network. The major point of access at the site for students is off of a new road that aligns with Keaunui Drive on the west side of Kapolei Parkway. A second point of access will be for faculty and staff and for the buses that will deliver and pick up students. The second access is off Kapolei Parkway approximately 400 feet south of the intersection and it will be designated as a right-in/right-out only (RIRO) driveway. A conceptualized view of the intersection study network is provided in Figure 3.

The roadway facilities included under this study include: 1) Kapolei Parkway, 2) Geiger Road, 3) Keaunui Street, 4) Kaioli Street, 5) Keoneula Boulevard, and 6) Kaileolea Street as shown on Figure 3. The intersections associated with these roadways are listed below.

Impacts are predicted on traffic flow at the following intersections:

- Kapolei Parkway at Geiger Road
- Kapolei Parkway at Keaunui Street
- Kapolei Parkway at the secondary school access (RIRO) to be located about 400 feet to the south of the major school access (future intersection)
- Kapolei Parkway at Kaioli Street
- Kapolei Parkway at Keoneula Boulevard
- Keoneula Boulevard at Kaileolea Street (near Ocean Point Elementary School and fire station site)

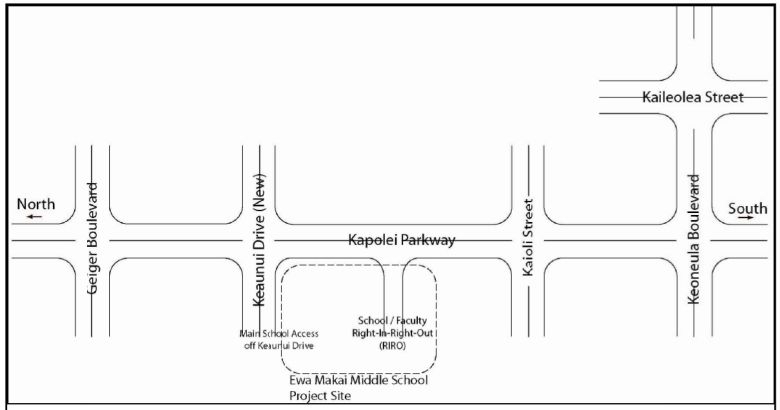

Figure 3 – Conceptual Intersection Study Network

1.3 STUDY METHODOLOGY

The study methodology follows the recommended practice and guidelines described in the Institute of Transportation Engineering (ITE) *Traffic Access and Impact Studies for Site Development* (1991). The ITE guidelines are accepted by the Hawai'i Department of Transportation (HDOT) and the City and County of Honolulu as the preferred method for preparing traffic studies for land development projects.

The approach consisted of assessing existing conditions, predicting background traffic growth, and assessing traffic conditions in the year of opening of the school. It was determined that the school should be fully built and occupied by the year 2010. Therefore, this study made assessments of current traffic conditions for the year 2007 and, future conditions in the year 2010, with and without the school in place. The major tasks included the following:

1. Conducted field survey and traffic counts at four (4) of the six (6) study network intersections. At the time when traffic counts were conducted, Keaunui Drive and the second school access intersections were not open to traffic.
2. Developed trip generation characteristics for the proposed project for the study year 2010.
3. Forecast future traffic conditions without the project for the study year 2010.
4. Forecast future traffic conditions with the project, and evaluated impacts on traffic conditions.
5. Identified mitigation measures and other recommendations to address impacts on traffic conditions.
6. Forecasted traffic volumes resulting from the generation of traffic created by the school were added to existing plus background growth to derive future traffic volumes with the site fully developed.

The Highway Capacity Manual (HCM) 2000 Edition was used to assess traffic conditions standards and Level of Service (LOS) for the intersections in the study area. The Synchro software was used to apply the HCM methods.

Standards

The primary measure of traffic flow quality for the study used the definition of Level of Service (LOS) found in the HCM. LOS at intersections measures the quality of traffic flow to the delay time experienced by drivers. The HCM provides guidance on the use of the concept of level of service for streets and intersections. A tiered system has been established to describe traffic flow and congestion as related to observed and measured or predicted operational values. For intersections, the measure is stopped time delay. The following figure provides the HCM criteria for LOS for intersections. As noted, the LOS varies from "A' to "F", with the quality of traffic service declining as the levels move from "A" towards "F". With declining LOS, the ability to travel at the desired speed is inhibited by

other vehicles either adjacent, opposite, or in front of a driver.

Generally, in urban areas and growing rural areas transitioning to urban areas, it is expected that LOS D will be acceptable in the morning and afternoon peak hours. Traffic movements with LOS E or worse would need to be reviewed to determine if any changes or improvements could be made to improve the LOS to an acceptable level. LOS F represents an unacceptable condition.

Table 1 indicates LOS and the thresholds of delay for signalized and non-signalized intersections:

Table 1. Criteria for Levels of Service for Intersections[1]

Level of Service	Signalized Intersections	Non-signalized Intersections
	Vehicle Delay (seconds)	Vehicle Delay (Seconds)
A	< 10	< 10
B	10-20	10-15
C	20-35	15-25
D	35-55	25-35
E	55-80	35-50
F	> 80	> 50

Level of service is graded from A to F to indicate increasing congestion, longer delays and greater limitation in mobility to drivers. Level of service D is acceptable for non-signalized intersections. LOS is C if the average delay is less than 25 seconds. Level of service E is generally considered to be "capacity." Level of service F indicates a condition where capacity has been exceeded and long queues develop. The peak hour factors for each movement along with estimated truck percentages are available in Appendix C.

The prediction of project generated traffic was made using the guidelines of the ITE in its publications *Trip Generation, 7th Edition*, and the *Trip Generation Handbook*. However, judgment needs to be applied to ITE school trip generation rates due to the variability in school access methods across the country. Some schools are positioned to encourage walking and some schools, particularly private schools, have very high rates of children being dropped off by parents. Still other schools may have very high rates of buses delivering students.

The National Cooperative Highway Research Program (NCHRP) Report 279 provided criteria for the analysis of the need for a right turn lane given design hour or predicted traffic volumes. The criteria applied to both school access points were used to consider the need for additional road design considerations.

[1] From Highway Capacity Manual, 2000 Edition, Transportation Research Board.

CHAPTER 2
EXISTING CONDITIONS

Field surveys were conducted of roadway facilities surrounding the 'Ewa Makai Middle School project site along with surrounding land uses to assess and evaluate existing traffic conditions in the area. These conditions were used as a basis for estimating potential traffic impacts from the project. This chapter discusses existing conditions that including land uses, roadway facilities, and traffic conditions.

The 'Ewa Makai Middle School project site of about 18 acres is identified by Tax Map Key 9-1-069: 005 (Lot 90003). This property generally consists of a rectangular shaped parcel bordered by Kapolei Parkway on the east and undeveloped agricultural lands on the west. The parcel is located within the Urban District of the State Land Use District. The property is zoned A-1, Low Density Apartment District under the City's zoning. The property is not located within the City's Special Management Area.

The property is currently undeveloped and was formerly used for agriculture. The topography of the site is generally flat. Photos of this project site are included in the Appendix A.

2.1 SURROUNDING LAND USES

The new school site is situated within the planned development community called 'Ewa by Gentry – Makai. 'Ewa Makai is an extension of the 'Ewa by Gentry Development that has been underway in the region for the past 15 years. 'Ewa Makai includes up to 550 single family and 1329 multi-family residential units, light industrial uses, community recreational center, middle school, church sites, and two neighborhood park sites. A portion of the homes planned for 'Ewa Makai have already been constructed and are occupied. Additionally, several golf courses and neighborhood parks can be found in the vicinity of the project site. Figure 4 shows the proximity surrounding land uses to the school site.

2.2 EXISTING ROADWAYS

The 'Ewa Makai Middle School project site is located on Kapolei Parkway about 4,000 feet south of its intersection with Geiger Road. It is located in the western section of 'Ewa, a rapidly growing area with several new residential and commercial developments underway. Kapolei Parkway has a cross-section of five lanes in the vicinity of the project site.

The intersection of Kapolei Parkway at Geiger Road is controlled by an actuated traffic signal. The intersection of Keoneula Boulevard at Kailoelea Drive is also controlled by an actuated traffic signal. A copy of the traffic signal plan and timing information for these intersections are provided in Appendix B.

PROJECT VICINITY MAP

'Ewa Makai Middle School
State of Hawai'i, Department of Education

Figure 4

Source: Hawai'i Aviation, Jan 2008 (Aerial)

Description of Existing Major Roadway Network

Kapolei Parkway is the major roadway providing vehicular access to the 'Ewa Makai Middle School project site. Kapolei Parkway is City owned and maintained, and is a two-way collector street generally running in a mauka-makai (north-south) direction parallel to Fort Weaver Road. Kapolei Parkway serves as one of the major roadways providing vehicular access to the communities of 'Ewa and Kapolei. As shown on the location map, this roadway primarily serves residential areas within the 'Ewa communities.

Kapolei Parkway is a four- to six-lane road, two-directional with a median. However, immediately adjacent to the project site Kapolei Parkway becomes five-lanes wide, with three-lanes northbound and two-lanes southbound. South (makai) of the Keoneula Boulevard intersection, the road is striped for four-lanes (two each direction) and eventually decreases to two-lanes (one lane each direction).

Kapolei Parkway has a posted speed limit of 30 miles per hour (mph) in the area of the project site. Crosswalks for pedestrians are provided south of the project site at the intersection of Keoneula Blvd. There is no on-street parking permitted along the roadway fronting the project site.

Description of Existing Intersections

1. Kapolei Parkway and Geiger Road: A signalized four-leg intersection. Separate left-turn storage lanes are provided on Kapolei Parkway for both westbound (to Kapolei) and eastbound (to Fort Weaver Road) vehicles. Separate right-turn lanes for westbound and eastbound vehicles are also provided on Kapolei Parkway. Heading westbound, Geiger Road consists of three lanes with a separate left-turn storage lane and a right-turn lane for vehicles turning southbound and northbound on Kapolei Parkway, respectively.
2. Kapolei Parkway and Keaunui Drive (new): A non-signalized, three-leg T-intersection. A separate left-turn storage lane is provided along Kapolei Avenue for southbound (to makai) vehicles turning onto Keaunui Drive. The Keaunui Drive leg to this intersection consists of a separate left-turn lane and a right-turn, yield-controlled lane.
3. Kapolei Parkway and Kaioli Street: A non-signalized, four-leg intersection. Access from Kaioli Street onto Kapolei Parkway is controlled via two-way stop-sign (only on Kaioli Street).
4. Kapolei Parkway and Keoneula Boulevard: A non-signalized, four-leg intersection. Shared through, right-turn and left-turn lanes are provided along Keoneula Boulevard when approaching Kapolei Parkway. In the northbound (mauka) direction on Kapolei Parkway, there is one lane approaching the intersection which turns into three lanes after crossing Keoneula Boulevard. In the southbound (makai) direction on Kapolei Parkway, there are separate right-turn and left-turn storage lanes and two through lanes.
5. Keoneula Boulevard and Kaileolea Street: A signalized, four-leg intersection. The intersection of Kaoli Street with Kapolei parkway is non-signalized. Vehicles entering onto Kapolei Parkway in both mauka and makai directions are stop-sign controlled.

2.3 EXISTING TRAFFIC VOLUMES

Manual traffic counts were taken at four (4) study network intersections on May 24, 2007 during the morning peak period between 6:00 and 8:30 a.m., and during the afternoon peak period between 3:00 and 6:00 p.m. Observations of the general traffic conditions were also made. There were no accidents or unusual traffic patterns that were observed during the count period.

Traffic volume data at these intersections were manually collected using an electronic traffic data collector. The counts showed that the morning peak hour occurred from 7:00 to 8:00 a.m., and the afternoon peak hour occurred from 3:00 to 4:00 p.m. Results of the traffic count data is provided in Appendix C of this document. Figure 5 shows the current peak hour traffic volumes for the 7:00 to 8:00 a.m. morning peak hour and the 3:00 to 4:00 p.m. afternoon peak hour. Since the upstream and downstream volumes are relatively close in comparing adjacent intersections, no adjustments were made to the volumes.

Using the traffic data collection results, the peak period for morning traffic was shown to last from 6:00 to 8:00 a.m. The peak period for the afternoon traffic was shown to last from 3:00 to 6:00 p.m. The traffic data the afternoon peak period to be more spread out when compared to the morning peak period.

2.4 EXISTING LEVEL OF SERVICE ANALYSIS

The Highway Capacity Manual (HCM) was used to assess the congestion and LOS of the study intersections for the existing conditions using the Synchro software and its SimTraffic simulation module. The results of the Synchro/HCM analysis are shown in Table 2 and Figure 5. The printouts from Synchro and SimTraffic for the existing conditions analysis are provided in Appendix D.

Most traffic movements for the morning and afternoon peak hours have LOS D or better. For an urban area such as the Honolulu and 'Ewa Beach areas, LOS D is considered acceptable for peak hours. As seen in Table 2 (on next page) and Figure 5, only two (2) traffic movements have significant existing congestion and delays greater than LOS D. The intersections are listed below:

1. Kapolei Parkway and Geiger Road: The northbound left (morning) and westbound left (afternoon) movements were calculated to have LOS F (v/c > 1) and LOS E (v/c = 0.81), respectively.
2. Kapolei Parkway and Keoneula Boulevard: The eastbound left (morning) and eastbound left (afternoon) movements were calculated to have LOS F (v/c > 1) and LOS E (v/c only 0.07), respectively.

The current poor LOS for the northbound and westbound left turns at the intersection of Kapolei Parkway at Geiger Road is related to the operation of the traffic signal. The poor LOS for the eastbound left turn from Keoneula Boulevard at Kapolei Parkway, a non-signalized intersection is due to the difficulty in getting gaps in traffic at the stop sign.

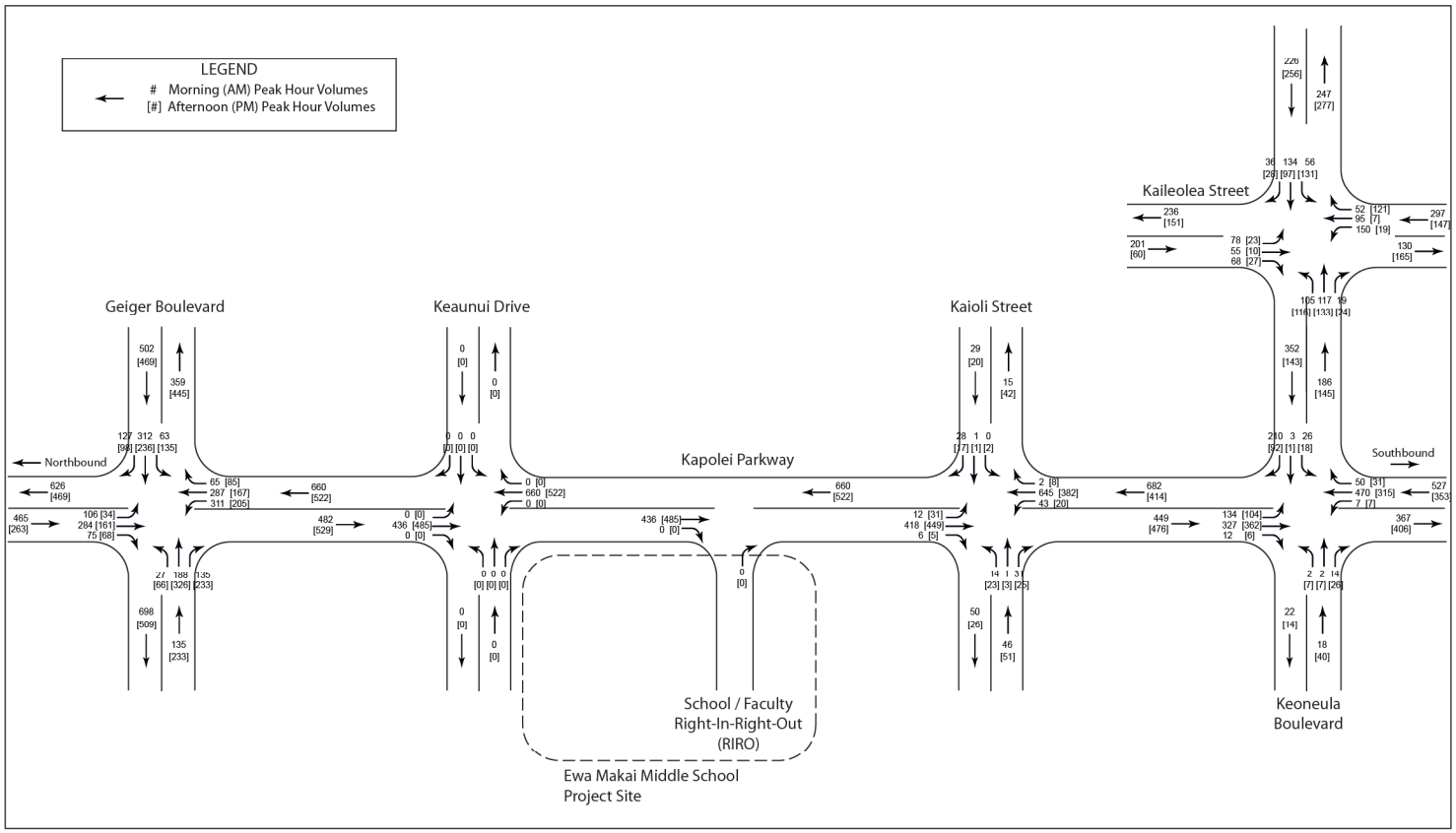

EXISTING TRAFFIC VOLUMES FOR MORNING AND AFTERNOON PEAK HOURS

Figure 5

Ewa Makai Middle School
State of Hawaii, Department of Education

Source:
SSFM International, Inc.
Traffic Counts (2007)

During the data collection period, neither of the intersections experienced extensive queues or congestion lasting more than a single cycle in the case of Kapolei Parkway and Geiger Road.

Table 2. LOS and Other Measures for Existing Conditions for A.M. and P.M. Peak Hours

Intersection	Movement	A.M. Peak Hour Delay	A.M. Peak Hour v/c	A.M. Peak Hour LOS	P.M. Peak hour Delay	P.M. Peak hour v/c	P.M. Peak hour LOS
Kapolei Parkway at Geiger Road	Northbound Left turn	> 80	> 1	F	37.4	0.69	D
	Northbound Thru/right	25.9	0.55	C	29.1	0.46	C
	Southbound Left turn	44.1	0.63	D	27.5	0.27	C
	Southbound Thru/right	29.7	0.47	C	36.6	0.42	D
	Eastbound Left	41.9	0.33	D	41.8	0.55	D
	Eastbound Thru/right	28	0.65	C	27.7	0.81	C
	Westbound Left	45.3	0.57	D	68.6	0.81	E
	Westbound Thru/right	35	0.82	C	18.4	0.53	B
	Total	40.5	0.73	D	30.8	0.7	C
Kapolei Parkway at Kaioli Street	Eastbound Left	27.9	0.09	D	25.3	0.14	D
	Eastbound Thru/right	10.7	0.06	B	12	0.06	B
	Westbound Left	0	0	A	22.3	0.01	C
	Westbound Thru/right	11.9	0.06	B	10.7	0.03	B
	Northbound Left turn	8.5	0.05	A	8.6	0.02	A
	Northbound Thru/right	0	0.29	A	0	0.1	A
	Southbound Left turn	9.3	0.02	A	8.4	0.03	A
	Southbound Thru/right	0	0.19	A	0	0.21	A
	Total	1.3	0.31	A	1.6	0.25	A
Kapolei Parkway at Keoneula Boulevard	Eastbound Left	> 50	> 1	F	37	0.07	E
	Eastbound Thru/right	22.9	0.02	C	23.6	0.03	C
	Westbound Left	23.1	0.13	C	23.8	0.1	C
	Westbound Thru/right	23.1	0.57	C	22.8	0.17	C
	Northbound Left turn	8.2	0.01	A	8.2	0.01	A
	Northbound Thru/right	0	0.37	A	0	0.23	A
	Southbound Left turn	9.6	0.17	A	8.4	0.1	A
	Southbound Thru/right	0	0.15	A	0	0.16	A
	Total	> 50	0.61	B	3.2	0.41	A
Keonula Boulevard at Kaileolea Street	Eastbound Left	6.3	0.31	A	3.7	0.03	A
	Eastbound Thru/right	5.5	0.13	A	3.8	0.1	A
	Westbound Left	5.4	0.1	A	4.3	0.24	A
	Westbound Thru/right	5.6	0.18	A	3.8	0.08	A
	Northbound Left turn	10.7	0.47	B	12.4	0.1	B
	Northbound Thru/right	10.5	0.47	B	14.1	0.42	B
	Southbound Left turn	10.9	0.49	B	12.5	0.03	B
	Southbound Thru/right	9.3	0.21	A	12.4	0.09	B
	Total	8.2	0.38	A	7	0.29	A

CHAPTER 3
TRAFFIC FORECASTS

3.1 BACKGROUND TRAFFIC FORECAST

Daily traffic volumes were not available from HDOT for any count stations located nearby. However, two traffic studies done in previous years for two major developments in the nearby 'Ewa Beach area were available and information from these two studies was used in the preparation of this report. The two major developments are: 'Ewa By Gentry project and the Ocean Pointe project.

The 'Ewa By Gentry project is expected to have 1879 residential units, 30 acres of light industrial uses, a community recreational center, two churches and two neighborhood parks and be completed in the year 2010. The traffic study for this project was completed by Parsons Brinckerhoff in 2003. The Ocean Pointe development will have 4850 residential units, a marina, visitor accommodations, retail shops, 20 acres of parks and a golf course. It is expected the full project would be completed in the year 2014. The traffic study for the Ocean Point project was completed by Pacific Planning and Engineering, Inc. in 2001.

The anticipated build out schedule for these two projects is shown in Table 3. There are no other known major projects in the area that would affect the future traffic volumes in the area. Thus, the traffic from these projects should encompass the majority of any new traffic added to the street system in the area. The 'Ewa Makai Middle School is expected to be completed and occupied in late 2010.

In the years between 2007 and 2010, 46% of the 'Ewa By Gentry and 25% of the Ocean Point projects will be completed and occupied. Thus, the predicted traffic volumes from the two traffic impact studies were considered appropriate for estimating the future traffic added to the street system in proportion to the expected percentage completion in the year 2010.

Table 3. Build-Out Schedule for Surrounding Developments

Project	'Ewa By Gentry	'Ewa By Gentry	Ocean Point	Ocean Point
Year	Total Units	Units Built by 2010	Total Units	Units Built by 2010
2002	—	—	—	—
2003	—	—	—	—
2004	—	—	1295	—
2005	90	—	261	—
2006	192	—	360	—
2007	227	227	400	400
2008	270	270	400	400
2009	246	246	400	400
2010	240	—	—	—
2011	123	—	—	—
2012	90	—	—	—
2013	87	—	—	—
2014	60	—	—	—
2015	90	—	—	—
2016	70	—	—	—
2017	80	—	—	—
Total	1865	743	4850	1200
By 2010	1583	46%	1200	25%

The traffic volumes were then factored based on the predicted 2010 build schedules and upstream and downstream turning percentages to forecast added trips for each study intersection for the morning and afternoon peak hours. Figures 6 and 7 show trips predicted to be added to the street system in the year 2010, which are included at the end of this Chapter.

Figure 8 and Table 4 show the total trips added to the street system in 2010 without the middle school project. Nine (9) intersection movements each in A.M. and P.M. are predicted to have poor LOS F in the year 2010 with the 'Ewa By Gentry and Ocean Point projects in place without the new 'Ewa Beach Middle School. This represents the background against which the impacts of the new school traffic generation should be judged.

Table 4. LOS and Other Measures for Future 2010 Without School for A.M. and P.M. Peak Hours

		A.M. Peak Hour			P.M. Peak hour		
Intersection	Movement	Delay (Sec.)	v/c Ratio	LOS	Delay (Sec.)	v/c Ratio	LOS
Kapolei Parkway at Geiger Road	Northbound Left turn	> 80	> 1	F	> 80	> 1	F
	Northbound Thru/right	76.9	> 1	E	> 80	> 1	F
	Southbound Left turn	> 80	0.99	F	74.4	0.75	E
	Southbound Thru/right	33.7	0.56	C	40.3	0.71	D
	Eastbound Left	59.2	0.59	E	51.6	0.59	D
	Eastbound Thru/right	39.9	0.81	F	> 80	> 1	F
	Westbound Left	> 80	0.86	F	> 80	> 1	F
	Westbound Thru/right	41.2	0.84	D	25.1	0.62	C
	Total	71.8	0.95	E	82.0	> 1	F
Kapolei Parkway at Kaioli Street*	Eastbound Left	96.0	.34	F	94.6	.44	F
	Eastbound Thru/right	14.4	.09	B	19.3	.11	C
	Westbound Left	0	0	A	48.6	.03	E
	Westbound Thru/right	18.1	.14	C	14.0	.05	B
	Northbound Left turn	9.5	.06	A	10.7	.04	B
	Northbound Thru/right	0	.53	A	0	.14	A
	Southbound Left turn	12.3	.03	B	9.3	.05	A
	Southbound Thru/right	0	.29	A	0	.41	A
	Total	1.7	.47	A	2.3	.39	A
Kapolei Parkway at Keoneula Boulevard	Eastbound Left	> 50	> 1	F	> 50	> 1	F
	Eastbound Thru/right	> 50	> 1	F	86.8	.64	F
	Westbound Left	> 50	> 1	F	31.4	.54	D
	Westbound Thru/right	> 50	> 1	F	> 50	> 1	F
	Northbound Left turn	8.8	.08	A	10.3	.09	B
	Northbound Thru/right	0	.58	A	0	.31	A

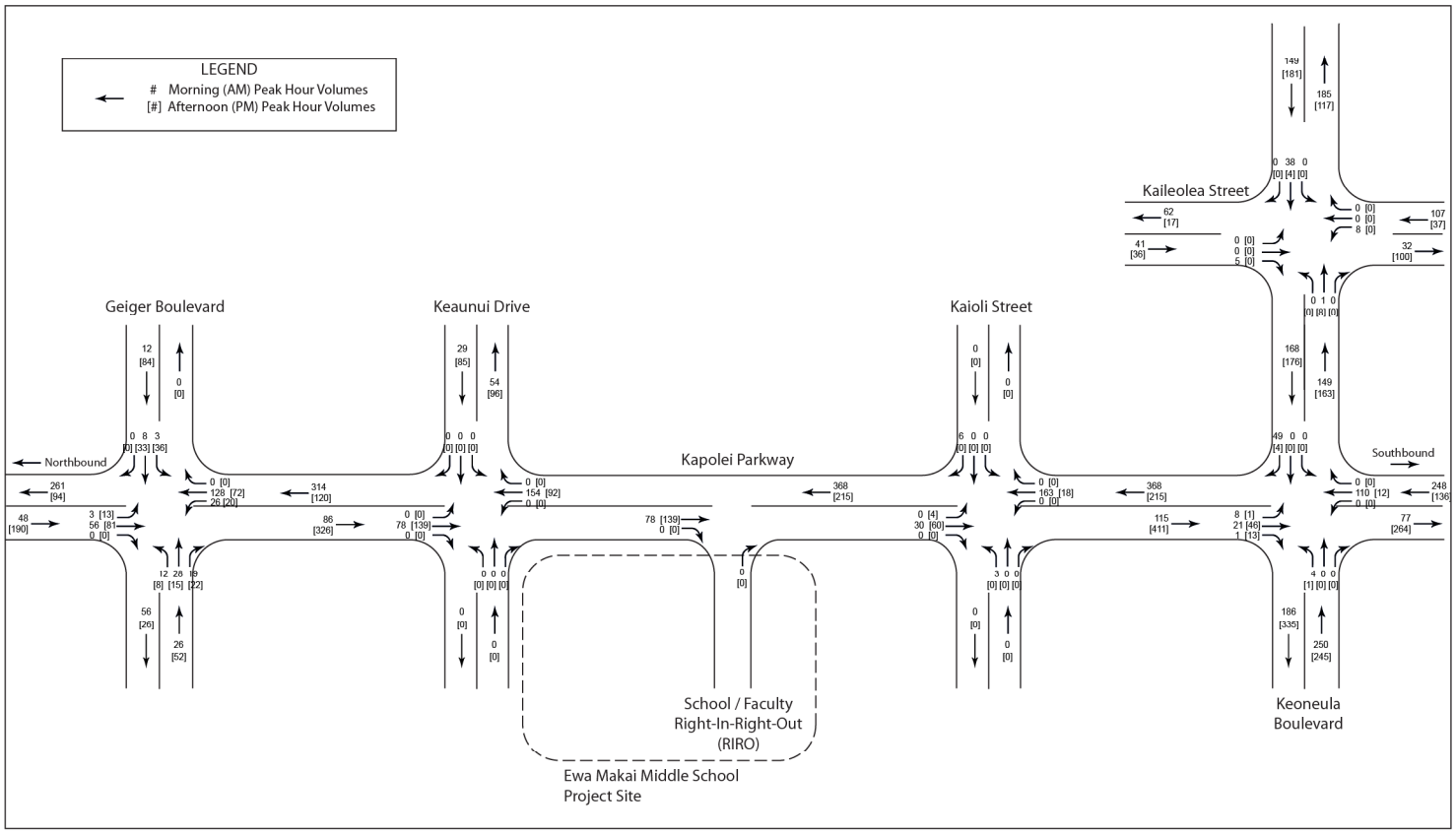

PREDICTED ADDED TRAFFIC FROM EWA BY GENTRY PROJECT IN 2010

Figure 6

Ewa Makai Middle School
State of Hawaii, Department of Education

Source:
SSFM International, Inc.
Parsons Brinkerhoff (TIAR, 2003)

Table 4 (cont.). LOS and Other Measures for Future 2010 Without School for A.M. and P.M. Peak Hours

Keoneula Boulevard at Kaileolea Street	Southbound Left turn	12.2	.29	B	9.5	.22	A
	Southbound Thru/right	0	.18	A	0	.28	A
	Total	> 50	> 1	F	> 50	.71	C
	Eastbound Left	12.9	.56	B	3.5	.05	A
	Eastbound Thru/right	10.5	.25	B	3.9	.22	A
	Westbound Left	9.0	.18	A	5.1	.42	A
	Westbound Thru/right	9.8	.36	A	3.8	.19	A
	Northbound Left turn	13.4	.57	B	17.9	.28	B
	Northbound Thru/right	12.1	.47	B	21.9	.60	C
	Southbound Left turn	13.4	.54	B	17.7	.26	B
	Southbound Thru/right	10.4	.20	B	17.3	.19	B
	Total	11.2	.57	B	8.2	.47	A
Kapolei Parkway at Keaunui Drive	Eastbound Left	0	0	A	0	0	A
	Eastbound Thru/right	0	0	A	0	0	A
	Westbound Left	51.5	.44	F	66.5	.73	F
	Westbound Thru/right	11.6	.01	B	11.3	.14	B
	Northbound Left turn	0	0	A	0	0	A
	Northbound Thru/right	0	.29	A	0	.19	A
	Southbound Left turn	13.1	.15	B	10.8	.16	B
	Southbound Thru/right	0	.25	A	0	.36	A
	Total	2.0	.43	A	5.1	.46	A
Kapolei Parkway at Second Access (RIRO Only)*	Eastbound Right	0	0	A	0	0	A
	Northbound Thru	0	.38	A	0	.22	A
	Southbound Thru/Right	0	.28	A	0	.40	A
	Total	0	.40	A	0	.32	A

* Stop sign controlled intersection. V/C ratio shown is ICU% from Synchro. Delay and V/C shown are the highest for each lane group calculated. See appendices for printouts and further discussion.

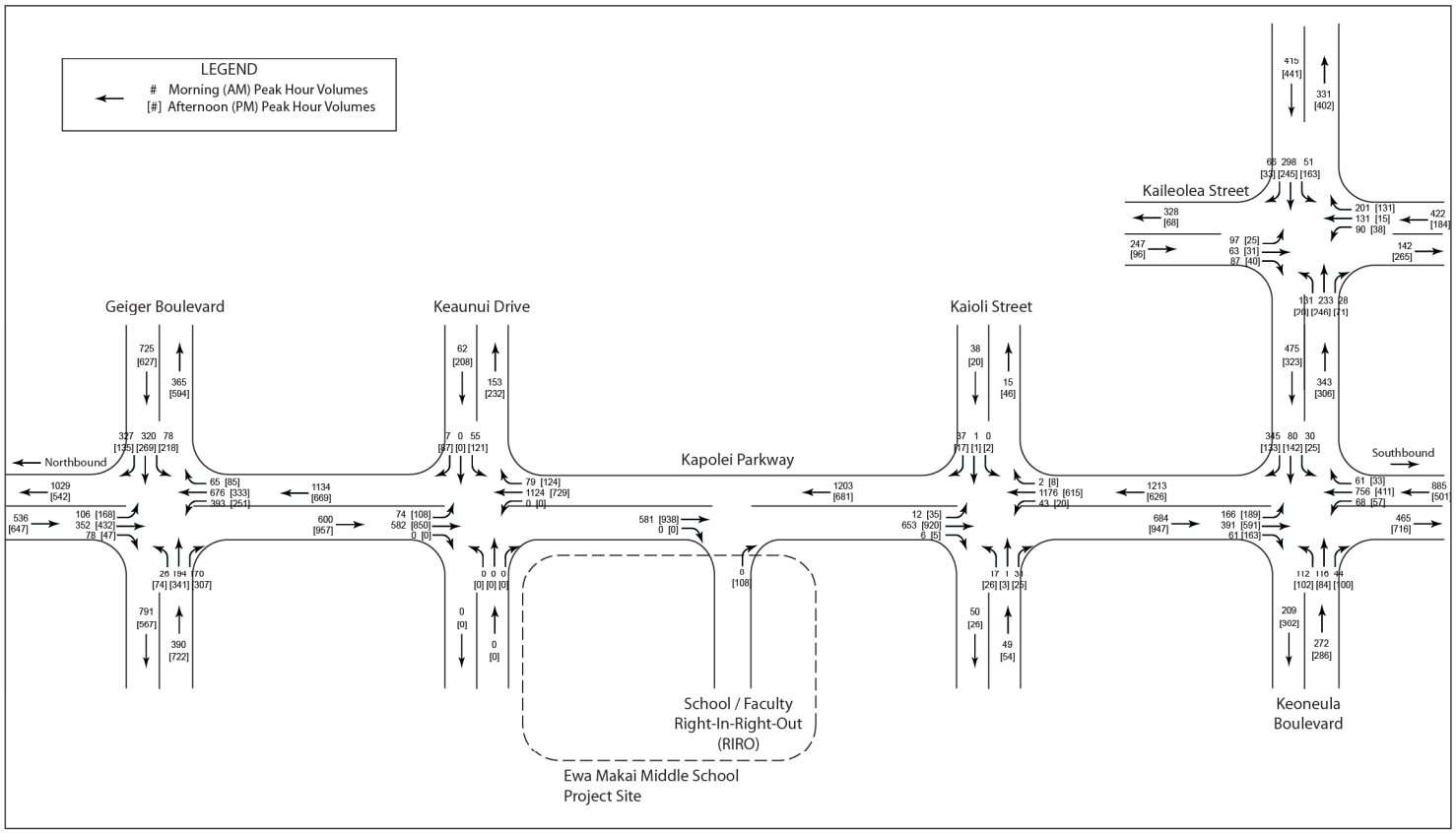

Predicted Traffic Without the New Middle School Project in 2010

Figure 8

Source:
SSFM International, Inc.

Ewa Makai Middle School
State of Hawaii, Department of Education

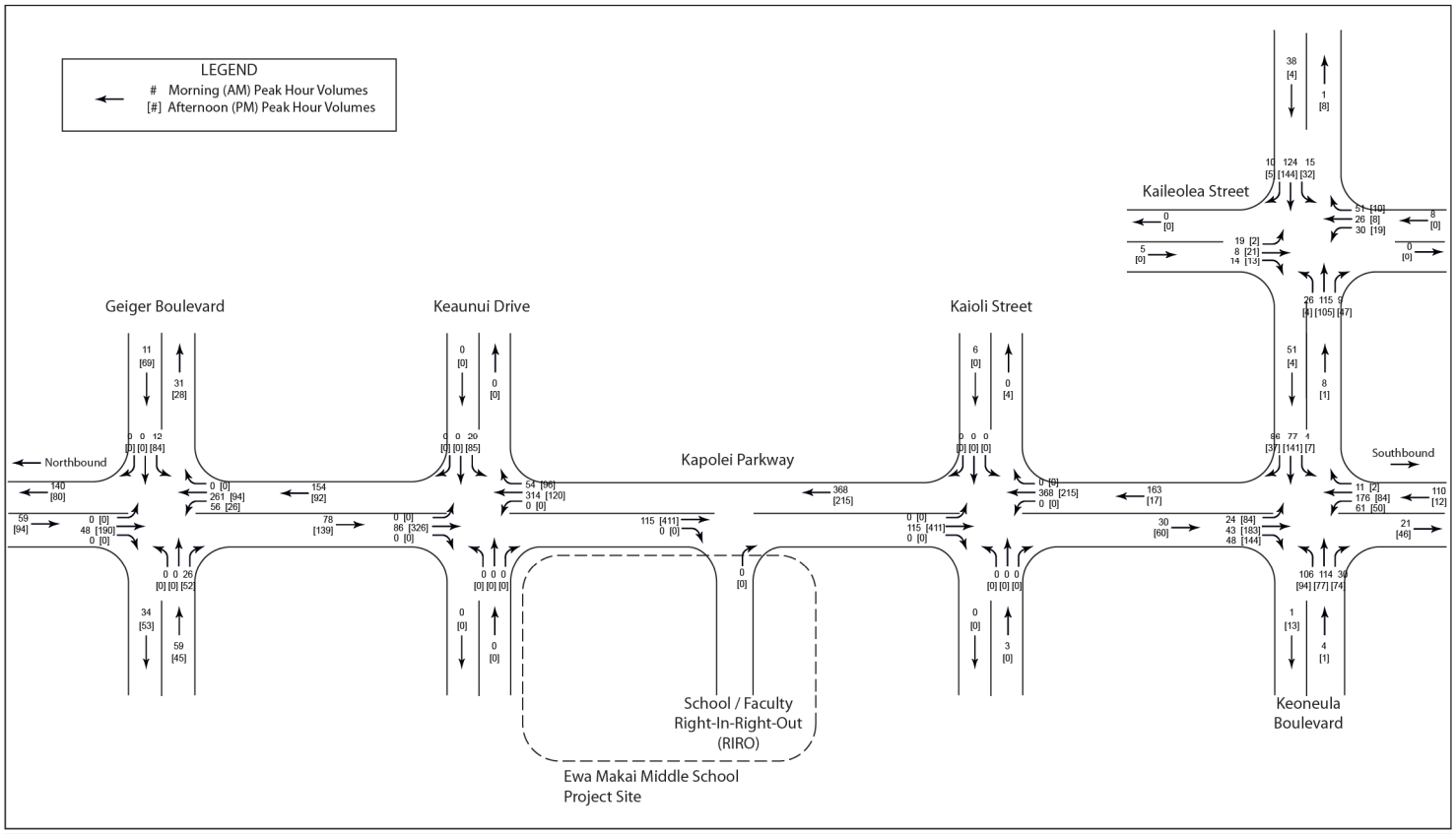

PREDICTED ADDED TRAFFIC FROM OCEAN POINTE PROJECT IN 2010

Figure 7

Source:
SSFM International, Inc.
Pacific Planning (TIAR)

Ewa Makai Middle School
State of Hawaii, Department of Education

3.2 NEW MIDDLE SCHOOL TRAFFIC GENERATION

The planning charrette for the school provided information on the expected number of students and faculty. Discussions were held with staff and the Principal working at nearby Ilima Intermediate School to assess the ratio of students walking to school verses those who are dropped off. Additionally, a one-day field survey was conducted at Ilima Intermediate School which identified and counted the numbers of students; walking to school, dropped of by a vehicle or other (such as riding a bicycle). Based on the discussions with Ilima Intermediate School faculty and data collected by the field survey, the following assumptions were made regarding development of the trip generation for the new middle school:

1. The morning peak hour will be between 7:00 and 8:00 a.m. While the exact bell times are not yet known, this should provide for a conservative estimate of future traffic conditions.
2. The afternoon peak hour will be between 3:00 and 4:00 p.m. While the exact bell times are not yet known, this should provide for a conservative estimate of future traffic conditions. It may be that the dismissal time will be before 3:00 p.m. but allowing the afternoon peak study hour to be for this hour will allow for a conservative review of future traffic conditions.
3. Approximately 30% of the students will walk to school. This is slightly below the percentage at the Ilima Intermediate School, but the location of the new middle school has fewer students located at a reasonable walk distance. It is likely that fewer students may walk.
4. Eight (8) school buses will drop off students. This assumption is based upon discussions held with the Transportation Officer for the State of Hawai'i, Department of Education, Leeward District Office
5. Approximately 20% of students (or 254 students) are dropped off in the morning.
6. Twenty of one hundred faculty and staff will park in the parking lot accessed from the major access point opposite the new connector to Fort Weaver Boulevard.
7. Eighty of one hundred faculty and staff will park in the faculty and bus parking lot accessed as a right-in/right-out only located to the south of the major access point.

Taking into account the above assumptions and factors, the following table of trip generation was developed (Table 5).

Table 5. Trip Generation Summary for 'Ewa Beach Middle School

	A.M Peak Hour			P.M. Peak Hour		
	In	Out	Total	In	Out	Total
Parents	254	254	508	104	104	208
Faculty and Staff	100	0	100	0	100	100
Buses	8	8	16	8	8	16
Total Vehicle	362	262	624	112	212	324
Walkers and Bikers	315	0	315	0	315	315

The peak morning school arrival time for both students and faculty/staff coincides with the morning peak hour. Given early dismissals throughout the day and some late-stays, the volume exiting the school in the afternoon peak hour is more spread than the amount entering in the morning peak hour. During inclement weather conditions, it can be expected that a number of students who normally walk or bike may be dropped off by parents. However, this is not the normal occurrence and design of the entry, exit and drop-off facilities can accommodate the increase. The above calculations do not take into account absentees, so the numbers can be considered worse case.

3.3 TRAFFIC ADDED TO STREET NETWORK

Trip distribution was determined by examining the predicted traffic volumes at the peak hours in the year 2010 with the Ocean Pointe and Ewa By Gentry projects in place. Trips were apportioned according to the turning movements at the intersections in the study network. Figure 9 shows the LOS conditions for the street network without the trips added from the new middle school.

Figure 10 shows the trip distribution percentages for the new school traffic for the study network. Using the *Wintass* program with the trip generation data, the trips added to the street network due to the new 'Ewa Beach Middle School is shown in Figure 11.

3.4 TRAFFIC VOLUMES WITH MIDDLE SCHOOL IN PLACE IN 2010

Using the existing 2007 volumes plus added background growth plus new trips generated by the project at full build out, the predicted traffic volumes are shown in Figure 12 for the school being in place in the year 2010. The next chapter will analyze the future conditions that arise from predicted traffic volumes. Exciting

3.5 FUTURE TRAFFIC SIGNALS

The traffic studies for 'Ewa By Gentry and for Ocean Point developments envision the need to install future traffic signals at two locations:

1. Kapolei Parkway and Keaunui Drive
2. Kapolei Parkway and Keoneula Boulevard

The Synchro runs made with the middle school in place assume the installation of traffic signals due to the traffic volume added by the 'Ewa By Gentry and Ocean Point projects. Analysis shows that the volumes for the two peak hours studied, justify signalization.

The decision on installation of traffic signals would come when the City and County of Honolulu (City) determines that it is warranted based on a detailed signal warrant study. However, based on the future traffic volumes and the design of these two intersections, it is evident that traffic signal control will be needed.

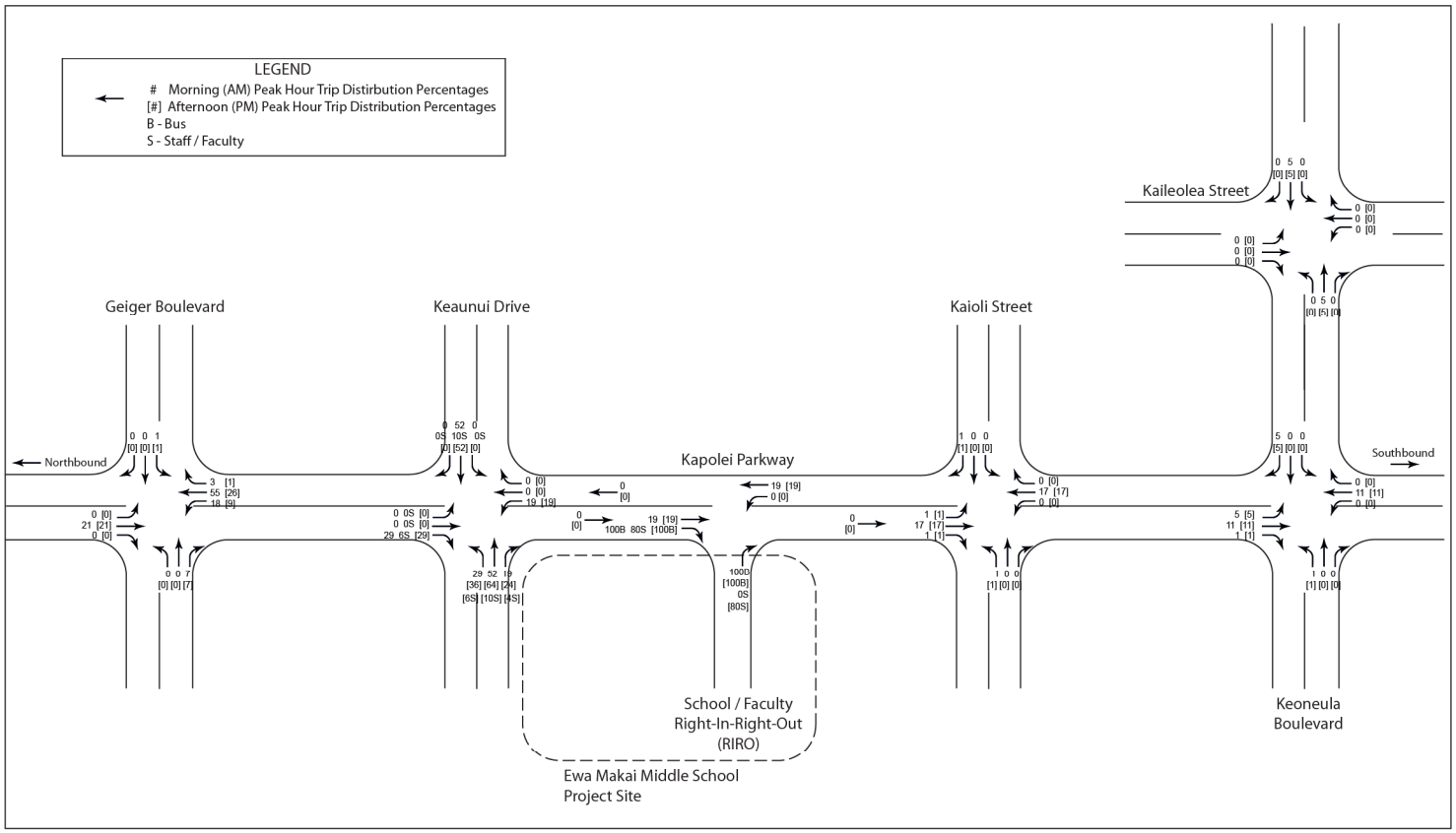

Percentage (%) Trip Distribution for New School Trips

Figure 10

Source:
SSFM International, Inc.

Ewa Makai Middle School
State of Hawaii, Department of Education

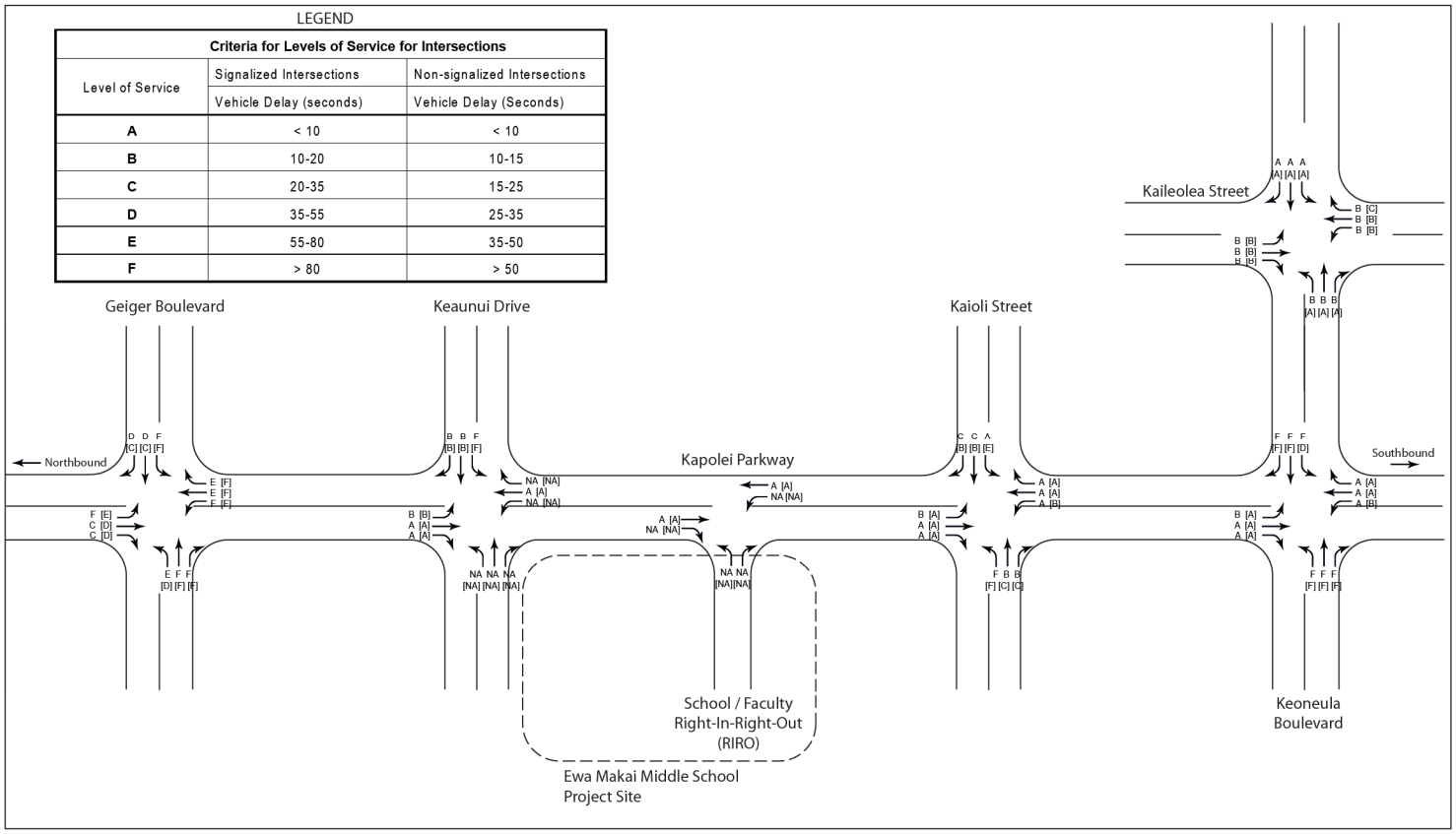

Levels of Service (LOS) for Future No Build Conditions for Morning and Afternoon Peak Hours

Figure 9

Source:
SSFM International, Inc.

Ewa Makai Middle School
State of Hawaii, Department of Education

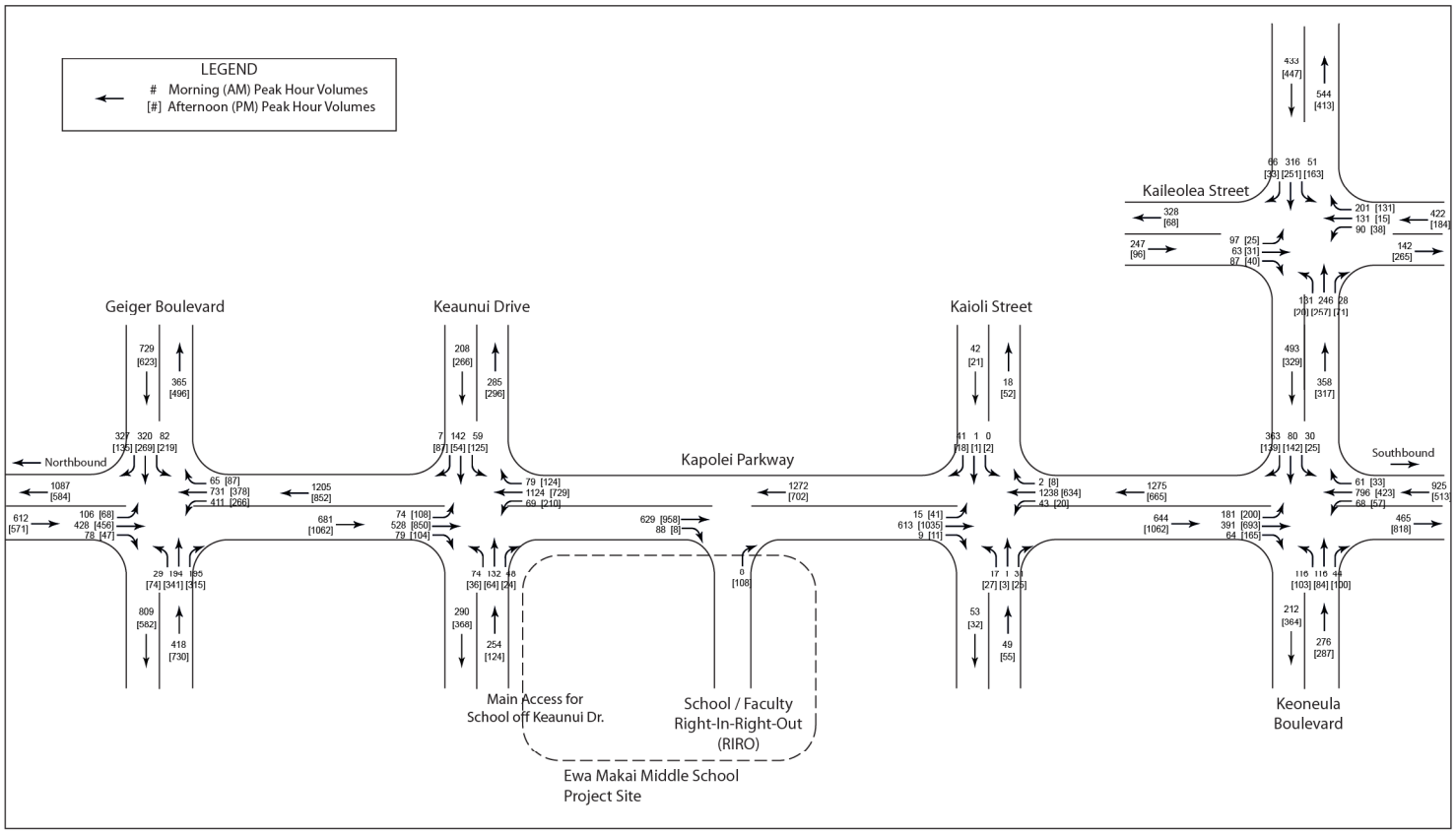

Predicted Traffic from New Middle School 2010 (Includes Background Traffic)

Figure 12

Ewa Makai Middle School
State of Hawaii, Department of Education

Source:
SSFM International, Inc.

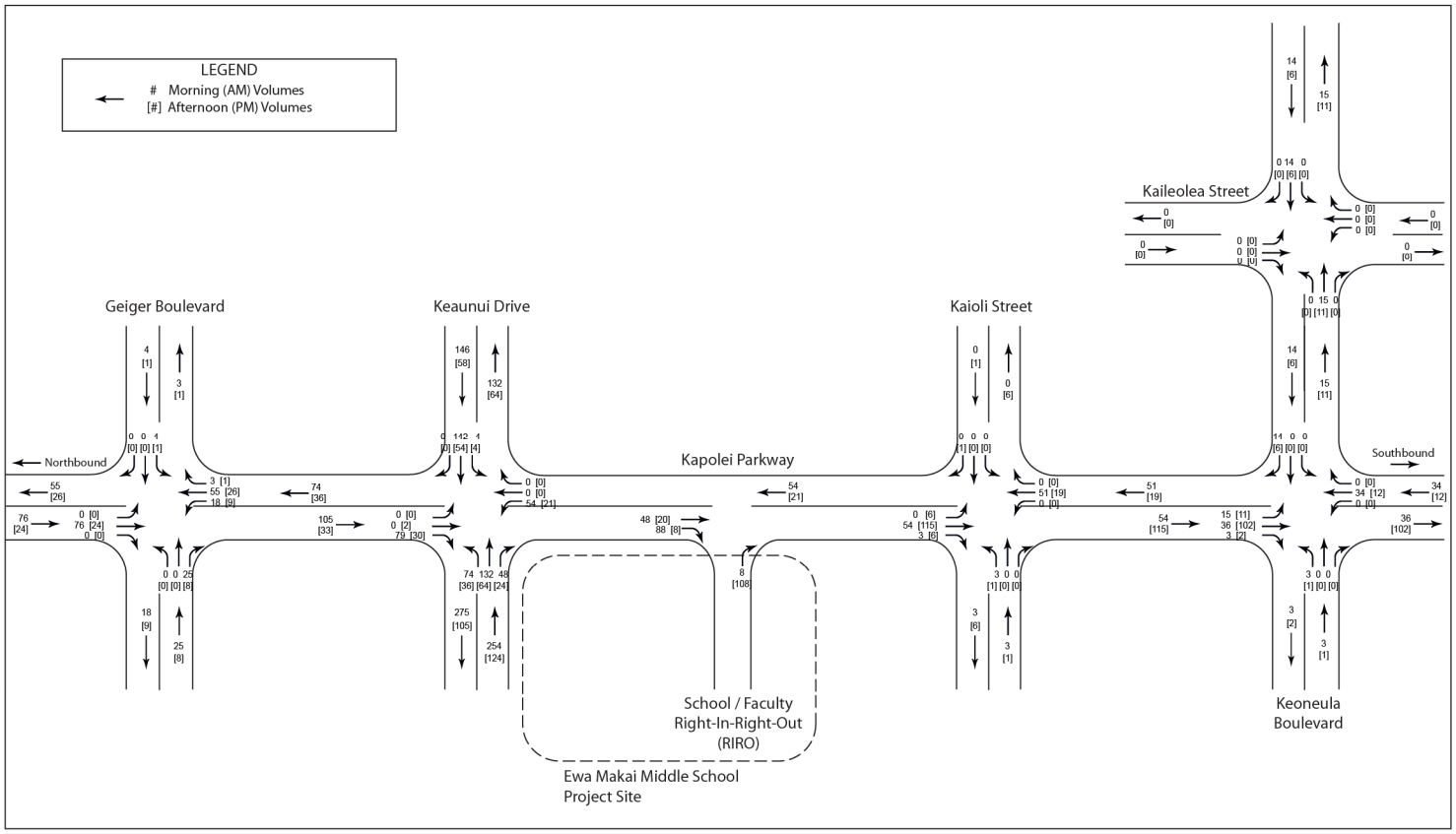

Predicted Added Traffic from New Middle School 2010

Figure 11

Ewa Makai Middle School
State of Hawaii, Department of Education

Source:
SSFM International, Inc.

CHAPTER 4
ANALYSIS OF FUTURE CONDITIONS

4.1 LEVEL OF SERVICE ANALYSIS (LOS)

The 2010 LOS with future background traffic and the school in place is found on Table 6 and Figure 13. Some movements show an improved LOS which would be due to the addition of new traffic signals at the intersections of Kapolei Parkway and Keaunui Drive and at the Kapolei Parkway and Keoneula Boulevard.

For comparison, Table 7 shows movements which would have poor LOS (E or F) with the school in place and without the traffic signals at the abovementioned intersections. However, as seen in comparing Tables 4 and 6, there are no intersection movements which are made worse as a result of adding the school traffic.

Table 8 shows the LOS for the major school access point without a signal in place. This table indicates that the access point will not operate well for either the morning or afternoon peak hours. Again, this analysis supports the need for installation of a traffic signal with timing that accounts for pedestrian crossings.

4.2 ROAD DESIGN CONSIDERATIONS

NCHRP Report 279 provides criteria for the analysis of the need for a right turn lane given design hour or predicted traffic volumes. Using the predicted traffic volumes for the intersection of Kapolei Parkway at both access points, it was determined that a right turn for southbound traffic entering the school might be needed during the afternoon peak hour. The criterion of NCHRP Report 279 was applied to the intersection of Kapolei Parkway and Keaunui Drive with the school in place and shows a need for a right-turn lane for southbound traffic entering the school from Kapolei Parkway. A similar effort was undertaken to review the secondary (RIRO) access point for the school which indicates that the addition of a right-turn lane for southbound right turn traffic at the RIRO access would be beneficial.

Table 6. Future Year Conditions (2010) with School - A.M. and P.M. Peak Hours With Traffic Signals In Place

Intersection	Movement	A.M. Peak Hour			P.M. Peak hour		
		Delay (Sec.)	v/c Ratio	LOS	Delay (Sec.)	v/c Ratio	LOS
Kapolei Parkway At Geiger Road	Northbound Left turn	> 80	> 1	F	> 80	> 1	F
	Northbound Thru/right	> 80	> 1	F	> 80	> 1	F
	Southbound Left turn	> 80	.99	F	> 80	.92	F
	Southbound Thru/right	> 80	.56	C	36.1	.65	D
	Eastbound Left	41.1	.33	D	60.6	.59	E
	Eastbound Thru/right	35.5	.81	D	43.5	.85	D
	Westbound Left	39.1	.46	D	> 80	.90	F
	Westbound Thru/right	29.1	.75	C	40.0	.83	D

Table 6 (cont.). Future Year Conditions (2010) with School - A.M. and P.M. Peak Hours With Traffic Signals In Place

Kapolei Parkway At Kaioli Street*	Eastbound Left	> 50	.43	F	> 80	.61	F
	Eastbound Thru/right	14.4	.09	B	22.6	.14	C
	Westbound Left	0	0	A	58.6	.03	F
	Westbound Thru/right	18.9	.16	A	14.9	.06	B
	Northbound Left turn	9.3	.06	A	11.5	.04	B
	Northbound Thru/right	0	.56	A	0	.29	A
	Southbound Left turn	12.9	.04	B	9.4	.05	A
	Southbound Thru/right	0	.28	A	0	.47	A
	Total	2.1	.49	A	3.2	.43	A
Kapolei Parkway At Keoneula Boulevard	Eastbound Left	> 80	.95	F	24.0	.54	C
	Eastbound Thru/right	28.4	.21	C	20.3	.27	C
	Westbound Left	27.7	.12	C	19.4	.11	B
	Westbound Thru/right	33.8	.64	C	21.3	.42	C
	Northbound Left turn	12.4	.19	B	13.4	.31	B
	Northbound Thru/right	67.5	1.05	E	18.2	.70	B
	Southbound Left turn	> 80	.58	F	9.3	.53	A
	Southbound Thru/right	7.4	.26	A	6.6	.48	A
	Total	48.5	1.02	D	13.5	.62	B
Keonula Boulevard at Kaileola Avenue	Eastbound Left	13.3	.57	B	3.4	.05	A
	Eastbound Thru/right	9.3	.26	A	3.9	.22	A
	Westbound Left	9.0	.18	A	5.1	.43	A
	Westbound Thru/right	9.8	.36	A	3.8	.19	A
	Northbound Left turn	14.2	.57	B	18.4	.29	B
	Northbound Thru/right	12.7	.48	B	22.6	.61	C
	Southbound Left turn	14.3	.56	B	18.2	.27	B
	Southbound Thru/right	10.9	.21	B	17.7	.19	B
	Total	11.6	.57	B	8.3	.47	A
Kapolei Parkway At Keaunui Drive*	Eastbound Left	17.2	.29	B	16.6	.14	B
	Eastbound Thru/right	18.4	.49	B	17.0	.23	B
	Westbound Left	17.1	.26	B	18.7	.45	B
	Westbound Thru/right	17.7	.39	B	18.1	.39	B
	Northbound Left turn	4.3	.16	A	4.3	.09	A
	Northbound Thru/right	5.1	.42	A	4.8	.28	A
	Southbound Left turn	6.1	.39	A	5.4	.32	A
	Southbound Thru/right	4.6	.29	A	5.8	.48	A
	Total	7.5	.44	A	7.5	.47	A
Kapolei Parkway at Second Access (RIRO)*	Eastbound Right	10.7	.01	B	12.5	.20	B
	Northbound Thru	0	.41	A	0	.20	A
	Southbound Thru/Right	0	.25	A	0	.41	A
	Total	0	.42	A	0.8	.43	A

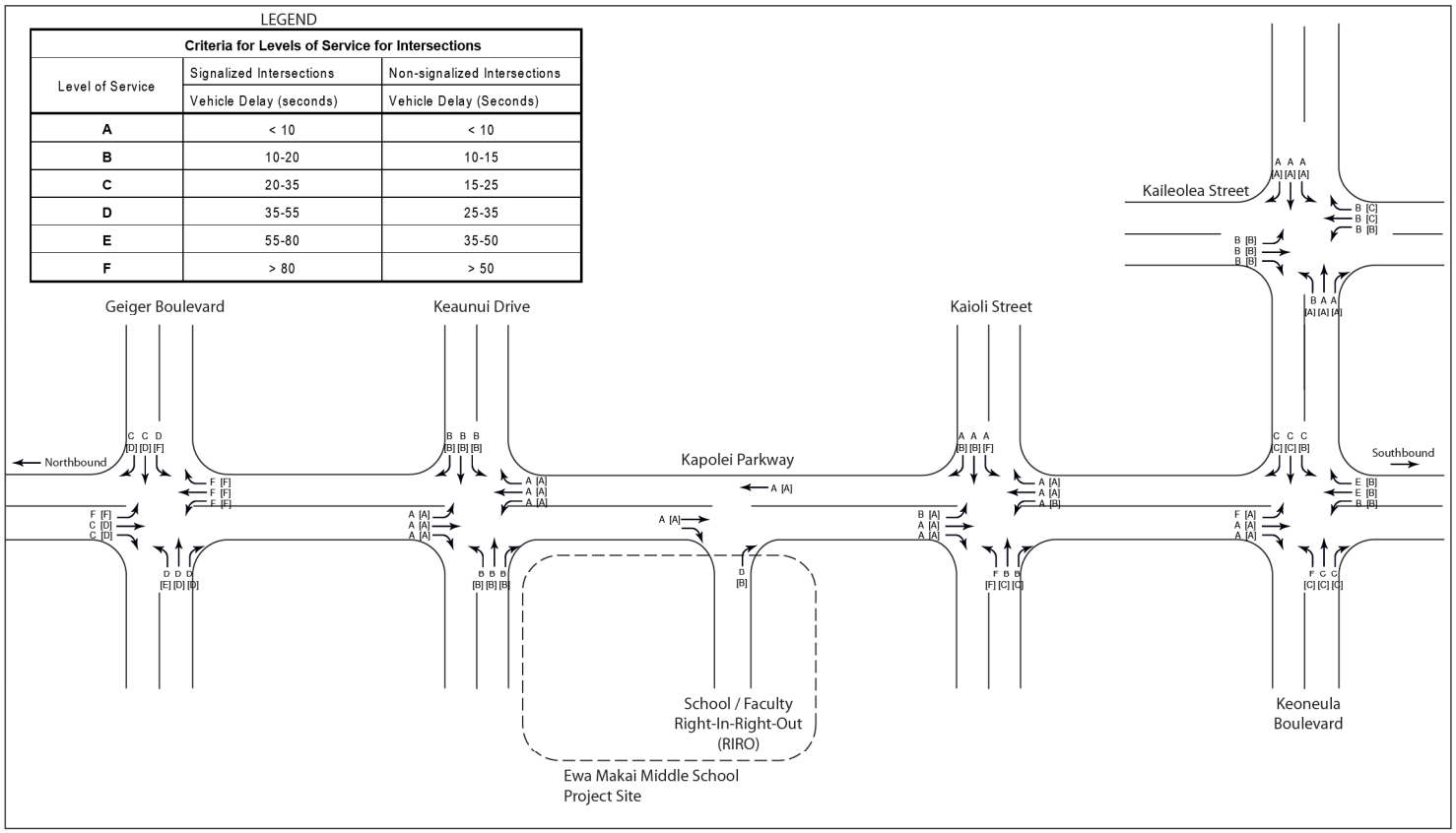

Future (2010) LOS with School in Place for Morning and Afternoon Peak Hours With Traffic Signals

Figure 13

Ewa Makai Middle School
State of Hawaii, Department of Education

Source:
SSFM International, Inc.

Table 7. Intersection Movements with Poor LOS in the Year 2010 with School

Intersection	Movement	Peak Time Period	LOS & Congestion
Kapolei Parkway at Geiger Road	Northbound Left Turn	A.M.	F, v/c > 1
		P.M.	F, v/c > 1
	Northbound Thru/Right	A.M.	E, v/c > 1
		P.M.	F, v/c > 1
	Southbound Left Turn	A.M.	F, v/c = 0.99
		P.M.	E, v/c = 0.75
	Eastbound Left	A.M.	E, v/c = 0.59
	Eastbound Thru/Right	A.M.	F, v/c = 0.81
		P.M.	F, v/c > 1
	Westbound Left	A.M.	F, v/c = 0.86
		P.M.	F, v/c > 1
Kapolei Parkway at Kaioli Street	Eastbound Left	A.M.	F, v/c = 0.34
		P.M.	F, v/c = 0.44
	Westbound Left	P.M.	E, v/c = 0.03
Kapolei Parkway at Keoneula Boulevard	Eastbound Left	A.M.	F, v/c > 1
		P.M.	F, v/c > 1
	Eastbound Thru/Right	A.M.	F, v/c > 1
		P.M.	F, v/c = 0.64
	Westbound Left	A.M.	F, v/c > 1
	Westbound Thru/Right	A.M.	F, v/c > 1
		P.M.	F, v/c > 1
Kapolei Parkway at Keaunui Drive	Westbound Left	A.M.	F, v/c = 0.44
		P.M.	F, v/c = 0.73

Table 8. Future Year Conditions (2010) with School for A.M. and P.M. Peak Hours without a Traffic Signal in Place

Intersection	Movement	A.M. Peak Hour			P.M. Peak hour		
		Delay (Sec.)	v/c Ratio	LOS	Delay (Sec.)	v/c Ratio	LOS
Kapolei Parkway at New School Access and Connector to Fort Weaver Road*	Eastbound Left	> 50	> 1	F	> 50	> 1	F
	Eastbound Thru/right	> 50	> 1	F	> 50	> 1	F
	Westbound Left	> 50	> 1	F	> 50	> 1	F
	Westbound Thru/right	> 50	> 1	F	> 50	> 1	F
	Northbound Left turn	9.4	.07	A	10.6	.03	B
	Northbound Thru/right	0	.29	A	0	.17	A
	Southbound Left turn	13.1	.15	B	10.4	.15	B
	Southbound Thru/right	0	.25	A	0	.36	A
	Total	> 50	.58	A	> 50	.52	A

CHAPTER 5
CONCLUSIONS AND RECOMMENDATIONS

5.1 CONCLUSIONS

As a result of the analysis of the data collected and the predicted traffic conditions, the following conclusions are made:

1. The traffic added to the street network at build out of the school will in and of itself not create any significant traffic congestion or traffic flow problems. This is based on a comparison of traffic volumes for the a.m. and p.m. peak hours with and without the school in place but with the background growth due to the 'Ewa By Gentry and Ocean Point projects.
2. The NCHRP Report 279 criteria indicate that consideration should be given to addition of right turn lanes for the two new school entrances.
3. As 'Ewa By Gentry and Ocean Point continue towards fuller build-out, traffic signals will be needed to accommodate background and new school traffic at the intersections of Kapolei Parkway at the new school and the connector to Ft. Weaver Boulevard. at Kapolei Parkway at Keoneula Boulevard. These signals were envisioned by the 'Ewa By Gentry and Ocean Point traffic impact analysis study reports done for those projects and verified by this study. It will be necessary to conduct the updated signal warrants at least every two years.

5.2 RECOMMENDATIONS

The following recommendations are made for the full build out of the project:

1. The school district should consider the addition of right turn lanes on Kapolei Parkway at the two new school entrances. While the NCHRP 279 criteria indicate the possible need for the turn lanes, the HCM analysis shows acceptable LOS without the lanes. It will be necessary to review this with the City and HDOT.
2. The County and HDOT should continue to monitor traffic volume growth on Kapolei Parkway resulting from the on-going development of the 'Ewa By Gentry and Ocean Point projects. At some point, signalization will be required for the intersections of Kapolei Parkway and Keaunui Drive and Kapolei Parkway and Keoneula Boulevard. It is recommended that these signals be in place before the construction of the school is completed.
3. The signals which will be necessary at the intersections of Kapolei Parkway. at the new school access and the connector to Ft. Weaver Boulevard and at Keoneula Boulevard should have pedestrian features on all approaches. This study indicates about 350 students walking to school each day and many of them will need to cross Kapolei

Parkway at these locations. Pedestrian signals and push buttons along with well-marked crosswalks will be essential. Crossing guard protection at peak school times may also be needed and should be considered. The school district may want to consider establishment of a safe routes to school program for this school due to the large number of potential walkers and the newness of the school and residential neighborhood.

4. Adequate radii should be provided for the school access points along with sufficient on-site storage for vehicle queues.

APPENDICES

APPENDIX A

SITE PHOTOGRAPHS

Photo 1A
Intersection - Geiger Rd / Kapolei Parkway facing N

Photo 1B
Intersection - Geiger Rd / Kapolei Parkway facing E

Photo 2A
Intersection - Future Keanui Drive /
Kapolei Parkway facing E

Photo 2B
Intersection - Future Keanui Drive /
Kapolei Parkway facing SE

Photo 3A
Project Site entrance from Kapolei Parkway facing S

Photo 2B
Project Site entrance from Kapolei Parkway facing SW

Photo 4A
Intersection - Kapolei Parkway / Kaioli St facing E

Photo 4B
IIntersection - Kapolei Parkway / Kaioli St facing SE

Photo 5A
Intersection - Keoneula Blvd /
Kapolei Parkway facing NE

Photo 5B
Intersection - Keoneula Blvd /
Kapolei Parkway facing NE

Photo 6A
Intersection - Keoneula Blvd / Kaileolea facing W

Photo 6B
Intersection - Keoneula Blvd /
Kaileolea facing N - Elem School

APPENDIX B

TRAFFIC SIGNAL PLAN AND TIMING INFORMATION

APPENDED SIGNAL TIMING PLANS FOR CONSULTANTS

INTERSECTION: KEONELUA @ KAILEOLEA

PHASING INFORMATION

Phase	2	4	6					
Ped Walk	7	7	7					
Ped FDW	20	25	20					
Min Green	10	5	10					
Veh Ext Max Gap Min Gap	5.0 ↓	3.0 ↓	5.0 ↓					
Max Limit	60	60	60					
Yellow All Red	4 2	4 2	4 2					

CYCLE INFORMATION

	AM PLAN	PM PLAN	SAT PLAN
Cycle Length	Free	Free	Free
Force Off 1			
Force Off 2			
Force Off 3			
Force Off 4			
Force Off 5			
Force Off 6			
Force Off 7			
Force Off 8			
Offset			

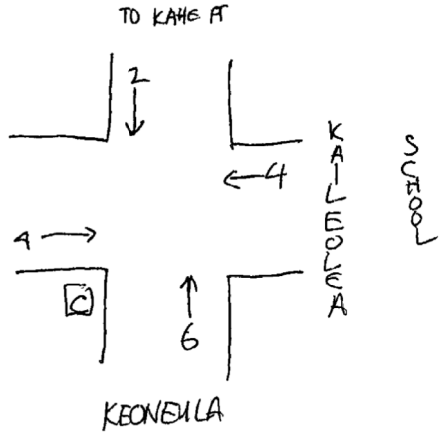

Phasing Diagram

2 ↓	4 ⇄			
6 ↑				

This fax was received by GFI FAXmaker fax server. For more information, visit: http://www.gfi.com

APPENDED SIGNAL TIMING PLANS FOR CONSULTANTS

INTERSECTION: GEIGER @ KAPOLEI PARKWAY

PHASING INFORMATION

Phase	1	2	3	4	5	6	7	8
Ped Walk		7		7		7		7
Ped FDW		27		18		27		18
Min Green	5	10	5	5	5	10	5	5
Veh Ext Max Gap Min Gap	2.0 ↓	5.0 ↓	2.0 ↓	3.0 ↓	2.0 ↓	5.0 ↓	2.0 ↓	3.0 ↓
Max Limit	30	60	30	30	30	60	30	30
Yellow All Red	4 1	4 2	4 1	4 1	4 1	4 2	4 1	4 1

CYCLE INFORMATION

	AM PLAN	PM PLAN	SAT PLAN
Cycle Length	Free	Free	Free
Force Off 1			
Force Off 2			
Force Off 3			
Force Off 4			
Force Off 5			
Force Off 6			
Force Off 7			
Force Off 8			
Offset			

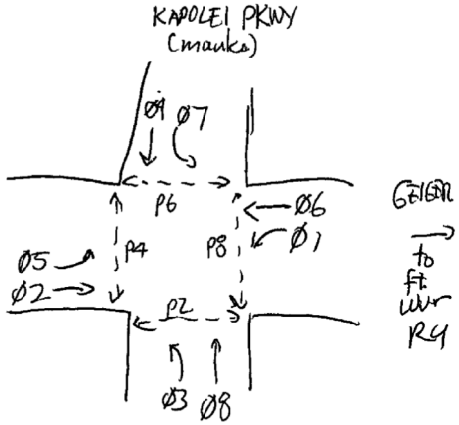

Phasing Diagram

1 ↙	2 →	3 ↰	4 ↓	
5 ↗	6 ←	7 ↳	8 ↑	

This fax was received by GFI FAXmaker fax server. For more information, visit: http://www.gfi.com

APPENDIX C

MANUAL TRAFFIC COUNT DATA

File Name : AM - Kapolei Prkway - Kaioli St Rev
Site Code : 00000000
Start Date : 5/24/2007
Page No : 1

Groups Printed- Unshifted - Bank 1

	KP From North					KS From East					KP From South					KS From West					
Start Time	Right	Thru	Left	Peds	App. Total	Right	Thru	Left	Peds	App. Total	Right	Thru	Left	Peds	App. Total	Right	Thru	Left	Peds	App. Total	Int. Total
06:00 AM	3	72	0	0	75	9	0	0	0	9	0	149	4	0	153	4	0	0	0	4	241
06:15 AM	8	63	2	0	73	9	0	0	0	9	0	129	6	0	135	0	0	2	0	2	219
06:30 AM	8	73	4	0	85	11	0	3	0	14	0	148	13	0	161	3	0	4	0	7	267
06:45 AM	6	70	1	0	77	8	0	0	0	8	0	117	16	0	133	8	0	4	0	12	230
Total	25	278	7	0	310	37	0	3	0	40	0	543	39	0	582	15	0	10	0	25	957
07:00 AM	3	101	1	0	105	8	0	0	0	8	0	137	14	0	151	10	0	2	0	12	276
07:15 AM	1	108	2	0	111	8	0	0	0	8	0	159	6	0	165	9	0	4	0	13	297
07:30 AM	1	130	3	0	134	8	0	0	0	8	2	177	12	0	191	6	1	6	0	13	346
07:45 AM	1	79	6	0	86	4	1	0	0	5	0	172	11	0	183	6	0	2	0	8	282
Total	6	418	12	0	436	28	1	0	0	29	2	645	43	0	690	31	1	14	0	46	1201
08:00 AM	1	55	4	0	60	8	0	0	0	8	1	112	4	0	117	4	0	0	0	4	189
08:15 AM	0	50	1	0	51	3	0	2	0	5	0	77	8	0	85	2	0	4	0	6	147
Grand Total	32	801	24	0	857	76	1	5	0	82	3	1377	94	0	1474	52	1	28	0	81	2494
Apprch %	3.7	93.5	2.8	0		92.7	1.2	6.1	0		0.2	93.4	6.4	0		64.2	1.2	34.6	0		
Total %	1.3	32.1	1	0	34.4	3	0	0.2	0	3.3	0.1	55.2	3.8	0	59.1	2.1	0	1.1	0	3.2	
Unshifted	30	769	21	0	820	76	1	5	0	82	3	1348	81	0	1432	47	0	26	0	73	2407
% Unshifted	93.8	96	87.5	0	95.7	100	100	100	0	100	100	97.9	86.2	0	97.2	90.4	0	92.9	0	90.1	96.5
Bank 1	2	32	3	0	37	0	0	0	0	0	0	29	13	0	42	5	1	2	0	8	87
% Bank 1	6.2	4	12.5	0	4.3	0	0	0	0	0	0	2.1	13.8	0	2.8	9.6	100	7.1	0	9.9	3.5

File Name : AM - Kapolei Prkway - Geiger Rd
Site Code : 00000000
Start Date : 5/24/2007
Page No : 1

Groups Printed- Unshifted - Bank 1

	KP From North					GR From East					KP From South					GR From West					
Start Time	Right	Thru	Left	Peds	App. Total	Right	Thru	Left	Peds	App. Total	Right	Thru	Left	Peds	App. Total	Right	Thru	Left	Peds	App. Total	Int. Total
06:00 AM	25	25	14	0	64	14	96	13	0	123	9	54	99	0	162	29	20	0	0	49	398
06:15 AM	31	21	15	1	68	29	88	24	0	141	12	52	88	0	152	29	36	2	0	67	428
06:30 AM	21	33	27	0	81	22	107	18	0	147	10	61	89	0	160	38	58	6	0	102	490
06:45 AM	30	39	16	0	85	14	89	20	0	123	12	69	64	0	145	29	52	6	0	87	440
Total	107	118	72	1	298	79	380	75	0	534	43	236	340	0	619	125	166	14	0	305	1756
07:00 AM	17	55	32	0	104	40	97	23	0	160	16	54	75	0	145	24	31	3	0	58	467
07:15 AM	25	57	27	0	109	27	95	13	0	135	8	79	91	0	178	46	49	5	0	100	522
07:30 AM	26	91	35	0	152	35	77	13	0	125	16	80	89	0	185	36	48	7	0	91	553
07:45 AM	7	45	12	0	64	25	43	14	0	82	25	74	56	0	155	29	60	12	1	102	403
Total	75	248	106	0	429	127	312	63	0	502	65	287	311	0	663	135	188	27	1	351	1945
08:00 AM	12	20	22	0	54	27	48	18	0	93	23	66	54	0	143	33	33	11	0	77	367
08:15 AM	8	16	8	0	32	25	56	12	1	94	15	36	34	0	85	31	34	7	0	72	283
Grand Total	202	402	208	1	813	258	796	168	1	1223	146	625	739	0	1510	324	421	59	1	805	4351
Apprch %	24.8	49.4	25.6	0.1		21.1	65.1	13.7	0.1		9.7	41.4	48.9	0		40.2	52.3	7.3	0.1		
Total %	4.6	9.2	4.8	0	18.7	5.9	18.3	3.9	0	28.1	3.4	14.4	17	0	34.7	7.4	9.7	1.4	0	18.5	
Unshifted	202	402	208	1	813	258	796	168	1	1223	146	625	739	0	1510	324	421	59	1	805	4351
% Unshifted	100	100	100	100	100	100	100	100	100	100	100	100	100	0	100	100	100	100	100	100	100
Bank 1	0	0	0	0	0	0	0	0	0	0	0	0	0	0	0	0	0	0	0	0	0
% Bank 1	0	0	0	0	0	0	0	0	0	0	0	0	0	0	0	0	0	0	0	0	0

File Name : AM - Keoneula Blvd - Kaileolea St
Site Code : 00000000
Start Date : 5/24/2007
Page No : 1

Groups Printed- Unshifted - Bank 1

	KS From North					KB From East					KS From South					KB From West					
Start Time	Right	Thru	Left	Peds	App. Total	Right	Thru	Left	Peds	App. Total	Right	Thru	Left	Peds	App. Total	Right	Thru	Left	Peds	App. Total	Int. Total
06:00 AM	2	0	2	0	4	1	39	13	0	53	45	1	8	0	54	1	14	0	0	15	126
06:15 AM	0	1	0	0	1	1	37	12	0	50	31	0	8	0	39	1	19	4	0	24	114
06:30 AM	7	0	5	0	12	2	41	18	0	61	47	6	9	0	62	2	21	10	0	33	168
06:45 AM	8	2	11	0	21	9	25	13	0	47	33	9	8	0	50	2	29	9	0	40	158
Total	17	3	18	0	38	13	142	56	0	211	156	16	33	0	205	6	83	23	0	112	566
07:00 AM	8	7	12	0	27	14	13	2	0	29	43	16	11	0	70	5	31	21	0	57	183
07:15 AM	19	10	18	0	47	15	29	11	0	55	46	26	13	0	85	3	24	25	0	52	239
07:30 AM	30	32	29	0	91	22	42	7	0	71	45	49	19	0	113	3	39	45	0	87	362
07:45 AM	11	6	19	0	36	5	50	16	0	71	16	4	9	0	29	8	23	14	0	45	181
Total	68	55	78	0	201	56	134	36	0	226	150	95	52	0	297	19	117	105	0	241	965
08:00 AM	10	1	4	0	15	3	18	10	0	31	32	1	6	0	39	3	17	4	0	24	109
08:15 AM	3	1	5	0	9	2	15	4	0	21	22	3	2	0	27	3	9	4	0	16	73
Grand Total	98	60	105	0	263	74	309	106	0	489	360	115	93	0	568	31	226	136	0	393	1713
Apprch %	37.3	22.8	39.9	0		15.1	63.2	21.7	0		63.4	20.2	16.4	0		7.9	57.5	34.6	0		
Total %	5.7	3.5	6.1	0	15.4	4.3	18	6.2	0	28.5	21	6.7	5.4	0	33.2	1.8	13.2	7.9	0	22.9	
Unshifted	98	60	105	0	263	74	298	103	0	475	360	114	92	0	566	30	209	136	0	375	1679
% Unshifted	100	100	100	0	100	100	96.4	97.2	0	97.1	100	99.1	98.9	0	99.6	96.8	92.5	100	0	95.4	98
Bank 1	0	0	0	0	0	0	11	3	0	14	0	1	1	0	2	1	17	0	0	18	34
% Bank 1	0	0	0	0	0	0	3.6	2.8	0	2.9	0	0.9	1.1	0	0.4	3.2	7.5	0	0	4.6	2

File Name : AM - Kapolei Prkway at Keoneula Blvd
Site Code : 00000000
Start Date : 5/24/2007
Page No : 1

Groups Printed- Unshifted - Bank 1

	KP From North					KB From East					KP From South					KB From West					
Start Time	Right	Thru	Left	Peds	App. Total	Right	Thru	Left	Peds	App. Total	Right	Thru	Left	Peds	App. Total	Right	Thru	Left	Peds	App. Total	Int. Total
06:00 AM	9	54	4	1	68	36	6	4	2	48	4	114	1	1	120	19	0	4	0	23	259
06:15 AM	12	53	10	0	75	27	8	8	0	43	4	97	0	0	101	14	0	4	0	18	237
06:30 AM	9	51	14	0	74	38	6	8	0	52	9	121	0	0	130	5	0	2	0	7	263
06:45 AM	8	53	15	0	76	31	2	8	0	41	16	103	5	0	124	9	0	1	0	10	251
Total	38	211	43	1	293	132	22	28	2	184	33	435	6	1	475	47	0	11	0	58	1010
07:00 AM	2	79	33	0	114	33	0	2	1	36	13	109	6	0	128	3	1	1	0	5	283
07:15 AM	5	83	33	0	121	45	2	5	0	52	10	123	0	0	133	2	0	0	0	2	308
07:30 AM	3	103	47	0	153	74	1	6	0	81	18	120	0	0	138	6	0	1	0	7	379
07:45 AM	2	62	21	0	85	58	0	13	0	71	9	118	1	0	128	3	1	0	0	4	288
Total	12	327	134	0	473	210	3	26	1	240	50	470	7	0	527	14	2	2	0	18	1258
08:00 AM	2	47	13	0	62	24	1	9	0	34	6	90	3	0	99	2	0	2	0	4	199
08:15 AM	3	44	6	0	53	14	0	3	0	17	7	67	1	0	75	2	0	3	0	5	150
Grand Total	55	629	196	1	881	380	26	66	3	475	96	1062	17	1	1176	65	2	18	0	85	2617
Apprch %	6.2	71.4	22.2	0.1		80	5.5	13.9	0.6		8.2	90.3	1.4	0.1		76.5	2.4	21.2	0		
Total %	2.1	24	7.5	0	33.7	14.5	1	2.5	0.1	18.2	3.7	40.6	0.6	0	44.9	2.5	0.1	0.7	0	3.2	
Unshifted	54	626	196	1	877	379	26	65	3	473	96	1056	17	1	1170	63	2	17	0	82	2602
% Unshifted	98.2	99.5	100	100	99.5	99.7	100	98.5	100	99.6	100	99.4	100	100	99.5	96.9	100	94.4	0	96.5	99.4
Bank 1	1	3	0	0	4	1	0	1	0	2	0	6	0	0	6	2	0	1	0	3	15
% Bank 1	1.8	0.5	0	0	0.5	0.3	0	1.5	0	0.4	0	0.6	0	0	0.5	3.1	0	5.6	0	3.5	0.6

File Name : PM - Kapolei Prkway - Kaioli St
Site Code : 00000000
Start Date : 5/24/2007
Page No : 1

Groups Printed- Unshifted - Bank 1

	KP From North					KS From East					KP From South					KS From West					
Start Time	Right	Thru	Left	Peds	App. Total	Right	Thru	Left	Peds	App. Total	Right	Thru	Left	Peds	App. Total	Right	Thru	Left	Peds	App. Total	Int. Total
03:00 PM	0	101	8	0	109	7	0	0	0	7	4	84	5	0	93	3	0	1	0	4	213
03:15 PM	2	107	6	0	115	0	1	0	0	1	1	97	4	0	102	7	1	0	0	8	226
03:30 PM	2	122	10	0	134	4	0	1	0	5	1	112	6	0	119	12	1	22	0	35	293
03:45 PM	1	119	7	0	127	6	0	1	0	7	2	89	5	0	96	3	1	0	0	4	234
Total	5	449	31	0	485	17	1	2	0	20	8	382	20	0	410	25	3	23	0	51	966
04:00 PM	5	109	9	0	123	6	0	1	0	7	2	80	4	0	86	1	0	2	0	3	219
04:15 PM	2	121	9	0	132	4	0	2	0	6	3	74	4	0	81	1	1	3	0	5	224
04:30 PM	2	121	10	0	133	8	0	1	0	9	3	71	4	0	78	1	0	1	0	2	222
04:45 PM	3	141	6	0	150	2	0	0	0	2	2	78	2	0	82	1	0	2	0	3	237
Total	12	492	34	0	538	20	0	4	0	24	10	303	14	0	327	4	1	8	0	13	902
05:00 PM	3	103	5	0	111	3	0	1	0	4	1	66	0	0	67	0	0	4	0	4	186
05:15 PM	1	110	7	0	118	5	0	2	0	7	0	83	5	0	88	2	1	2	0	5	218
05:30 PM	2	106	4	0	112	3	0	0	0	3	2	64	2	0	68	1	0	7	0	8	191
05:45 PM	6	107	9	0	122	2	1	0	0	3	2	61	4	0	67	5	0	1	0	6	198
Total	12	426	25	0	463	13	1	3	0	17	5	274	11	0	290	8	1	14	0	23	793
Grand Total	29	1367	90	0	1486	50	2	9	0	61	23	959	45	0	1027	37	5	45	0	87	2661
Apprch %	2	92	6.1	0		82	3.3	14.8	0		2.2	93.4	4.4	0		42.5	5.7	51.7	0		
Total %	1.1	51.4	3.4	0	55.8	1.9	0.1	0.3	0	2.3	0.9	36	1.7	0	38.6	1.4	0.2	1.7	0	3.3	
Unshifted	29	1354	90	0	1473	50	2	9	0	61	23	944	44	0	1011	36	5	45	0	86	2631
% Unshifted	100	99	100	0	99.1	100	100	100	0	100	100	98.4	97.8	0	98.4	97.3	100	100	0	98.9	98.9
Bank 1	0	13	0	0	13	0	0	0	0	0	0	15	1	0	16	1	0	0	0	1	30
% Bank 1	0	1	0	0	0.9	0	0	0	0	0	0	1.6	2.2	0	1.6	2.7	0	0	0	1.1	1.1

File Name : PM - Kapolei Prkway - Geiger Rd
Site Code : 00000000
Start Date : 5/24/2007
Page No : 1

Groups Printed- Unshifted - Bank 1

	KP From North					GR From East					KP From South					GR From West					
Start Time	Right	Thru	Left	Peds	App. Total	Right	Thru	Left	Peds	App. Total	Right	Thru	Left	Peds	App. Total	Right	Thru	Left	Peds	App. Total	Int. Total
03:00 PM	8	32	18	0	58	27	49	21	0	97	18	34	55	0	107	63	73	19	0	155	417
03:15 PM	11	37	16	0	64	37	79	22	0	138	16	32	46	0	94	59	88	17	0	164	460
03:30 PM	4	49	15	0	68	37	51	23	0	111	27	59	65	0	151	57	81	19	0	157	487
03:45 PM	11	43	19	0	73	34	57	32	0	123	24	42	39	0	105	54	84	11	1	150	451
Total	34	161	68	0	263	135	236	98	0	469	85	167	205	0	457	233	326	66	1	626	1815
04:00 PM	8	30	15	1	54	40	57	31	0	128	11	42	32	0	85	68	87	18	0	173	440
04:15 PM	7	56	15	0	78	41	51	22	0	114	23	28	30	0	81	58	85	15	0	158	431
04:30 PM	5	37	21	0	63	44	51	28	1	124	8	41	36	0	85	73	75	15	0	163	435
04:45 PM	7	40	15	0	62	37	54	25	0	116	9	35	34	0	78	74	73	13	0	160	416
Total	27	163	66	1	257	162	213	106	1	482	51	146	132	0	329	273	320	61	0	654	1722
05:00 PM	15	36	14	0	65	41	35	27	0	103	17	33	23	0	73	51	94	14	0	159	400
05:15 PM	4	38	11	0	53	47	28	22	0	97	12	31	41	0	84	66	82	18	1	167	401
05:30 PM	7	37	21	0	65	34	47	15	0	96	14	40	28	0	82	58	75	15	0	148	391
05:45 PM	17	38	19	0	74	47	38	36	0	121	13	24	27	0	64	61	71	21	0	153	412
Total	43	149	65	0	257	169	148	100	0	417	56	128	119	0	303	236	322	68	1	627	1604
Grand Total	104	473	199	1	777	466	597	304	1	1368	192	441	456	0	1089	742	968	195	2	1907	5141
Apprch %	13.4	60.9	25.6	0.1		34.1	43.6	22.2	0.1		17.6	40.5	41.9	0		38.9	50.8	10.2	0.1		
Total %	2	9.2	3.9	0	15.1	9.1	11.6	5.9	0	26.6	3.7	8.6	8.9	0	21.2	14.4	18.8	3.8	0	37.1	
Unshifted	104	473	199	1	777	466	597	304	1	1368	192	441	456	0	1089	742	968	195	2	1907	5141
% Unshifted	100	100	100	100	100	100	100	100	100	100	100	100	100	0	100	100	100	100	100	100	100
Bank 1	0	0	0	0	0	0	0	0	0	0	0	0	0	0	0	0	0	0	0	0	0
% Bank 1	0	0	0	0	0	0	0	0	0	0	0	0	0	0	0	0	0	0	0	0	0

File Name : PM - Keoneula Blvd - Kaileolea St
Site Code : 00000000
Start Date : 5/24/2007
Page No : 1

Groups Printed- Unshifted - Bank 1

	KS From North					KB From East					KS From South					KB From West					
Start Time	Right	Thru	Left	Peds	App. Total	Right	Thru	Left	Peds	App. Total	Right	Thru	Left	Peds	App. Total	Right	Thru	Left	Peds	App. Total	Int. Total
03:00 PM	4	3	3	0	10	4	18	34	0	56	22	0	3	0	25	3	21	4	0	28	119
03:15 PM	3	4	7	0	14	7	23	36	0	66	31	2	7	0	40	4	22	7	0	33	153
03:30 PM	10	2	7	0	19	9	31	26	0	66	46	2	3	0	51	11	48	1	0	60	196
03:45 PM	10	1	6	0	17	8	25	35	0	68	22	3	6	0	31	6	42	4	0	52	168
Total	27	10	23	0	60	28	97	131	0	256	121	7	19	0	147	24	133	16	0	173	636
04:00 PM	6	5	8	0	19	14	25	24	0	63	24	1	5	0	30	8	29	4	0	41	153
04:15 PM	8	2	4	0	14	4	16	29	0	49	17	3	4	0	24	2	24	2	0	28	115
04:30 PM	4	6	2	0	12	6	23	29	0	58	27	5	3	0	35	5	23	6	0	34	139
04:45 PM	5	10	6	0	21	13	17	28	0	58	23	2	1	0	26	13	24	8	0	45	150
Total	23	23	20	0	66	37	81	110	0	228	91	11	13	0	115	28	100	20	0	148	557
05:00 PM	5	10	13	0	28	9	10	25	0	44	25	3	6	0	34	6	19	6	0	31	137
05:15 PM	12	8	4	0	24	11	17	31	0	59	24	1	4	0	29	5	25	7	0	37	149
05:30 PM	5	3	11	0	19	3	27	32	0	62	26	2	5	0	33	9	26	2	0	37	151
05:45 PM	4	1	8	0	13	2	20	42	0	64	31	0	1	0	32	9	17	3	1	30	139
Total	26	22	36	0	84	25	74	130	0	229	106	6	16	0	128	29	87	18	1	135	576
Grand Total	76	55	79	0	210	90	252	371	0	713	318	24	48	0	390	81	320	54	1	456	1769
Apprch %	36.2	26.2	37.6	0		12.6	35.3	52	0		81.5	6.2	12.3	0		17.8	70.2	11.8	0.2		
Total %	4.3	3.1	4.5	0	11.9	5.1	14.2	21	0	40.3	18	1.4	2.7	0	22	4.6	18.1	3.1	0.1	25.8	
Unshifted	76	55	79	0	210	89	245	369	0	703	314	24	46	0	384	80	312	54	1	447	1744
% Unshifted	100	100	100	0	100	98.9	97.2	99.5	0	98.6	98.7	100	95.8	0	98.5	98.8	97.5	100	100	98	98.6
Bank 1	0	0	0	0	0	1	7	2	0	10	4	0	2	0	6	1	8	0	0	9	25
% Bank 1	0	0	0	0	0	1.1	2.8	0.5	0	1.4	1.3	0	4.2	0	1.5	1.2	2.5	0	0	2	1.4

File Name : PM - Kapolei Prkway at Keoneula Blvd
Site Code : 00000000
Start Date : 5/24/2007
Page No : 1

Groups Printed- Unshifted - Bank 1

	KP From North					KB From East					KP From South					KB From West					
Start Time	Right	Thru	Left	Peds	App. Total	Right	Thru	Left	Peds	App. Total	Right	Thru	Left	Peds	App. Total	Right	Thru	Left	Peds	App. Total	Int. Total
03:00 PM	0	83	20	0	103	17	0	5	0	22	3	79	4	0	86	3	0	1	0	4	215
03:15 PM	3	93	17	0	113	23	0	4	0	27	9	77	2	0	88	12	0	3	0	15	243
03:30 PM	2	95	34	0	131	29	0	5	0	34	10	88	0	0	98	7	4	2	0	13	276
03:45 PM	1	91	33	0	125	23	1	4	0	28	9	71	1	0	81	4	3	1	0	8	242
Total	6	362	104	0	472	92	1	18	0	111	31	315	7	0	353	26	7	7	0	40	976
04:00 PM	1	86	27	0	114	17	0	10	0	27	4	69	0	0	73	0	0	2	0	2	216
04:15 PM	0	102	27	0	129	18	1	5	0	24	3	63	0	0	66	0	1	1	0	2	221
04:30 PM	2	91	29	0	122	15	2	8	0	25	8	57	0	0	65	1	1	0	0	2	214
04:45 PM	0	112	29	0	141	14	0	2	0	16	11	64	0	0	75	1	1	0	0	2	234
Total	3	391	112	0	506	64	3	25	0	92	26	253	0	0	279	2	3	3	0	8	885
05:00 PM	1	88	16	1	106	13	0	7	0	20	5	53	0	0	58	1	1	1	0	3	187
05:15 PM	1	87	21	0	109	19	1	6	0	26	10	66	0	0	76	0	0	0	0	0	211
05:30 PM	0	72	30	0	102	18	1	6	0	25	4	48	1	0	53	1	0	0	0	1	181
05:45 PM	4	83	21	0	108	16	0	5	0	21	4	48	0	0	52	0	0	2	0	2	183
Total	6	330	88	1	425	66	2	24	0	92	23	215	1	0	239	2	1	3	0	6	762
06:00 PM	0	99	18	0	117	23	0	5	0	28	4	48	1	0	53	0	1	0	0	1	199
Grand Total	15	1182	322	1	1520	245	6	72	0	323	84	831	9	0	924	30	12	13	0	55	2822
Apprch %	1	77.8	21.2	0.1		75.9	1.9	22.3	0		9.1	89.9	1	0		54.5	21.8	23.6	0		
Total %	0.5	41.9	11.4	0	53.9	8.7	0.2	2.6	0	11.4	3	29.4	0.3	0	32.7	1.1	0.4	0.5	0	1.9	
Unshifted	13	1165	317	0	1495	239	6	70	0	315	81	811	8	0	900	27	11	13	0	51	2761
% Unshifted	86.7	98.6	98.4	0	98.4	97.6	100	97.2	0	97.5	96.4	97.6	88.9	0	97.4	90	91.7	100	0	92.7	97.8
Bank 1	2	17	5	1	25	6	0	2	0	8	3	20	1	0	24	3	1	0	0	4	61
% Bank 1	13.3	1.4	1.6	100	1.6	2.4	0	2.8	0	2.5	3.6	2.4	11.1	0	2.6	10	8.3	0	0	7.3	2.2

APPENDIX D

SYNCHRO AND SIM TRAFFIC DATA SHEETS

Movement	EBL	EBT	EBR	WBL	WBT	WBR	NBL	NBT	NBR	SBL	SBT	SBR
Lane Configurations												
Ideal Flow (vphpl)	1900	1900	1900	1900	1900	1900	1900	1900	1900	1900	1900	1900
Total Lost time (s)	4.0	4.0		4.0	4.0			4.0	4.0		4.0	4.0
Lane Util. Factor	1.00	0.95		1.00	0.95			1.00	1.00		1.00	1.00
Frt	1.00	0.98		1.00	0.96			1.00	0.85		1.00	0.85
Flt Protected	0.95	1.00		0.95	1.00			0.98	1.00		0.97	1.00
Satd. Flow (prot)	1770	3466		1770	3382			1830	1583		1810	1583
Flt Permitted	0.58	1.00		0.62	1.00			0.81	1.00		0.70	1.00
Satd. Flow (perm)	1076	3466		1163	3382			1507	1583		1303	1583
Volume (vph)	105	117	19	36	134	56	52	95	150	78	55	68
Peak-hour factor, PHF	0.67	0.67	0.67	0.67	0.67	0.67	0.67	0.67	0.67	0.67	0.67	0.67
Adj. Flow (vph)	157	175	28	54	200	84	78	142	224	116	82	101
Lane Group Flow (vph)	157	203	0	54	284	0	0	220	224	0	198	101
Turn Type	Perm			Perm			Perm		Perm	Perm		Perm
Protected Phases		4			8			2			6	
Permitted Phases	4			8			2		2	6		6
Actuated Green, G (s)	14.6	14.6		14.6	14.6			9.1	9.1		9.1	9.1
Effective Green, g (s)	16.6	16.6		16.6	16.6			11.1	11.1		11.1	11.1
Actuated g/C Ratio	0.46	0.46		0.46	0.46			0.31	0.31		0.31	0.31
Clearance Time (s)	6.0	6.0		6.0	6.0			6.0	6.0		6.0	6.0
Vehicle Extension (s)	3.0	3.0		3.0	3.0			3.0	3.0		3.0	3.0
Lane Grp Cap (vph)	500	1612		541	1573			469	492		405	492
v/s Ratio Prot		0.06			0.08							
v/s Ratio Perm	c0.15			0.05				0.15	0.14		c0.15	0.06
v/c Ratio	0.31	0.13		0.10	0.18			0.47	0.46		0.49	0.21
Uniform Delay, d1	6.0	5.4		5.4	5.6			9.9	9.9		10.0	9.1
Progression Factor	1.00	1.00		1.00	1.00			1.00	1.00		1.00	1.00
Incremental Delay, d2	0.4	0.0		0.1	0.1			0.7	0.7		0.9	0.2
Delay (s)	6.3	5.5		5.4	5.6			10.7	10.5		10.9	9.3
Level of Service	A	A		A	A			B	B		B	A
Approach Delay (s)		5.8			5.6			10.6			10.4	
Approach LOS		A			A			B			B	

Intersection Summary

HCM Average Control Delay	8.2	HCM Level of Service	A
HCM Volume to Capacity ratio	0.38		
Actuated Cycle Length (s)	35.7	Sum of lost time (s)	8.0
Intersection Capacity Utilization	52.7%	ICU Level of Service	A

c Critical Lane Group

Kapolei Pkwy at Geiger — AM Future No Build

Movement	EBL	EBT	EBR	WBL	WBT	WBR	NBL	NBT	NBR	SBL	SBT	SBR
Lane Configurations												
Ideal Flow (vphpl)	1900	1900	1900	1900	1900	1900	1900	1900	1900	1900	1900	1900
Total Lost time (s)	4.0	4.0		4.0	4.0		4.0	4.0	4.0	4.0	4.0	
Lane Util. Factor	1.00	1.00		1.00	1.00		1.00	1.00	1.00	1.00	0.95	
Frt	1.00	0.93		1.00	0.96		1.00	1.00	0.85	1.00	0.97	
Flt Protected	0.95	1.00		0.95	1.00		0.95	1.00	1.00	0.95	1.00	
Satd. Flow (prot)	1770	1735		1770	1784		1770	1863	1583	1770	3443	
Flt Permitted	0.95	1.00		0.95	1.00		0.95	1.00	1.00	0.95	1.00	
Satd. Flow (perm)	1770	1735		1770	1784		1770	1863	1583	1770	3443	
Volume (vph)	39	216	180	78	320	127	393	676	65	106	352	78
Peak-hour factor, PHF	0.88	0.88	0.88	0.88	0.88	0.88	0.88	0.88	0.88	0.88	0.88	0.88
Adj. Flow (vph)	44	245	205	89	364	144	447	768	74	120	400	89
Lane Group Flow (vph)	44	450	0	89	508	0	447	768	74	120	489	0
Turn Type	Prot			Prot			Prot		Perm	Prot		
Protected Phases	5	2		1	6		3	8		7	4	
Permitted Phases									8			
Actuated Green, G (s)	2.3	30.9		4.0	32.6		20.1	39.2	39.2	5.0	25.1	
Effective Green, g (s)	4.3	32.9		6.0	34.6		21.1	40.2	40.2	7.0	26.1	
Actuated g/C Ratio	0.04	0.32		0.06	0.34		0.21	0.39	0.39	0.07	0.26	
Clearance Time (s)	6.0	6.0		6.0	6.0		5.0	5.0	5.0	6.0	5.0	
Vehicle Extension (s)	3.0	3.0		3.0	3.0		3.0	3.0	3.0	3.0	3.0	
Lane Grp Cap (vph)	75	559		104	605		366	734	623	121	880	
v/s Ratio Prot	0.02	0.26		c0.05	c0.28		c0.25	c0.41		0.07	0.14	
v/s Ratio Perm									0.05			
v/c Ratio	0.59	0.81		0.86	0.84		1.22	1.05	0.12	0.99	0.56	
Uniform Delay, d1	48.0	31.7		47.6	31.2		40.5	30.9	19.7	47.5	33.0	
Progression Factor	1.00	1.00		1.00	1.00		1.00	1.00	1.00	1.00	1.00	
Incremental Delay, d2	11.2	8.3		45.8	10.0		121.8	46.0	0.1	79.0	0.8	
Delay (s)	59.2	39.9		93.4	41.2		162.3	76.9	19.8	126.5	33.7	
Level of Service	E	D		F	D		F	E	B	F	C	
Approach Delay (s)		41.6			48.9			103.2			52.0	
Approach LOS		D			D			F			D	

Intersection Summary			
HCM Average Control Delay	71.8	HCM Level of Service	E
HCM Volume to Capacity ratio	0.95		
Actuated Cycle Length (s)	102.1	Sum of lost time (s)	8.0
Intersection Capacity Utilization	91.7%	ICU Level of Service	E
c Critical Lane Group			

Kapolei Pkwy at Kaioli — AM Existing 2007

Movement	EBL	EBT	EBR	WBL	WBT	WBR	NBL	NBT	NBR	SBL	SBT	SBR
Lane Configurations												
Sign Control		Stop			Stop			Free			Free	
Grade		0%			0%			0%			0%	
Volume (veh/h)	14	1	31	0	1	28	43	645	2	12	418	6
Peak Hour Factor	0.87	0.87	0.87	0.87	0.87	0.87	0.87	0.87	0.87	0.87	0.87	0.87
Hourly flow rate (veh/h)	16	1	36	0	1	32	49	741	2	14	480	7
Pedestrians												
Lane Width (ft)												
Walking Speed (ft/s)												
Percent Blockage												
Right turn flare (veh)												
Median type		None			None							
Median storage veh)												
Upstream signal (ft)												
pX, platoon unblocked												
vC, conflicting volume	1014	1354	244	1145	1356	372	487			744		
vC1, stage 1 conf vol												
vC2, stage 2 conf vol												
vCu, unblocked vol	1014	1354	244	1145	1356	372	487			744		
tC, single (s)	7.5	6.5	6.9	7.5	6.5	6.9	4.1			4.1		
tC, 2 stage (s)												
tF (s)	3.5	4.0	3.3	3.5	4.0	3.3	2.2			2.2		
p0 queue free %	91	99	95	100	99	95	95			98		
cM capacity (veh/h)	173	139	757	139	139	625	1072			860		

Direction, Lane #	EB 1	EB 2	WB 1	WB 2	NB 1	NB 2	NB 3	SB 1	SB 2	SB 3
Volume Total	16	37	0	33	49	494	249	14	320	167
Volume Left	16	0	0	0	49	0	0	14	0	0
Volume Right	0	36	0	32	0	0	2	0	0	7
cSH	173	665	1700	558	1072	1700	1700	860	1700	1700
Volume to Capacity	0.09	0.06	0.00	0.06	0.05	0.29	0.15	0.02	0.19	0.10
Queue Length (ft)	8	4	0	5	4	0	0	1	0	0
Control Delay (s)	27.9	10.7	0.0	11.9	8.5	0.0	0.0	9.3	0.0	0.0
Lane LOS	D	B	A	B	A			A		
Approach Delay (s)	16.0		11.9		0.5			0.3		
Approach LOS	C		B							

Intersection Summary			
Average Delay	1.3		
Intersection Capacity Utilization	30.6%	ICU Level of Service	A

Kapolei Pkwy at Keoneula

AM Existing
2007

Movement	EBL	EBT	EBR	WBL	WBT	WBR	NBL	NBT	NBR	SBL	SBT	SBR
Lane Configurations												
Sign Control		Stop			Stop			Free			Free	
Grade		0%			0%			0%			0%	
Volume (veh/h)	2	2	14	26	3	210	7	470	50	134	327	12
Peak Hour Factor	0.83	0.83	0.83	0.83	0.83	0.83	0.83	0.83	0.83	0.83	0.83	0.83
Hourly flow rate (veh/h)	2	2	17	31	4	253	8	566	60	161	394	14
Pedestrians												
Lane Width (ft)												
Walking Speed (ft/s)												
Percent Blockage												
Right turn flare (veh)												
Median type		Raised			Raised							
Median storage veh)		1			1							
Upstream signal (ft)												
pX, platoon unblocked												
vC, conflicting volume	1562	1367	204	1151	1345	596	408			627		
vC1, stage 1 conf vol	724	724		613	613							
vC2, stage 2 conf vol	838	643		538	731							
vCu, unblocked vol	1562	1367	204	1151	1345	596	408			627		
tC, single (s)	7.5	6.5	6.9	7.5	6.5	6.9	4.1			4.1		
tC, 2 stage (s)	6.5	5.5		6.5	5.5							
tF (s)	3.5	4.0	3.3	3.5	4.0	3.3	2.2			2.2		
p0 queue free %	0	99	98	87	98	43	99			83		
cM capacity (veh/h)	-29	203	802	248	237	447	1147			951		

Direction, Lane #	EB 1	EB 2	EB 3	WB 1	WB 2	WB 3	NB 1	NB 2	SB 1	SB 2	SB 3
Volume Total	2	2	18	31	2	254	8	627	161	263	146
Volume Left	2	0	0	31	0	0	8	0	161	0	0
Volume Right	0	0	17	0	0	253	0	60	0	0	14
cSH	0	203	708	248	237	445	1147	1700	951	1700	1700
Volume to Capacity	Err	0.01	0.02	0.13	0.01	0.57	0.01	0.37	0.17	0.15	0.09
Queue Length (ft)	Err	1	2	11	1	87	1	0	15	0	0
Control Delay (s)	Err	22.9	10.2	21.6	20.3	23.4	8.2	0.0	9.6	0.0	0.0
Lane LOS	F	C	B	C	C	C	A		A		
Approach Delay (s)	Err			23.1			0.1		2.7		
Approach LOS	F			C							

Intersection Summary			
Average Delay	Err		
Intersection Capacity Utilization	60.7%	ICU Level of Service	B

rogerdgre1-lt51

Intersection Turning Movements

Project: Ewa Middle School TIAR
Scenario: Project with Current Proposed Plan
Time Period: AM

Intersection Name: Kapolei Pkwy at Geiger
Intersection ID: 1

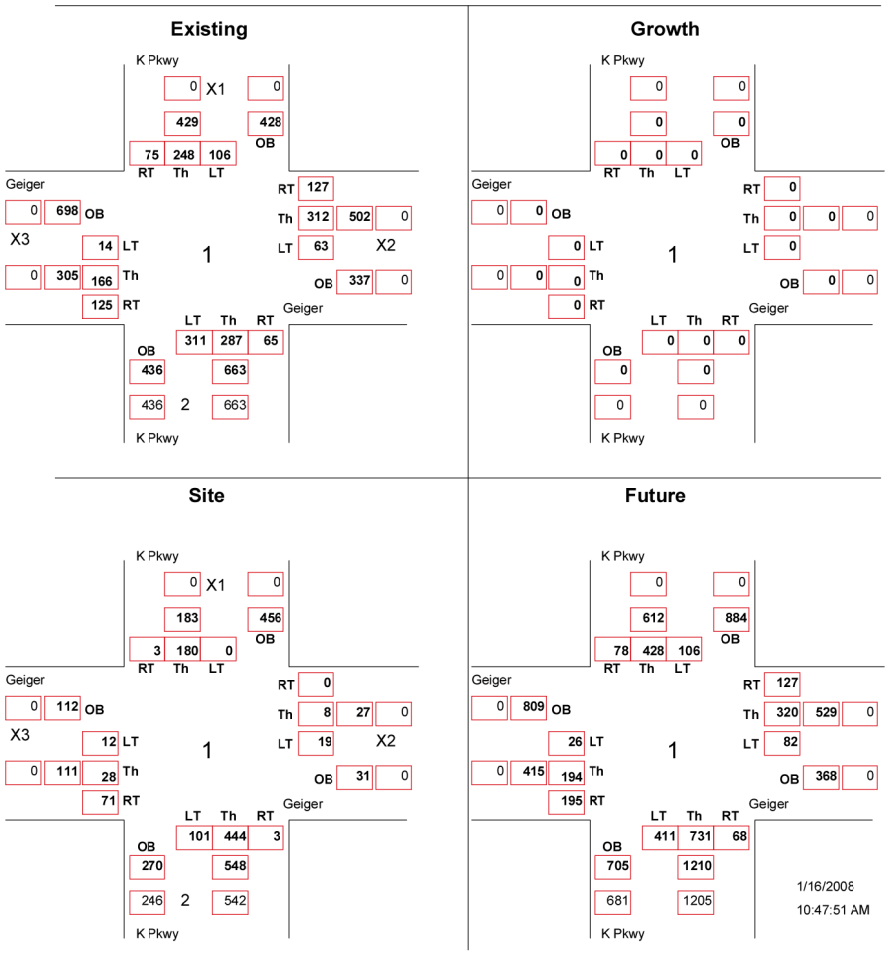

Intersection Turning Movements

Project: Ewa Middle School TIAR
Scenario: Project with Current Proposed Plan
Time Period: AM

Intersection Name: Kapolei Pkwy at School/New Connector to Ft. Weaver Keanui
Intersection ID: 2

Existing

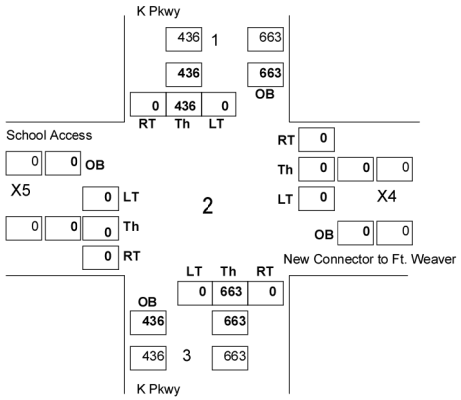

Growth

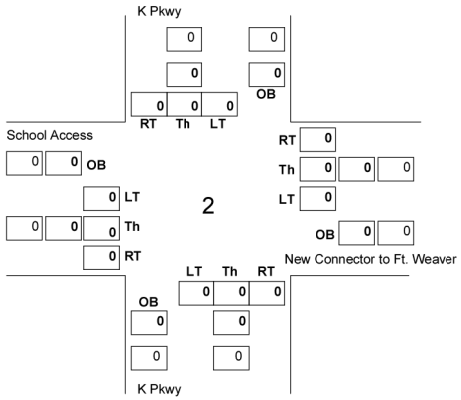

Site

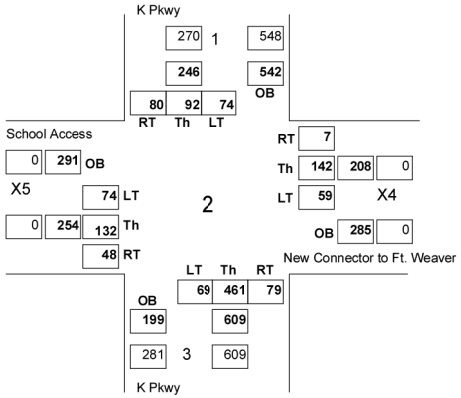

Future

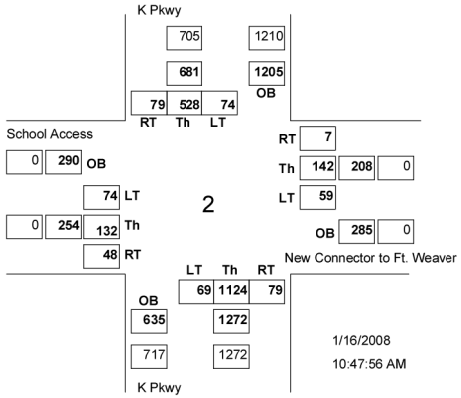

1/16/2008
10:47:56 AM

Intersection Turning Movements

Project: Ewa Middle School TIAR
Scenario: Project with Current Proposed Plan
Time Period: AM

Intersection Name: Kapolei Pkwy at School Right-in/Right-out
Intersection ID: 3

Existing

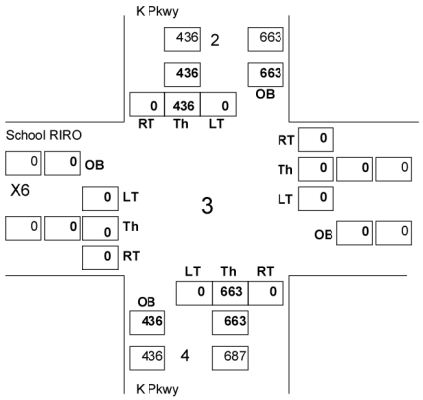

Growth

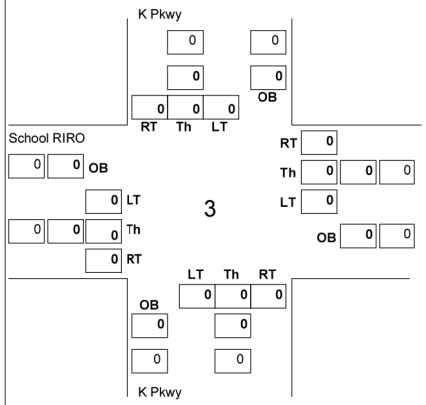

Site

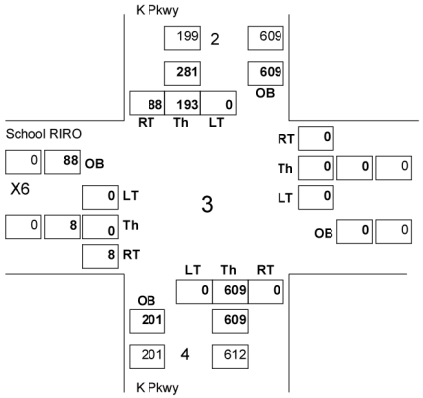

Future

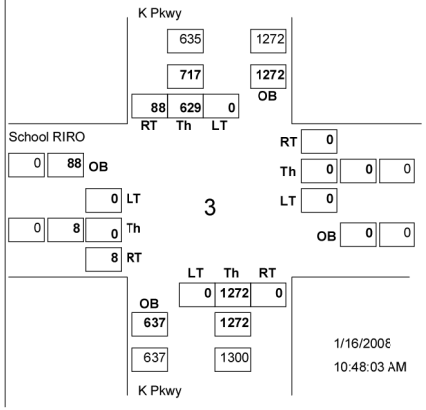

1/16/2008
10:48:03 AM

Intersection Turning Movements

Project: Ewa Middle School TIAR
Scenario: Project with Current Proposed Plan
Time Period: AM

Intersection Name: Kapolei Pkwy at Kaioli
Intersection ID: 4

Existing

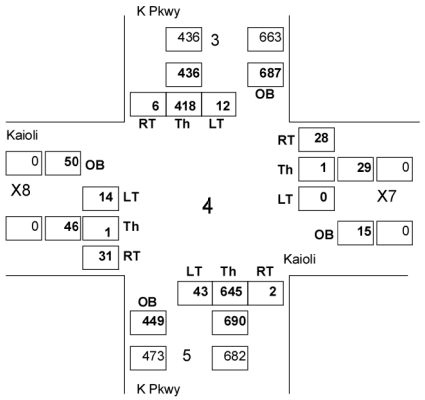

Growth

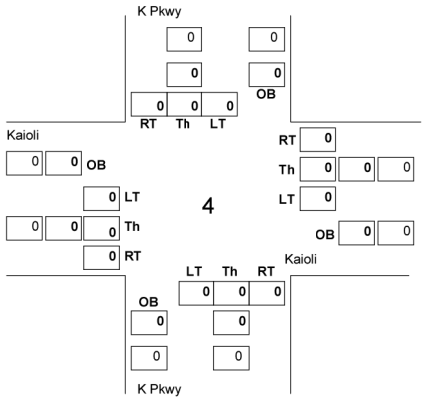

Site

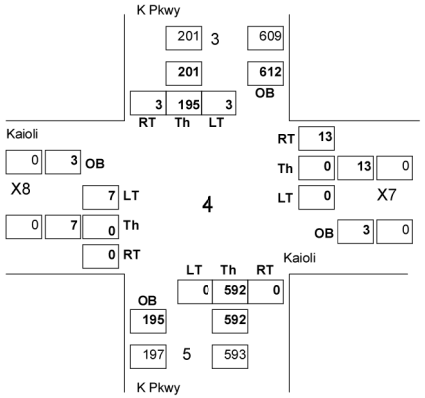

Future

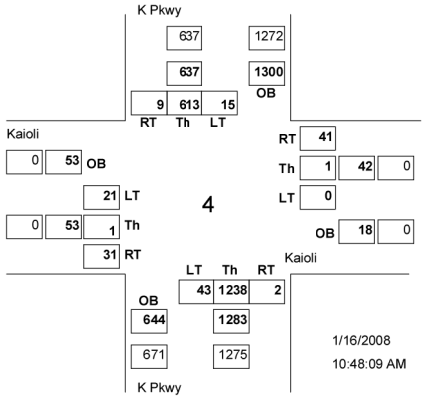

Intersection Turning Movements

Project: Ewa Middle School TIAR
Scenario: Project with Current Proposed Plan
Time Period: AM

Intersection Name: Kapolei Pkwy at Keoneula
Intersection ID: 5

Existing

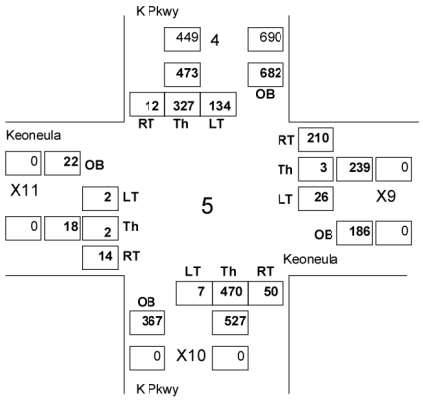

Growth

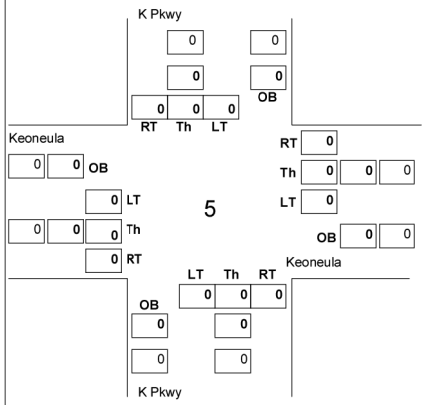

Site

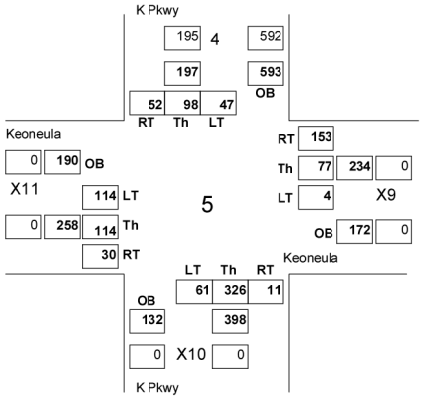

Future

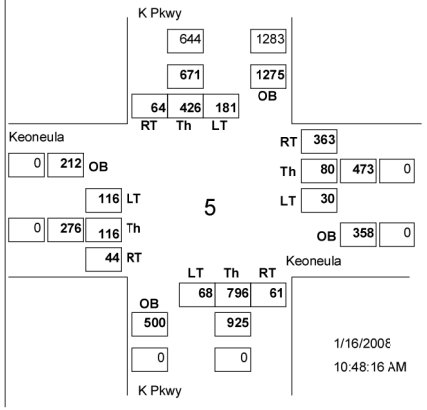

Intersection Turning Movements

Project: Ewa Middle School TIAR
Scenario: Project with Current Proposed Plan
Time Period: AM

Intersection Name: Keoneula at Kaileolea
Intersection ID: 6

Existing

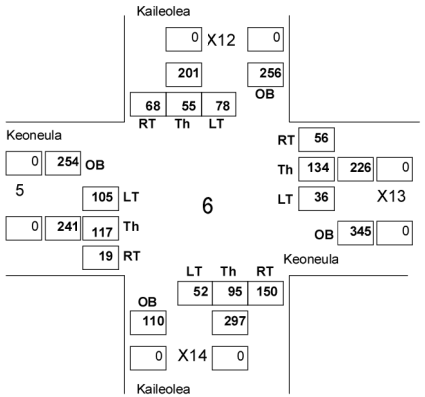

Growth

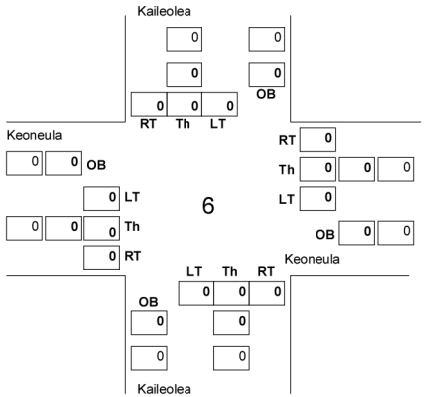

Site

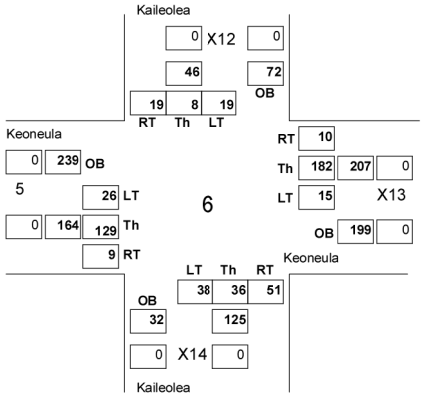

Future

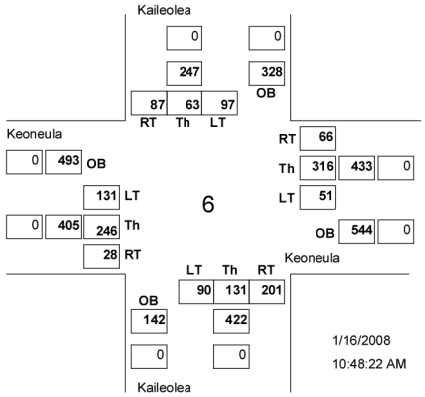

1/16/2008
10:48:22 AM

Intersection Turning Movements

Project: Ewa Middle School TIAR
Scenario: Project with Current Proposed Plan
Time Period: PM

Intersection Name: Kapolei Pkwy at Geiger
Intersection ID: 1

Existing

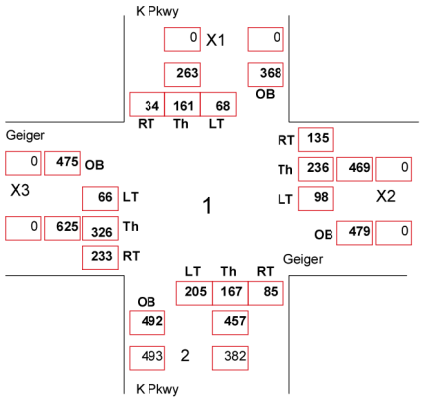

Growth

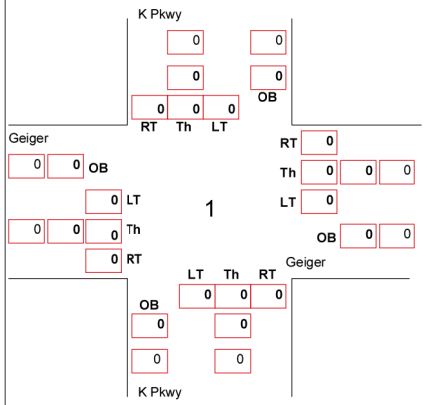

Site

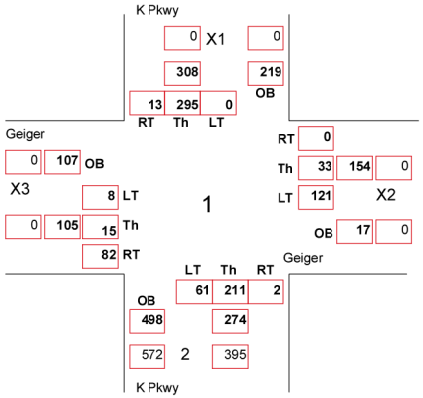

Future

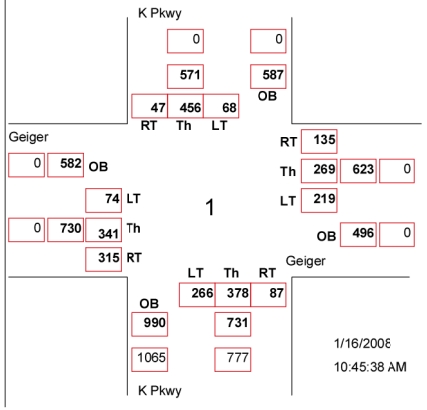

1/16/2008
10:45:38 AM

Intersection Turning Movements

Project: Ewa Middle School TIAR
Scenario: Project with Current Proposed Plan
Time Period: PM

Intersection Name: Kapolei Pkwy at School/New Connector to Ft. Weaver Keanui
Intersection ID: 2

Existing

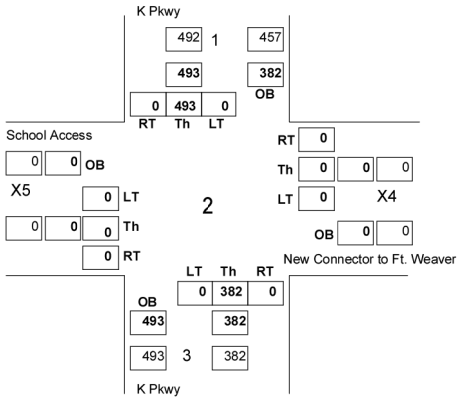

Growth

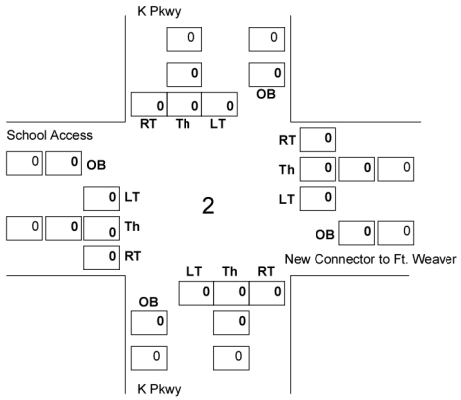

Site

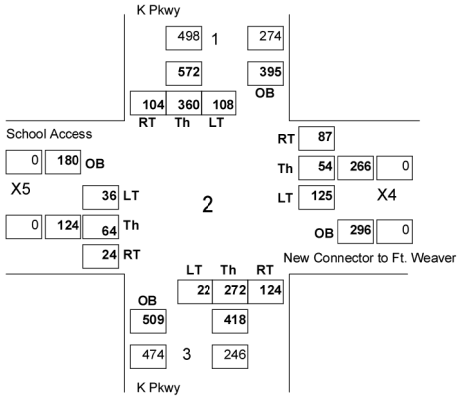

Future

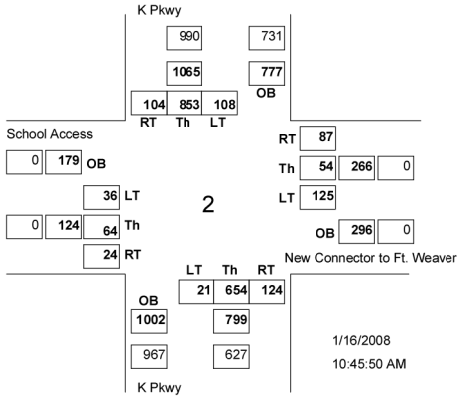

1/16/2008
10:45:50 AM

Intersection Turning Movements

Project: Ewa Middle School TIAR
Scenario: Project with Current Proposed Plan
Time Period: PM

Intersection Name: Kapolei Pkwy at School Right-in/Right-out
Intersection ID: 3

Existing

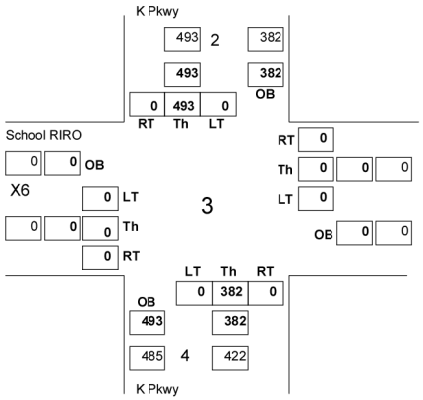

Growth

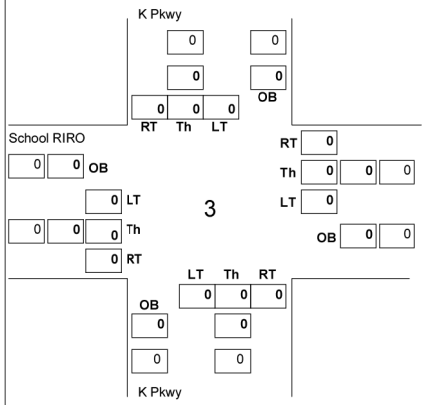

Site

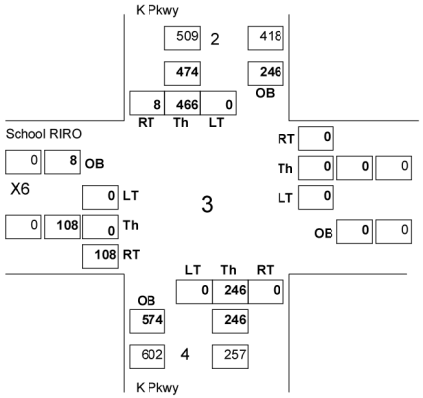

Future

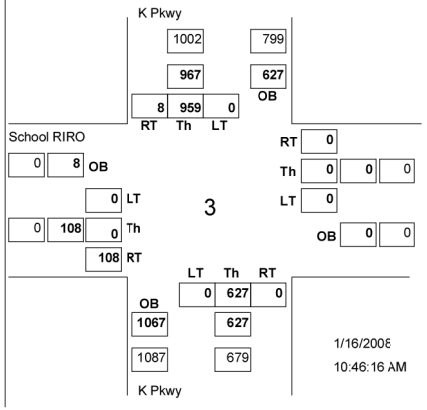

1/16/2008
10:46:16 AM

Intersection Turning Movements

Project: Ewa Middle School TIAR
Scenario: Project with Current Proposed Plan
Time Period: PM

Intersection Name: Kapolei Pkwy at Kaioli
Intersection ID: 4

Existing

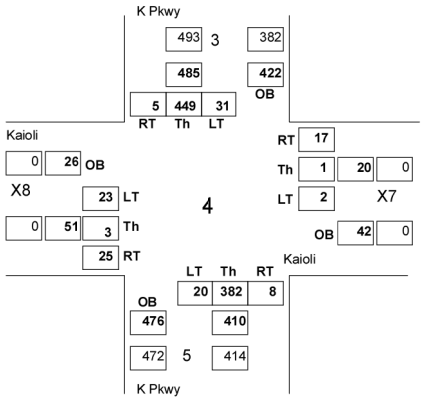

Growth

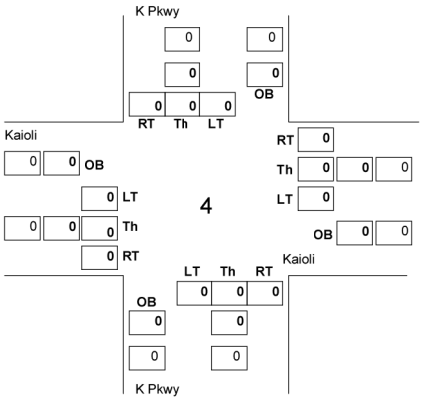

Site

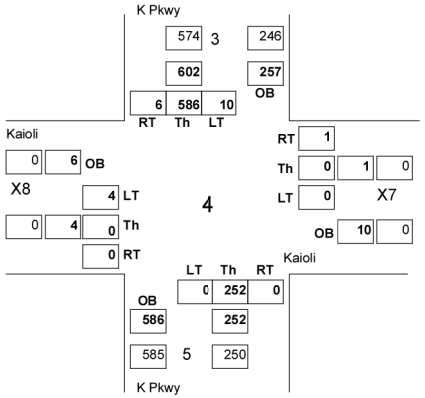

Future

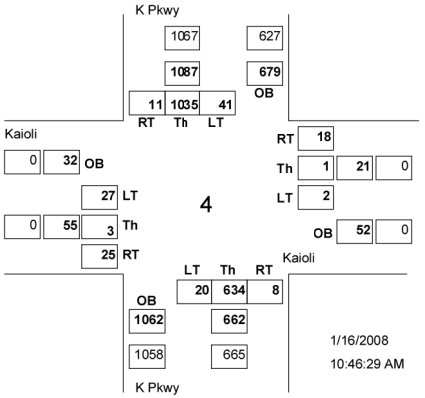

Intersection Turning Movements

Project: Ewa Middle School TIAR
Scenario: Project with Current Proposed Plan
Time Period: PM

Intersection Name: Kapolei Pkwy at Keoneula
Intersection ID: 5

Existing

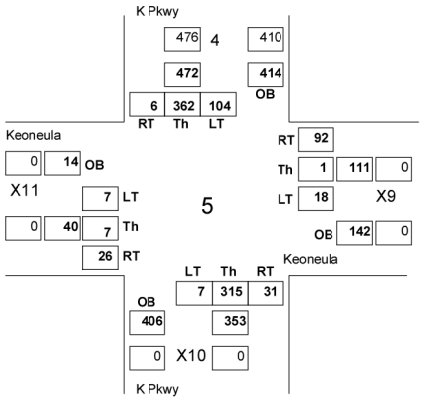

Growth

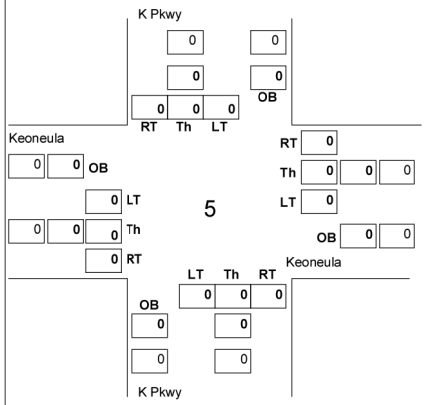

Site

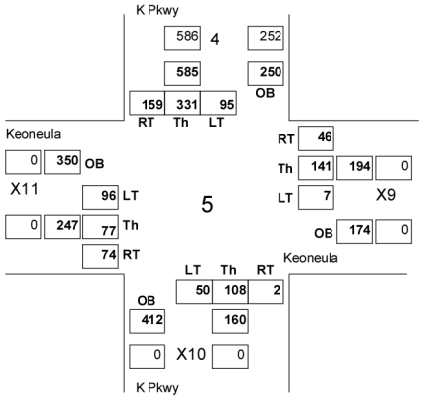

Future

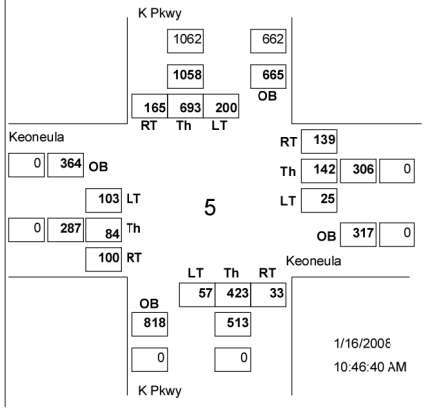

Intersection Turning Movements

Project: Ewa Middle School TIAR
Scenario: Project with Current Proposed Plan
Time Period: PM

Intersection Name: Keoneula at Kaileolea
Intersection ID: 6

Existing

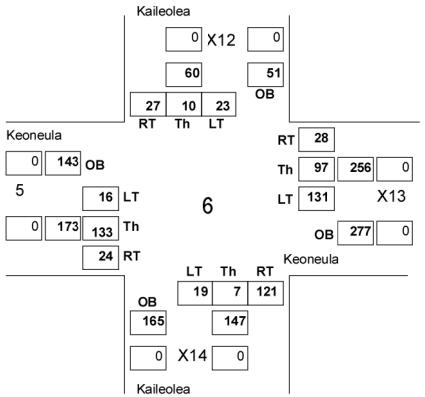

Growth

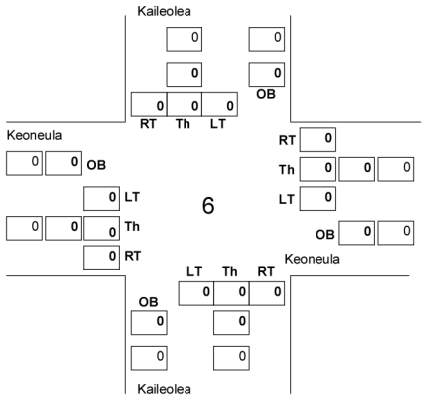

Site

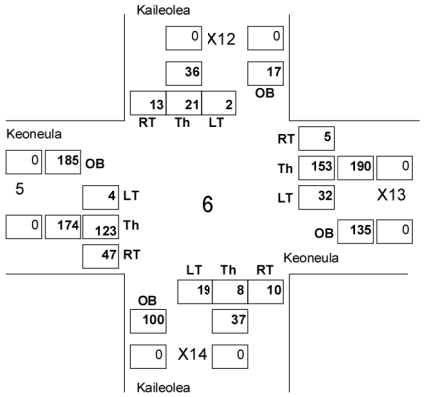

Future

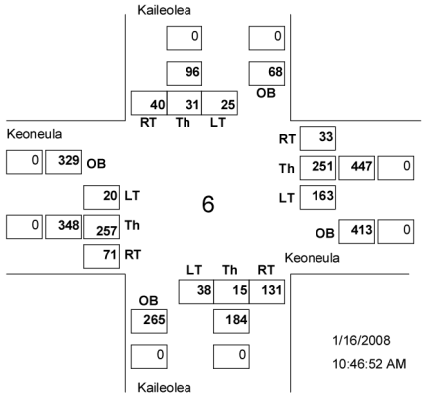

1/16/2008
10:46:52 AM

PHASE II ENVIRONMENTAL SITE ASSESSMENT
PROPOSED EWA MAKAI MIDDLE SCHOOL LOCATION
LOT 16887, MAP 1304
(LAND COURT APPLICATION NO. 1069)
ISLAND OF OAHU, HAWAII

TMK (1) 9-1-069:027

MNA JOB NO. 20691

OCTOBER 23, 2008

Environmental Studies and Consulting Services

99-1046 Iwaena St. Suite 210A, Aiea, Hawaii, USA 96701 • 808.484.9214
94 Kohola Street, Hilo Hawaii, USA 96720 • 808.935.8727

This Phase II ESA is prepared for:

SSFM International, Inc.
501 Summer Street, Suite 620
Honolulu, HI 96817

Phase II Environmental Site Assessment for Proposed Ewa Makai Middle School Location Lot 16887, Map 1304 (Land Court Application No. 1069) Island of Oahu, Hawaii TMK (1) 9-1-069:027

MNA Job No. 20691

October 21, 2008

Eunjin Kotkovetz
Environmental Engineer

Myounghee Noh
Consulting Chemist

Myounghee Noh & Associates, L.L.C.
99-1046 Iwaena Street, Suite 210A
Aiea, Hawaii 96701
Tel (808) 484-9214
Fax (808) 484-4660
Toll free (888) 747-8448
www.noh-associates.com

TABLE OF CONTENTS

TITLE PAGE i
TABLE OF CONTENTS ii
1.0 EXECUTIVE SUMMARY 1
1.1 Sampling and Analysis 1
1.2 Results and Conclusions 1
2.0 INTRODUCTION 3
2.1 Purpose 3
2.2 Data Quality Objective 3
3.0 SAMPLING 3
3.1 Sampling Grid 3
3.2 Surface MIS 7
3.3 Subsurface MIS 7
3.4 Preservation 7
3.5 Quality Control 7
3.6 Transportation 8
3.7 Decontamination 8
3.8 Investigation Derived Waste 8
4.0 ANALYSIS 8
5.0 RESULTS AND DISCUSSION 9
6.0 DATA QUALITY REVIEW 11
6.1 Holding Times 11
6.2 Laboratory Blank Results 11
6.3 Laboratory Performance Review 11
6.4 Field Performance Review 11
7.0 CONCLUSIONS 12
8.0 REFERENCES 12

TABLES

Table 1. Summary of Soil Sampling and Analysis 3
Table 2. Summary of Soil Sample Results & Tier 1 EALs 10
Table 3. Triplicate Data Comparison 11

FIGURES

Figure 1. Site Location 4
Figure 2. Surface Increment Sampling Points 5
Figure 3. Surbsurface Increment Sampling Points 6

APPENDICES

Appendix A Laboratory Analytical Report
Appendix B Site Photographs

LIST OF ABBREVIATIONS

bgs	below ground surface
CERCLA	Comprehensive Environmental Response, Compensation, and Liability Act
DU	Decision Unit
EAL	Environmental Action Level
EPA	Environmental Protection Agency
ESA	Environmental Site Assessment
HDOH	Hawaii Department of Health
HEER	Hazard Evaluation and Emergency Response
IDW	Investigation Derived Waste
mg/kg	milligrams per kilogram
MIS	Multi-Increment Sampling/Sample
MNA	Myounghee Noh & Associates, L.L.C.
PPE	Personal Protective Equipment
QC	Quality Control
RCRA	Resource Conservation and Recovery Act
REC	Recognized Environmental Condition
SVOCs	Semivolatile Organic Compounds
TMK	Tax Map Key
TPH-DRO	Total Petroleum Hydrocarbons as Diesel Range Organics
VOCs	Volatile Organic Compounds

1.0 EXECUTIVE SUMMARY

Myounghee Noh & Associates, L.L.C. (MNA), was retained to conduct a Phase II Environmental Site Assessment (ESA) at the Proposed Ewa Makai Middle School Location at Lot 16887, Map 1304, TMK (1) 9-1-069:027 (Figure 1). This Phase II ESA was conducted by Myounghee Noh & Associates, L.L.C., herein referred to as MNA, for SSFM International, Inc., 501 Sumner Street, Suite 620, Honolulu, HI, 96817.

The purpose of this Phase II ESA was to confirm the presence or absence of any *recognized environmental conditions (REC)* at the subject property. Additionally, the purpose of this ESA was to identify potential risks from environmental contaminants, if any, to construction workers and occupants of Ewa Makai Middle School.

1.1 Sampling and Analysis

A multi-incremental sampling (MIS) technique was implemented to collect samples from surface at 0-2 inch below ground surface (bgs) and subsurface at 2-2.5 ft bgs and 5-5.5 ft bgs at the subject school site.

Prior to the sampling, MNA established grid systems which resulted in 50 surface soil sampling points (increments), and 30 subsurface sampling points. The sample locations are depicted in Figure 2 and Figure 3, respectively.

The surface soil increments were collected using a Terra Core sampler from the 50 sampling points. For the 2-2.5 ft bgs, and 5-5.5 ft bgs MIS, MNA used direct-push drill rig with a split spoon sampler. The direct-push drill rig encountered refusal at nine sampling points at about 2 ft bgs, and at seven sampling points at about 4 ft bgs. Therefore, 21 increments were collected from the 2-2.5 ft bgs and 14 increments from the 5-5.5 ft bgs.

All MIS samples were analyzed for Total Petroleum Hydrocarbons – Diesel Range Organics (TPH-DRO), Volatile Organic Compounds (VOCs), Semi-Volatile Organic Compounds (SVOCs), and Resource Conservation and Recovery Act (RCRA) Metals (arsenic, barium, cadium, chromium, lead, mercury, selenium, and silver), pesticides, and herbicides.

1.2 Results and Conclusions

The analytical results were compared to the Hawaii Department of Health (HDOH) Environmental Action Levels (EALs) for soil with unrestricted land use above a non-drinking water resource and greater than 150 meters from surface water.

<u>DU1-S0 (Surface MIS, 50 increments)</u>
Low levels of TPH-DRO, metals (arsenic, barium, chromium, and mercury), and pesticides (4,4'-DDE, heptachlor epoxide, alpha- and gamma-chlordane) were detected. All were below the EALs.

DU1-S2.5-1 (2-2.5 ft bgs MIS, 21 increments)
Low levels of metals (arsenic, barium, chromium, and mercury), a herbicide (pentachlorophenol), and pesticides (heptachlor epoxide and gamma-chlordane) were detected, but all were well below the EALs.

DU1-S5.5 (5-6 ft bgs MIS, 14 increments)
Low levels of metals (barium, chromium, and mercury) and a pesticide (gamma-chlordane) were detected but all were well below the EALs.

Based on sampling and analysis of 0-2 inch surface, 2-2.5 ft bgs, and 5-6 ft bgs MIS soil samples, MNA concludes that *recognized environmental conditions* do not exist within the proposed Ewa Makai Middle School Location with respect to the selected EALs. No further investigation is recommended.

2.0 INTRODUCTION

Myounghee Noh & Associates, L.L.C. (MNA), was retained to conduct a Phase II Environmental Site Assessment (ESA) at the Proposed Ewa Makai Middle School Location at Lot 16887, Map 1304, TMK (1) 9-1-69-027 (Figure 1). This Phase II ESA was conducted by Myounghee Noh & Associates, L.L.C., herein referred to as MNA, for SSFM International, Inc., 501 Sumner Street, Suite 620, Honolulu, HI, 96817.

2.1 Purpose

The purpose of this Phase II ESA was to confirm the presence or absence of any *recognized environmental conditions (REC)* at the subject property. Additionally, the purpose of this ESA was to identify potential risks from environmental contaminants, if any, to construction workers and occupants of the proposed Ewa Makai Middle School.

2.2 Data Quality Objective

The Data Quality Objective (DQO) is to determine if any environmental hazards exist during and after the construction and to answer the question "Will there be any contaminants that may have an impact on the site workers and cause an indoor air scenario?" The decision unit was defined as the footprint of the proposed school site.

3.0 SAMPLING

This section describes various aspects of the sampling conducted by MNA during September 16-17, 2008. Analytical methods and results are presented in Section 4.0 and Section 5.0, respectively. No groundwater was encountered.

3.1 Sampling Grid

The entire subject site, approximately 1,450 ft x 720 ft, was defined as one decision unit (DU) based on the assumed former agricultural use of the site, and two grid systems were used for 50 surface and 30 subsurface MIS samples. Soil sampling and analysis are summarized in Table 1.

Table 1. Summary of Soil Sampling and Analysis

Sample Type	Sample ID	Depth (bgs)	Planned increments	Increments collected	Analytes
Surface MIS	DU1-S0	0-2 inch	50	50	TPH-DRO VOCs SVOCs RCRA metals Pesticides Herbicides
Subsurface MIS	DU1-S2.5-1	2-2.5 ft	30	21	
	DU1-S5.5	5-5.5 ft	30	14	
QC MIS	DU1-S2.5-2	2-2.5 ft	30	21	
	DU1-S2.5-3	2-2.5 ft	30	21	

Figure 1. Site Location

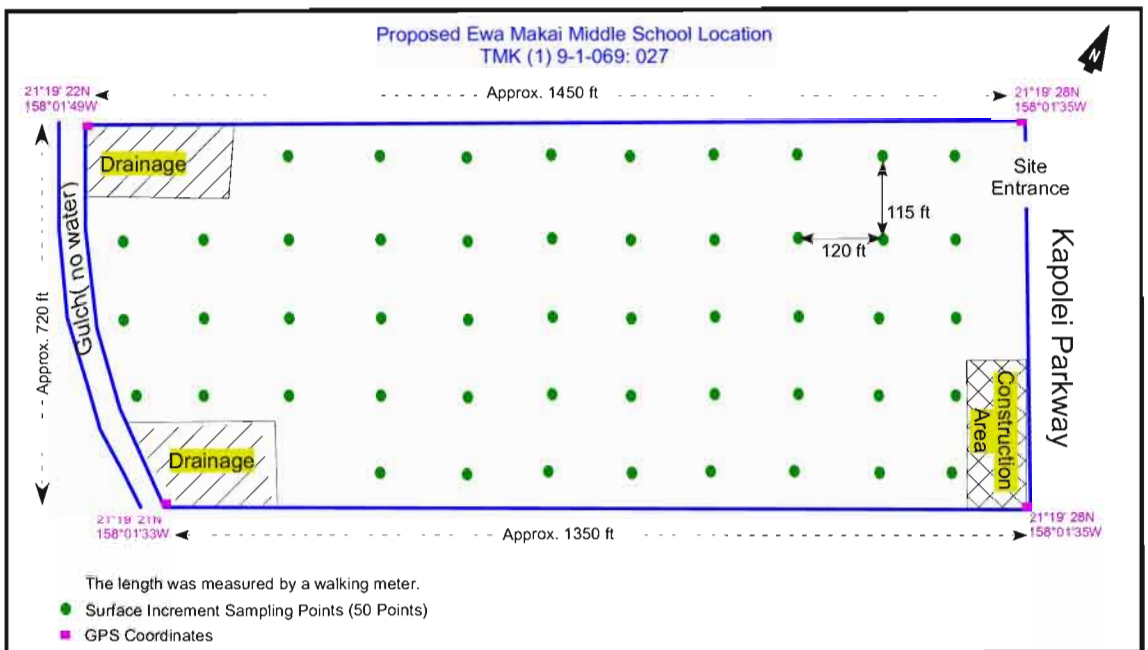

Figure 2. Surface Increment Sampling Points

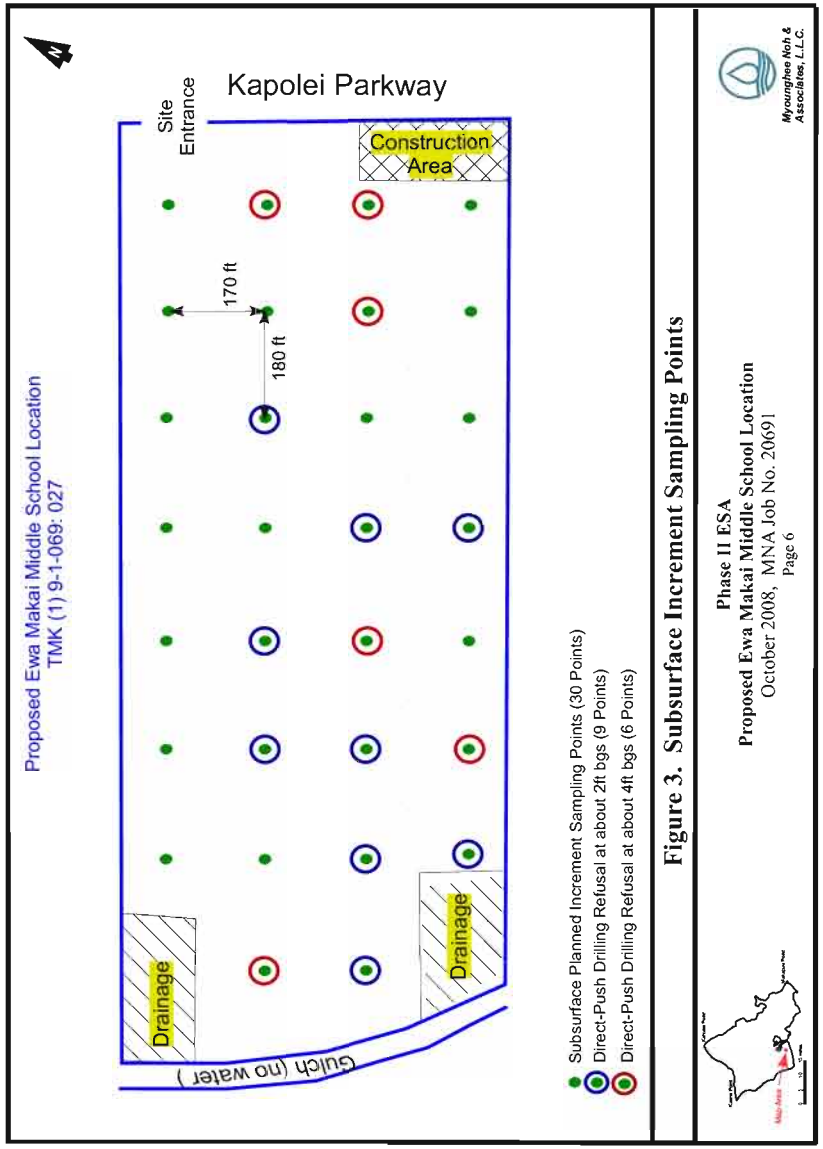

Figure 3. Subsurface Increment Sampling Points

Phase II ESA
Proposed Ewa Makai Middle School Location
October 2008, MNA Job No. 20691
Page 6

Myounghee Noh & Associates, L.L.C.

3.2 Surface MIS

On September 16, 2008, MNA collected one surface MIS containing 50 soil increments. The surface of the subject site was covered with foreign crushed paper material (dust control assumed). Before incremental soil sampling, MNA removed the paper material at each sampling point. The surface soil was collected from 0-2 inchs bgs using 10-gram Terra Core samplers. MNA collected 10 gram soil samples for VOCs analysis at each point and placed them all in a 500-mL amber bottle containing methanol. MNA then collected 30 gram soil samples and placed then all in a sealable plastic bag for the analysis of TPH-DRO, SVOCs, RCRA metals, pesticides, and herbicides. The surface MIS was labeled as DU1-S0.

3.3 Subsurface MIS

On September 17, 2008, MNA performed subsurface multi-incremental sampling. Prior to sampling, subsurface utilities were checked at the 30 increment sampling points using a toner. MNA collected subsurface MISs at the depth of 2-2.5 ft bgs and 5-5.5 bgs.

MNA used a direct-push drill rig with a split spoon sampler to observe and collect the subsurface soil. MNA advanced the direct-push equipment at 30 incremental sampling points. The direct-push encountered refusal from nine sampling points at about 2 ft bgs, and from seven sampling points at about 4 ft bgs. Therefore, MNA collected 21 increments from 2-2.5 ft bgs and 14 increments from 5-5.5 ft bgs (Table 1)

Once the required depth was achieved, a 10-gram soil sample for VOCs analysis was immediately collected using a 10-gram Terra Core sampler and placed into a 500-mL amber bottle containing methanol. MNA then collected a 50-gram soil sample at each sampling point and placed them all into a sealable plastic bag for the analysis of TPH-DRO, SVOCs, RCRA metals, pesticides, and herbicides. The subsurface MISs were labeled as DU1-S2.5 and DU1-S5.5, respectively.

3.4 Preservation

All samples were labeled and recorded in a chain of custody document. Samples were placed in a cooler and chilled to 4°C with wet ice for transport to the analytical laboratory. VOC samples were preserved in amber bottles containing methanol and chilled in the cooler.

3.5 Quality Control

Several measures were taken to ensure the integrity of the samples and the quality analytical data as follows:

- Triplicate MISs were collected from the 2-2.5 ft bgs soil to support the repeatability of the sampling technique and analytical practice and representativeness of the subject site
- Temperature blanks were kept with each sample cooler to ensure samples were properly preserved

- A trip blank sample was transported with the VOA sample containers from the field to the laboratory and analyzed for VOCs to ensure that cross-contamination had not occured

3.6 Transportation

Samples were packed in a cooler chilled with wet ice. The cooler was transported under chain-of-custody to the analytical laboratory Test America located at 99-193 Aiea Heights Drive, Suite 121 Aiea, Hawaii.

3.7 Decontamination

Decontamination needs were eliminated by using a disposable sampling tool, Terra Core. Drilling equipment was decontaminated between sample collections using a four-step process as outlined below:

- Removed gross soil and materials
- Washed with Liquinox®
- Rinsed with tap water
- Rinsed with distilled water

3.8 Investigation Derived Waste

Investigation derived waste (IDW) was minimized through the selection of sampling techniques and the use of disposable sampling equipment. IDW included soil, decontamination water, disposable personal protective equipment (PPE), and disposable sampling tools. IDW soil was generated during the investigation and was used to backfill the borings. Approximately three gallons of decontamination wastewater was generated and was transported to the MNA's Aiea facility. Less than one trash bag of PPE and disposable sampling tools were generated and disposed of in a municipal waste dumpster.

4.0 ANALYSIS

The MIS soil samples were analyzed by Test America, a lab that is validated by the U.S. Navy Facility Engineering Service Center.

Surface, subsurface, and subsurface QC MISs were analyzed for:

- Total petroleum hydrocarbons as diesel range organics (TPH-DRO) by the Environmental Protection Agency (EPA) Method 8015M
- Volatile organic compounds (VOCs) by the EPA Method 8260C
- Semivolatile organic compounds (SVOCs) by the EPA Method 8270B
- RCRA metals (arsenic, barium, cadmium, chromium, lead, mercury, selenium, and silver) by the EPA Methods 6010/7000
- Pesticides by the EPA 8081A
- Herbicides by the EPA 8151A

5.0 RESULTS AND DISCUSSION

Analytical results were received from Test America and are summarized in Table 2. The contaminants presented in Table 2 are those detected from the laboratory analysis. The complete analytical report is included in Appendix A.

The analytical results were compared to the Hawaii Department of Health (DOH) Environmental Action Levels (EALs) for soil with unrestricted land use above a non-drinking water resource and greater than 150 meters from surface water.

<u>DU1-S0 (Surface MIS)</u>
Low levels of TPH-DRO, metals (arsenic, barium, chromium, and mercury), and pesticides (4,4'-DDE, heptachlor epoxide, alpha- and gamma-chlordane) were detected. All were below the EALs. But arsenic was detected 18.8 mg/kg. This arsenic concentration approaches the EAL that is 20 mg/kg. VOCs and SVOCs were not detected at DU1-S0.

<u>DU1-S2.5-1 (2-2.5 ft bgs MIS)</u>
Low levels of metals (arsenic, barium, chromium, and mercury), herbicides (pentachlorophenol), and pesticides (heptachlor epoxide and gamma-chlordane) were detected, but all were well below the EALs. TPH-DRO, VOCs, and SVOCs were not detected at DU1-S2.5-1.

<u>DU1-S5.5 (5-6 ft bgs MIS)</u>
Low levels of metals (barium, chromium, and mercury) and a pesticide (gamma-chlordane) were detected but well below the EALs. TPH-DRO, VOCs, and SVOCs were not detected at DU1-S5.5.

<u>DU1-S2.5-2 and DU1-S2.5-3 (QC MISs at 2-2.5 ft bgs)</u>
The analytical results of two QC MISs at 2-2.5 ft bgs were compared with the results of DU1-S2.5-1. Arsenic, barium, chromium, mercury, pentachlorophenol, heptachlor epoxide, and gamma-chlordane were detected in similar concentrations from all three MISs but their concentrations were well below the EALs. TPH-DRO and lead were detected at DU1-S2.5-2, but the concentrations were also below the EALs.

Table 2. Summary of Soil Sample Results & Tier 1 EALs

Sample ID (Depth)	Contaminants detected	Concentration (mg/kg)	Tier 1 EALs* (mg/kg)	Tier 1 Exceeded?
DU1-S0 (0-2 inch bgs)	TPH-DRO	7.29	500	No
	Arsenic	18.8	20	No
	Barium	94.6	750	No
	Chromium	81	500	No
	Mercury	0.0825	4.7	No
	4,4'-DDE (Pesticide)	0.0024	1.4	No
	Heptachlor epoxide (Pesticide)	0.001	0.046	No
	alpha-chlordane (Pesticide)	0.00038	7	No
	gamma-chlordane (Pesticide)	0.0013	7	No
DU1-S2.5-1 (2-2.5 ft bgs)	Arsenic	10.9	20	No
	Barium	58.7	750	No
	Chromium	38.1	500	No
	Mercury	0.0504	4.7	No
	Pentachlorophenol (Herbicide)	0.0034	3	No
	Heptachlor epoxide	0.00046	0.046	No
	gamma-chlordane	0.00054	7	No
DU1-S5.5 (5-5.5 ft bgs)	Barium	33.1	750	No
	Chromium	22.3	500	No
	Mercury	0.00881	4.7	No
	gamma-chlordane	0.00063	7	No
DU1-S2.5-2 (2-2.5 ft bgs)	TPH-DRO	6.39	500	No
	Arsenic	10.7	20	No
	Barium	61.8	750	No
	Chromium	36	500	No
	Lead	21.2	200	No
	Mercury	0.0416	4.7	No
	Pentachlorophenol	0.0049	3	No
	Heptachlor epoxide	0.00054	0.046	No
	gamma-chlordane	0.00053	7	No
DU1-S2.5-3 (2-2.5 ft bgs)	Arsenic	12.8	20	No
	Barium	64.5	750	No
	Chromium	41.7	500	No
	Mercury	0.0477	4.7	No
	Pentachlorophenol	0.0048	3	No
	Heptachlor epoxide	0.00042	0.046	No
	gamma-chlordane	0.00054	7	No

*HDOH-HEER, Summer 2008

6.0 DATA QUALITY REVIEW

6.1 Sample Holding Times

Technical holding times for all TPH-DRO, SVOC, metals, and VOC analyses were met.

6.2 Laboratory Blank Results

None of the TPH-DRO, SVOC, metals, and VOC analytes were found in the laboratory blank sample which indicated that the analytical processes were free of the contaminants.

6.3 Laboratory Performance Review

Based on the laboratory duplicate, laboratory control sample (LCS), and matrix spike/matrix spike duplicate (MS/MSD) quality control results, the overall analytical approach (preparative, cleanup, and determinative methods) to the sample matrix from the Ewa Makai Middle School site was applicable. The MS/MSD results were helpful in evaluating method performance in the Ewa Makai Middle School sample matrix.

6.4 Field Performance Review

Based on the analysis of the triplicate samples collected at 2-2.5 ft bgs, the overall results were within 20% agreement, except for the TPH-DRO results. For TPH-DRO and lead results, laboratory reporting limits were used in calculations of standard deviation (STDEV), average, and relative percent difference (RPD) (Table 3).

Table 3. Triplicate Data Comparison

Contaminants detected	DU1-S2.5-1 (mg/Kg)	DU1-S2.5-2 (mg/Kg)	DU1-S2.5-3 (mg/Kg)	STDEV	AVG	RPD
TPH-DRO	<3.91*	6.39	<3.93*	1.426090	4.74333	30%
Arsenic	10.9	10.7	12.8	1.159023	11.46667	10%
Barium	58.7	61.8	64.5	2.902298	61.66667	5%
Chromium	38.1	36	41.7	2.882707	38.60000	7%
Lead	<18.5*	21.2	<19.4*	1.374773	19.70000	7%
Mercury	0.0504	0.0416	0.0477	0.004508	0.04657	10%
Pentachlorophenol	0.0034	0.0049	0.0048	0.000839	0.00437	19%
Heptachlor epoxide	0.00046	0.00054	0.00042	0.000061	0.00047	13%
gamma-Chlordane	0.00054	0.00053	0.00054	0.000006	0.00054	1%

*The laboratory reporting limits were used in calculations for those not-detected results.
STDEV – Standard deviation
AVG – Average
RPD – Relative percent difference

7.0 CONCLUSIONS

Based on the analysis of surface (0-2 inch bgs) and subsurface (2-2.5 ft and 5-5.5 ft bgs) soil MIS samples, MNA concludes that *recognized environmental conditions* do not exist within the proposed Ewa Makai Middle School Location with respect to the current (summer 2008) EALs. No further investigation is recommended.

8.0 REFERENCES

HDOH-HEER. **2008**, Summer. EAL Surfer: Screening for Environmental Hazards at Sites with Contaminated Soil and Groundwater. Honolulu, HI.

APPENDIX A

Laboratory Analytical Report

TestAmerica
THE LEADER IN ENVIRONMENTAL TESTING
99-193 Aiea Heights Drive, Suite 121 Aiea, HI 96701 * 808-486-5227 * Fax 808-486-2456

October 03, 2008

LABORATORY REPORT

Client:
Myounghee Noh & Associates
99-1046 Iwaena Street - Suite 210A
Aiea, HI 96701
Attn: Adam Custer

Work Order: HRI0096
Project Name: Ewa Makai Middle Phase II
Project Number: Ewa Makai Middle Phase II, 20691
Date Received: 09/18/08

The results listed within this Laboratory Report pertain only to the samples tested in the laboratory. The analyses contained in this report were performed in accordance with the applicable certifications as noted All soil samples are reported on a wet weight basis unless otherwise noted in the report. This Laboratory Report is confidential and is intended for the sole use of TestAmerica and its client. This report shall not be reproduced, except in full, without written permission from TestAmerica.

TestAmerica Analytical Testing Corporation certifies that the analytical results contained herein apply only to the specific sample(s) analyzed

The Chain of Custody, 1 page, is included and is an integral part of this report. This entire report was reviewed and approved for release

If you have any questions relating to this analytical report, please contact your Laboratory Project Manager at 1-(808)486-5227

CASE NARRATIVE: Samples were prepared by incremental subsampling in accordance with the EPA/600/R-03/027 Guidance Document.

Samples were received into laboratory at a temperature of 4 °C.

NELAC states that samples which require thermal preservation shall be considered acceptable if the arrival temperature is within 2 degrees C of the required temperature or the method specified range. For samples with a temperature requirement of 4 degrees C, an arrival temperature from 0 degrees C to 6 degrees C meets specifications. Samples that are delivered to the laboratory on the same day that they are collected may not meet these criteria. In these cases, the samples are considered acceptable if there is evidence that the chilling process has begun, such as arrival on ice.

The reported results were obtained in compliance with the 2003 NELAC standards unless otherwise noted.

Approved By:

Mike D. Solick
Project Manager

NELAC Certification # E87907

TestAmerica
THE LEADER IN ENVIRONMENTAL TESTING
99-193 Aiea Heights Drive, Suite 121 Aiea, HI 96701 * 808-486-5227 * Fax 808-486-2456

Myounghee Noh & Associates
99-1046 Iwaena Street - Suite 210A
Aiea, HI 96701
Adam Custer

Work Order: HRI0096
Project: Ewa Makai Middle Phase II
Project Number: Ewa Makai Middle Phase II, 20691

Received: 09/18/08
Reported: 10/03/08 09:04

SAMPLE IDENTIFICATION	LAB NUMBER	COLLECTION DATE AND TIME
691 DU1-S0	HRI0096-01	09/17/08 11:50
691 DU1-S0-V	HRI0096-02	09/16/08 13:45
691 DU1-S2.5-1	HRI0096-03	09/17/08 17:30
691 DU1-S2.5-2	HRI0096-04	09/17/08 17:30
691 DU1-S2.5-3	HRI0096-05	09/17/08 17:30
691 DU1-S5.5	HRI0096-06	09/17/08 17:30

Myounghee Noh & Associates	Work Order: HRI0096	Received:	09/18/08
99-1046 Iwaena Street - Suite 210A		Reported:	10/03/08 09:04
Aiea, HI 96701	Project: Ewa Makai Middle Phase II		
Adam Custer	Project Number: Ewa Makai Middle Phase II, 20691		

ANALYTICAL REPORT

Analyte	Sample Result	Data Qualifiers	Units	Rpt Limit	Dilution	Date Analyzed	Prep Date	Seq/ Batch	Method
Sample ID: HRI0096-01 (691 DU1-S0 - Solid/Soil)					**Sampled: 09/17/08 11:50**		**Recvd: 09/18/08 13:50**		
Extractable Petroleum Hydrocarbons by 8015M									
DRO	**7.29**		mg/kg	3.93	1	10/01/08 19:40	09/23/08	8123010	SW8015M
Surr: o-Terphenyl (35-120%)	*118 %*					"	"	"	"
Semivolatile Organics by GC/MS									
1,2,4,5-Tetrachlorobenzene	ND		mg/kg	0.328	1	09/26/08 14:09	09/25/08	8125006	SW8270C
1,2,4-Trichlorobenzene	ND		"	0.328	"	"	"	"	"
1,2-Dichlorobenzene	ND		"	0.328	"	"	"	"	"
1,3-Dichlorobenzene	ND		"	0.328	"	"	"	"	"
1,4-Dichlorobenzene	ND		"	0.328	"	"	"	"	"
1-Chloronaphthalene	ND		"	0.328	"	"	"	"	"
1-Methylnaphthalene	ND		"	0.328	"	"	"	"	"
1-Naphthylamine	ND		"	0.656	"	"	"	"	"
2,3,4,6-Tetrachlorophenol	ND		"	0.328	"	"	"	"	"
2,4,5-Trichlorophenol	ND		"	0.328	"	"	"	"	"
2,4,6-Trichlorophenol	ND		"	0.328	"	"	"	"	"
2,4-Dichlorophenol	ND		"	0.328	"	"	"	"	"
2,4-Dimethylphenol	ND		"	0.328	"	"	"	"	"
2,4-Dinitrophenol	ND		"	1.69	"	"	"	"	"
2,4-Dinitrotoluene	ND		"	0.328	"	"	"	"	"
2,6-Dichlorophenol	ND		"	0.328	"	"	"	"	"
2,6-Dinitrotoluene	ND		"	0.328	"	"	"	"	"
2-Chloronaphthalene	ND		"	0.328	"	"	"	"	"
2-Chlorophenol	ND		"	0.328	"	"	"	"	"
2-Methylnaphthalene	ND		"	0.328	"	"	"	"	"
2-Methylphenol (o-Cresol)	ND		"	0.328	"	"	"	"	"
2-Naphthylamine	ND		"	0.656	"	"	"	"	"
2-Nitroaniline	ND		"	0.328	"	"	"	"	"
2-Nitrophenol	ND		"	0.328	"	"	"	"	"
2-Picoline	ND		"	0.328	"	"	"	"	"
3,3'-Dichlorobenzidine	ND		"	0.328	"	"	"	"	"
3,4-Methylphenol (m,p-Cresol)	ND		"	0.328	"	"	"	"	"
3-Methylcholanthrene	ND		"	0.328	"	"	"	"	"
3-Nitroaniline	ND		"	0.328	"	"	"	"	"
4,6-Dinitro-2-methylphenol	ND		"	0.328	"	"	"	"	"
4-Aminobiphenyl	ND		"	0.656	"	"	"	"	"
4-Bromophenyl phenyl ether	ND		"	0.328	"	"	"	"	"
4-Chloro-3-methylphenol	ND		"	0.328	"	"	"	"	"
4-Chloroaniline	ND		"	0.328	"	"	"	"	"
4-Chlorophenyl phenyl ether	ND		"	0.328	"	"	"	"	"
4-Nitroaniline	ND		"	0.328	"	"	"	"	"
4-Nitrophenol	ND		"	0.328	"	"	"	"	"
7,12-Dimethylbenz (a) anthracene	ND		"	0.328	"	"	"	"	"
a,a-Dimethylphenethylamine	ND		"	0.328	"	"	"	"	"
Acenaphthene	ND		"	0.328	"	"	"	"	"
Acenaphthylene	ND		"	0.328	"	"	"	"	"
Acetophenone	ND		"	0.328	"	"	"	"	"
Aniline	ND		"	0.328	"	"	"	"	"

Myounghee Noh & Associates	Work Order: HRI0096	Received:	09/18/08
99-1046 Iwaena Street - Suite 210A		Reported:	10/03/08 09:04
Aiea, HI 96701	Project: Ewa Makai Middle Phase II		
Adam Custer	Project Number: Ewa Makai Middle Phase II, 20691		

ANALYTICAL REPORT

Analyte	Sample Result	Data Qualifiers	Units	Rpt Limit	Dilution	Date Analyzed	Prep Date	Seq/ Batch	Method
Sample ID: HRI0096-01 (691 DU1-S0 - Solid/Soil) - cont.					**Sampled: 09/17/08 11:50**		**Recvd: 09/18/08 13:50**		
Semivolatile Organics by GC/MS - cont.									
Anthracene	ND		"	0.328	"	"	"	"	"
Azobenzene	ND		"	0.328	"	"	"	"	"
Benzidine	ND		"	1.69	"	"	"	"	"
Benzo (a) anthracene	ND		"	0.328	"	"	"	"	"
Benzo (a) pyrene	ND		"	0.328	"	"	"	"	"
Benzo (b) fluoranthene	ND		"	0.328	"	"	"	"	"
Benzo (g,h,i) perylene	ND		"	0.328	"	"	"	"	"
Benzo (k) fluoranthene	ND		"	0.328	"	"	"	"	"
Benzoic acid	ND		"	0.328	"	"	"	"	"
Benzyl alcohol	ND		"	0.328	"	"	"	"	"
Bis(2-chloroethoxy)methane	ND		"	0.328	"	"	"	"	"
Bis(2-chloroethyl)ether	ND		"	0.328	"	"	"	"	"
Bis(2-chloroisopropyl) ether	ND		"	0.328	"	"	"	"	"
Bis(2-ethylhexyl)phthalate	ND		"	0.328	"	"	"	"	"
Butyl benzyl phthalate	ND		"	0.328	"	"	"	"	"
Chrysene	ND		"	0.328	"	"	"	"	"
Dibenz (a,j) acridine	ND		"	0.328	"	"	"	"	"
Dibenzo (a,h) anthracene	ND		"	0.328	"	"	"	"	"
Dibenzofuran	ND		"	0.328	"	"	"	"	"
Diethyl phthalate	ND		"	0.328	"	"	"	"	"
Dimethyl phthalate	ND		"	0.328	"	"	"	"	"
Dimethylaminoazobenzene	ND		"	0.328	"	"	"	"	"
Di-n-butyl phthalate	ND		"	0.328	"	"	"	"	"
Di-n-octyl phthalate	ND		"	0.328	"	"	"	"	"
Ethyl Methanesulfonate	ND		"	0.328	"	"	"	"	"
Fluoranthene	ND		"	0.328	"	"	"	"	"
Fluorene	ND		"	0.328	"	"	"	"	"
Hexachlorobenzene	ND		"	0.328	"	"	"	"	"
Hexachlorobutadiene	ND		"	0.328	"	"	"	"	"
Hexachlorocyclopentadiene	ND		"	0.328	"	"	"	"	"
Hexachloroethane	ND		"	0.328	"	"	"	"	"
Indeno (1,2,3-cd) pyrene	ND		"	0.328	"	"	"	"	"
Isophorone	ND		"	0.328	"	"	"	"	"
Methyl Methanesulfonate	ND		"	0.328	"	"	"	"	"
Naphthalene	ND		"	0.328	"	"	"	"	"
Nitrobenzene	ND		"	0.328	"	"	"	"	"
N-Nitrosodimethylamine	ND		"	0.328	"	"	"	"	"
N-Nitrosodi-n-butylamine	ND		"	0.328	"	"	"	"	"
N-Nitrosodi-n-propylamine	ND		"	0.328	"	"	"	"	"
N-Nitrosodiphenylamine	ND		"	0.328	"	"	"	"	"
N-Nitrosopiperidine	ND		"	0.328	"	"	"	"	"
Pentachloronitrobenzene	ND		"	0.328	"	"	"	"	"
Pentachlorophenol	ND		"	0.328	"	"	"	"	"
Phenacetin	ND		"	0.328	"	"	"	"	"
Phenanthrene	ND		"	0.328	"	"	"	"	"
Phenol	ND		"	0.328	"	"	"	"	"

Myounghee Noh & Associates	Work Order: HRI0096	Received:	09/18/08
99-1046 Iwaena Street - Suite 210A		Reported:	10/03/08 09:04
Aiea, HI 96701	Project: Ewa Makai Middle Phase II		
Adam Custer	Project Number: Ewa Makai Middle Phase II, 20691		

ANALYTICAL REPORT

Analyte	Sample Result	Data Qualifiers	Units	Rpt Limit	Dilution	Date Analyzed	Prep Date	Seq/ Batch	Method
Sample ID: HRI0096-01 (691 DU1-S0 - Solid/Soil) - cont.					**Sampled:**	**09/17/08 11:50**		**Recvd: 09/18/08 13:50**	
Semivolatile Organics by GC/MS - cont.									
Pronamide	ND		"	0.328	"	"	"	"	"
Pyrene	ND		"	0.328	"	"	"	"	"
Pyridine	ND		"	0.328	"	"	"	"	"
Surr: 2,4,6-Tribromophenol (40-120%)	*84 %*					"	"	"	"
Surr: 2-Fluorobiphenyl (45-120%)	*82 %*					"	"	"	"
Surr: 2-Fluorophenol (30-120%)	*72 %*					"	"	"	"
Surr: Nitrobenzene-d5 (35-120%)	*78 %*					"	"	"	"
Surr: Phenol-d6 (40-120%)	*68 %*					"	"	"	"
Surr: Terphenyl-d14 (40-130%)	*97 %*					"	"	"	"
Total Metals by SW 846 Series Methods									
Arsenic	**18.8**		mg/kg	9.90	10	09/30/08 15:13	09/30/08	8130006	SW6010B
Barium	**94.6**		"	19.8	"	"	"	"	"
Cadmium	ND	RL3	"	9.90	"	"	"	"	"
Chromium	**81.0**		"	9.90	"	"	"	"	"
Lead	ND	RL3	"	19.8	"	"	"	"	"
Mercury	**0.0825**		"	0.00490	1	09/29/08 17:41	09/29/08	8129008	SW7471
Selenium	ND	RL3	"	19.8	10	09/30/08 15:13	09/30/08	8130006	SW6010B
Silver	ND	RL3	"	9.90	"	"	"	"	"

Myounghee Noh & Associates	Work Order: HRI0096	Received:	09/18/08
99-1046 Iwaena Street - Suite 210A		Reported:	10/03/08 09:04
Aiea, HI 96701	Project: Ewa Makai Middle Phase II		
Adam Custer	Project Number: Ewa Makai Middle Phase II, 20691		

ANALYTICAL REPORT

Analyte	Sample Result	Data Qualifiers	Units	Rpt Limit	Dilution	Date Analyzed	Prep Date	Seq/ Batch	Method
Sample ID: HRI0096-02 (691 DU1-S0-V - Solid/Soil)					**Sampled:**	**09/16/08 13:45**		**Recvd: 09/18/08 13:50**	
Volatile Organic Compounds by EPA 8260B									
1,1,1,2-Tetrachloroethane	ND		mg/kg	0.484	50	09/24/08 14:10	09/24/08	8I25011	SW8260B
1,1,1-Trichloroethane	ND		"	0.484	"	"	"	"	"
1,1,2,2-Tetrachloroethane	ND		"	0.484	"	"	"	"	"
1,1,2-Trichloroethane	ND		"	0.484	"	"	"	"	"
1,1-Dichloroethane	ND		"	2.42	"	"	"	"	"
1,1-Dichloroethene	ND		"	0.484	"	"	"	"	"
1,1-Dichloropropene	ND		"	0.484	"	"	"	"	"
1,2,3-Trichlorobenzene	ND		"	0.484	"	"	"	"	"
1,2,3-Trichloropropane	ND		"	0.484	"	"	"	"	"
1,2,4-Trichlorobenzene	ND		"	2.42	"	"	"	"	"
1,2,4-Trimethylbenzene	ND		"	0.484	"	"	"	"	"
1,2-Dibromo-3-chloropropane	ND		"	0.484	"	"	"	"	"
1,2-Dibromoethane (EDB)	ND		"	0.484	"	"	"	"	"
1,2-Dichlorobenzene	ND		"	2.42	"	"	"	"	"
1,2-Dichloroethane	ND		"	0.484	"	"	"	"	"
1,2-Dichloropropane	ND		"	0.484	"	"	"	"	"
1,3,5-Trimethylbenzene	ND		"	0.484	"	"	"	"	"
1,3-Dichlorobenzene	ND		"	2.42	"	"	"	"	"
1,3-Dichloropropane	ND		"	0.484	"	"	"	"	"
1,4-Dichlorobenzene	ND		"	2.42	"	"	"	"	"
2,2-Dichloropropane	ND		"	0.484	"	"	"	"	"
2-Butanone (MEK)	ND		"	2.42	"	"	"	"	"
2-Chlorotoluene	ND		"	0.484	"	"	"	"	"
2-Hexanone	ND		"	2.42	"	"	"	"	"
4-Chlorotoluene	ND		"	0.484	"	"	"	"	"
4-Methyl-2-pentanone (MIBK)	ND		"	2.42	"	"	"	"	"
Acetone	ND		"	2.42	"	"	"	"	"
Acrylonitrile	ND		"	2.42	"	"	"	"	"
Benzene	ND		"	0.484	"	"	"	"	"
Bromobenzene	ND		"	0.484	"	"	"	"	"
Bromochloromethane	ND		"	2.42	"	"	"	"	"
Bromodichloromethane	ND		"	0.484	"	"	"	"	"
Bromoform	ND		"	0.484	"	"	"	"	"
Bromomethane	ND		"	4.84	"	"	"	"	"
Carbon disulfide	ND		"	0.484	"	"	"	"	"
Carbon Tetrachloride	ND		"	0.484	"	"	"	"	"
Chlorobenzene	ND		"	0.484	"	"	"	"	"
Chlorodibromomethane	ND		"	0.484	"	"	"	"	"
Chloroethane	ND		"	2.42	"	"	"	"	"
Chloroform	ND		"	0.484	"	"	"	"	"
Chloromethane	ND		"	2.42	"	"	"	"	"
cis-1,2-Dichloroethene	ND		"	0.484	"	"	"	"	"
cis-1,3-Dichloropropene	ND		"	0.484	"	"	"	"	"
Dibromomethane	ND		"	0.484	"	"	"	"	"
Dichlorodifluoromethane	ND		"	2.42	"	"	"	"	"
Ethylbenzene	ND		"	0.484	"	"	"	"	"

Myounghee Noh & Associates	Work Order: HRI0096	Received:	09/18/08
99-1046 Iwaena Street - Suite 210A		Reported:	10/03/08 09:04
Aiea, HI 96701	Project: Ewa Makai Middle Phase II		
Adam Custer	Project Number: Ewa Makai Middle Phase II, 20691		

ANALYTICAL REPORT

Analyte	Sample Result	Data Qualifiers	Units	Rpt Limit	Dilution	Date Analyzed	Prep Date	Seq/ Batch	Method
Sample ID: HRI0096-02 (691 DU1-S0-V - Solid/Soil) - cont.					**Sampled: 09/16/08 13:45**		**Recvd: 09/18/08 13:50**		
Volatile Organic Compounds by EPA 8260B - cont.									
Hexachlorobutadiene	ND		"	2.42	"	"	"	"	"
Iodomethane	ND		"	2.42	"	"	"	"	"
Isopropylbenzene	ND		"	0.484	"	"	"	"	"
m,p-Xylene	ND		"	0.484	"	"	"	"	"
Methyl tert-Butyl Ether	ND		"	0.242	"	"	"	"	"
Methylene Chloride	ND		"	2.42	"	"	"	"	"
Naphthalene	ND		"	2.42	"	"	"	"	"
n-Butylbenzene	ND		"	0.484	"	"	"	"	"
n-Propylbenzene	ND		"	0.484	"	"	"	"	"
o-Xylene	ND		"	0.484	"	"	"	"	"
p-Isopropyltoluene	ND		"	0.484	"	"	"	"	"
sec-Butylbenzene	ND		"	0.484	"	"	"	"	"
Styrene	ND		"	0.484	"	"	"	"	"
tert-Butylbenzene	ND		"	0.484	"	"	"	"	"
Tetrachloroethene	ND		"	0.484	"	"	"	"	"
Toluene	ND		"	0.484	"	"	"	"	"
trans-1,2-Dichloroethene	ND		"	0.484	"	"	"	"	"
trans-1,3-Dichloropropene	ND		"	0.484	"	"	"	"	"
trans-1,4-Dichloro-2-butene	ND		"	2.42	"	"	"	"	"
Trichloroethene	ND		"	0.484	"	"	"	"	"
Trichlorofluoromethane	ND		"	0.484	"	"	"	"	"
Vinyl Acetate	ND		"	2.42	"	"	"	"	"
Vinyl chloride	ND		"	2.42	"	"	"	"	"
Surr: 1,2-Dichloroethane-d4 (80-120%)	*94 %*					"	"	"	"
Surr: 4-Bromofluorobenzene (80-120%)	*93 %*					"	"	"	"
Surr: Dibromofluoromethane (80-120%)	*101 %*					"	"	"	"
Surr: Toluene-d8 (80-120%)	*92 %*					"	"	"	"

Myounghee Noh & Associates	Work Order: HRI0096	Received:	09/18/08
99-1046 Iwaena Street - Suite 210A		Reported:	10/03/08 09:04
Aiea, HI 96701	Project: Ewa Makai Middle Phase II		
Adam Custer	Project Number: Ewa Makai Middle Phase II, 20691		

ANALYTICAL REPORT

Analyte	Sample Result	Data Qualifiers	Units	Rpt Limit	Dilution	Date Analyzed	Prep Date	Seq/ Batch	Method
Sample ID: HRI0096-03 (691 DU1-S2.5-1 - Solid/Soil)					**Sampled: 09/17/08 17:30**		**Recvd: 09/18/08 13:50**		
Extractable Petroleum Hydrocarbons by 8015M									
DRO	ND		mg/kg	3.91	1	10/01/08 20:07	09/23/08	8123010	SW8015M
Surr: o-Terphenyl (35-120%)	*108 %*					"	"	"	"
Semivolatile Organics by GC/MS									
1,2,4,5-Tetrachlorobenzene	ND		mg/kg	0.325	1	09/26/08 14:50	09/25/08	8125006	SW8270C
1,2,4-Trichlorobenzene	ND		"	0.325	"	"	"	"	"
1,2-Dichlorobenzene	ND		"	0.325	"	"	"	"	"
1,3-Dichlorobenzene	ND		"	0.325	"	"	"	"	"
1,4-Dichlorobenzene	ND		"	0.325	"	"	"	"	"
1-Chloronaphthalene	ND		"	0.325	"	"	"	"	"
1-Methylnaphthalene	ND		"	0.325	"	"	"	"	"
1-Naphthylamine	ND		"	0.649	"	"	"	"	"
2,3,4,6-Tetrachlorophenol	ND		"	0.325	"	"	"	"	"
2,4,5-Trichlorophenol	ND		"	0.325	"	"	"	"	"
2,4,6-Trichlorophenol	ND		"	0.325	"	"	"	"	"
2,4-Dichlorophenol	ND		"	0.325	"	"	"	"	"
2,4-Dimethylphenol	ND		"	0.325	"	"	"	"	"
2,4-Dinitrophenol	ND		"	1.67	"	"	"	"	"
2,4-Dinitrotoluene	ND		"	0.325	"	"	"	"	"
2,6-Dichlorophenol	ND		"	0.325	"	"	"	"	"
2,6-Dinitrotoluene	ND		"	0.325	"	"	"	"	"
2-Chloronaphthalene	ND		"	0.325	"	"	"	"	"
2-Chlorophenol	ND		"	0.325	"	"	"	"	"
2-Methylnaphthalene	ND		"	0.325	"	"	"	"	"
2-Methylphenol (o-Cresol)	ND		"	0.325	"	"	"	"	"
2-Naphthylamine	ND		"	0.649	"	"	"	"	"
2-Nitroaniline	ND		"	0.325	"	"	"	"	"
2-Nitrophenol	ND		"	0.325	"	"	"	"	"
2-Picoline	ND		"	0.325	"	"	"	"	"
3,3'-Dichlorobenzidine	ND		"	0.325	"	"	"	"	"
3,4-Methylphenol (m,p-Cresol)	ND		"	0.325	"	"	"	"	"
3-Methylcholanthrene	ND		"	0.325	"	"	"	"	"
3-Nitroaniline	ND		"	0.325	"	"	"	"	"
4,6-Dinitro-2-methylphenol	ND		"	0.325	"	"	"	"	"
4-Aminobiphenyl	ND		"	0.649	"	"	"	"	"
4-Bromophenyl phenyl ether	ND		"	0.325	"	"	"	"	"
4-Chloro-3-methylphenol	ND		"	0.325	"	"	"	"	"
4-Chloroaniline	ND		"	0.325	"	"	"	"	"
4-Chlorophenyl phenyl ether	ND		"	0.325	"	"	"	"	"
4-Nitroaniline	ND		"	0.325	"	"	"	"	"
4-Nitrophenol	ND		"	0.325	"	"	"	"	"
7,12-Dimethylbenz (a) anthracene	ND		"	0.325	"	"	"	"	"
a,a-Dimethylphenethylamine	ND		"	0.325	"	"	"	"	"
Acenaphthene	ND		"	0.325	"	"	"	"	"
Acenaphthylene	ND		"	0.325	"	"	"	"	"
Acetophenone	ND		"	0.325	"	"	"	"	"
Aniline	ND		"	0.325	"	"	"	"	"

Myounghee Noh & Associates	Work Order: HRI0096	Received:	09/18/08
99-1046 Iwaena Street - Suite 210A		Reported:	10/03/08 09:04
Aiea, HI 96701	Project: Ewa Makai Middle Phase II		
Adam Custer	Project Number: Ewa Makai Middle Phase II, 20691		

ANALYTICAL REPORT

Analyte	Sample Result	Data Qualifiers	Units	Rpt Limit	Dilution	Date Analyzed	Prep Date	Seq/ Batch	Method
Sample ID: HRI0096-03 (691 DU1-S2.5-1 - Solid/Soil) - cont.					**Sampled: 09/17/08 17:30**		**Recvd: 09/18/08 13:50**		
Semivolatile Organics by GC/MS - cont.									
Anthracene	ND		"	0.325	"	"	"	"	-
Azobenzene	ND		"	0.325	"	"	"	"	-
Benzidine	ND		"	1.67	"	"	"	"	-
Benzo (a) anthracene	ND		"	0.325	"	"	"	"	-
Benzo (a) pyrene	ND		"	0.325	"	"	"	"	-
Benzo (b) fluoranthene	ND		"	0.325	"	"	"	"	-
Benzo (g,h,i) perylene	ND		"	0.325	"	"	"	"	-
Benzo (k) fluoranthene	ND		"	0.325	"	"	"	"	-
Benzoic acid	ND		"	0.325	"	"	"	"	-
Benzyl alcohol	ND		"	0.325	"	"	"	"	-
Bis(2-chloroethoxy)methane	ND		"	0.325	"	"	"	"	-
Bis(2-chloroethyl)ether	ND		"	0.325	"	"	"	"	-
Bis(2-chloroisopropyl) ether	ND		"	0.325	"	"	"	"	-
Bis(2-ethylhexyl)phthalate	ND		"	0.325	"	"	"	"	-
Butyl benzyl phthalate	ND		"	0.325	"	"	"	"	-
Chrysene	ND		"	0.325	"	"	"	"	-
Dibenz (a,j) acridine	ND		"	0.325	"	"	"	"	-
Dibenzo (a,h) anthracene	ND		"	0.325	"	"	"	"	-
Dibenzofuran	ND		"	0.325	"	"	"	"	-
Diethyl phthalate	ND		"	0.325	"	"	"	"	-
Dimethyl phthalate	ND		"	0.325	"	"	"	"	-
Dimethylaminoazobenzene	ND		"	0.325	"	"	"	"	-
Di-n-butyl phthalate	ND		"	0.325	"	"	"	"	-
Di-n-octyl phthalate	ND		"	0.325	"	"	"	"	-
Ethyl Methanesulfonate	ND		"	0.325	"	"	"	"	-
Fluoranthene	ND		"	0.325	"	"	"	"	-
Fluorene	ND		"	0.325	"	"	"	"	-
Hexachlorobenzene	ND		"	0.325	"	"	"	"	-
Hexachlorobutadiene	ND		"	0.325	"	"	"	"	-
Hexachlorocyclopentadiene	ND		"	0.325	"	"	"	"	-
Hexachloroethane	ND		"	0.325	"	"	"	"	-
Indeno (1,2,3-cd) pyrene	ND		"	0.325	"	"	"	"	-
Isophorone	ND		"	0.325	"	"	"	"	-
Methyl Methanesulfonate	ND		"	0.325	"	"	"	"	-
Naphthalene	ND		"	0.325	"	"	"	"	-
Nitrobenzene	ND		"	0.325	"	"	"	"	-
N-Nitrosodimethylamine	ND		"	0.325	"	"	"	"	-
N-Nitrosodi-n-butylamine	ND		"	0.325	"	"	"	"	-
N-Nitrosodi-n-propylamine	ND		"	0.325	"	"	"	"	-
N-Nitrosodiphenylamine	ND		"	0.325	"	"	"	"	-
N-Nitrosopiperidine	ND		"	0.325	"	"	"	"	-
Pentachloronitrobenzene	ND		"	0.325	"	"	"	"	-
Pentachlorophenol	ND		"	0.325	"	"	"	"	-
Phenacetin	ND		"	0.325	"	"	"	"	-
Phenanthrene	ND		"	0.325	"	"	"	"	-
Phenol	ND		"	0.325	"	"	"	"	-

Myounghee Noh & Associates	Work Order: HRI0096	Received:	09/18/08
99-1046 Iwaena Street - Suite 210A		Reported:	10/03/08 09:04
Aiea, HI 96701	Project: Ewa Makai Middle Phase II		
Adam Custer	Project Number: Ewa Makai Middle Phase II, 20691		

ANALYTICAL REPORT

Analyte	Sample Result	Data Qualifiers	Units	Rpt Limit	Dilution	Date Analyzed	Prep Date	Seq/ Batch	Method
Sample ID: HRI0096-03 (691 DU1-S2.5-1 - Solid/Soil) - cont.					**Sampled: 09/17/08 17:30**		**Recvd: 09/18/08 13:50**		
Semivolatile Organics by GC/MS - cont.									
Pronamide	ND		"	0.325	"	"	"	"	-
Pyrene	ND		"	0.325	"	"	"	"	-
Pyridine	ND		"	0.325	"	"	"	"	-
Surr: 2,4,6-Tribromophenol (40-120%)	*74 %*					"	"	"	"
Surr: 2-Fluorobiphenyl (45-120%)	*76 %*					"	"	"	"
Surr: 2-Fluorophenol (30-120%)	*66 %*					"	"	"	"
Surr: Nitrobenzene-d5 (35-120%)	*73 %*					"	"	"	"
Surr: Phenol-d6 (40-120%)	*66 %*					"	"	"	"
Surr: Terphenyl-d14 (40-130%)	*85 %*					"	"	"	"
Total Metals by SW 846 Series Methods									
Arsenic	**10.9**		mg/kg	9.26	10	09/30/08 15:27	09/30/08	8130006	SW6010B
Barium	**58.7**		"	18.5	"	"	"	"	-
Cadmium	ND	RL3	"	9.26	"	"	"	"	-
Chromium	**38.1**		"	9.26	"	"	"	"	-
Lead	ND	RL3	"	18.5	"	"	"	"	-
Mercury	**0.0504**		"	0.00481	1	09/29/08 17:42	09/29/08	8129008	SW7471
Selenium	ND	RL3	"	18.5	10	09/30/08 15:27	09/30/08	8130006	SW6010B
Silver	ND	RL3	"	9.26	"	"	"	"	-
Volatile Organic Compounds by EPA 8260B									
1,1,1,2-Tetrachloroethane	ND		mg/kg	0.796	50	09/24/08 14:37	09/24/08	8125011	SW8260B
1,1,1-Trichloroethane	ND		"	0.796	"	"	"	"	-
1,1,2,2-Tetrachloroethane	ND		"	0.796	"	"	"	"	-
1,1,2-Trichloroethane	ND		"	0.796	"	"	"	"	-
1,1-Dichloroethane	ND		"	3.98	"	"	"	"	-
1,1-Dichloroethene	ND		"	0.796	"	"	"	"	-
1,1-Dichloropropene	ND		"	0.796	"	"	"	"	-
1,2,3-Trichlorobenzene	ND		"	0.796	"	"	"	"	-
1,2,3-Trichloropropane	ND		"	0.796	"	"	"	"	-
1,2,4-Trichlorobenzene	ND		"	3.98	"	"	"	"	-
1,2,4-Trimethylbenzene	ND		"	0.796	"	"	"	"	-
1,2-Dibromo-3-chloropropane	ND		"	0.796	"	"	"	"	-
1,2-Dibromoethane (EDB)	ND		"	0.796	"	"	"	"	-
1,2-Dichlorobenzene	ND		"	3.98	"	"	"	"	-
1,2-Dichloroethane	ND		"	0.796	"	"	"	"	-
1,2-Dichloropropane	ND		"	0.796	"	"	"	"	-
1,3,5-Trimethylbenzene	ND		"	0.796	"	"	"	"	-
1,3-Dichlorobenzene	ND		"	3.98	"	"	"	"	-
1,3-Dichloropropane	ND		"	0.796	"	"	"	"	-
1,4-Dichlorobenzene	ND		"	3.98	"	"	"	"	-
2,2-Dichloropropane	ND		"	0.796	"	"	"	"	-
2-Butanone (MEK)	ND		"	3.98	"	"	"	"	-
2-Chlorotoluene	ND		"	0.796	"	"	"	"	-
2-Hexanone	ND		"	3.98	"	"	"	"	-
4-Chlorotoluene	ND		"	0.796	"	"	"	"	-
4-Methyl-2-pentanone (MIBK)	ND		"	3.98	"	"	"	"	-

Myounghee Noh & Associates	Work Order: HRI0096	Received:	09/18/08
99-1046 Iwaena Street - Suite 210A		Reported:	10/03/08 09:04
Aiea, HI 96701	Project: Ewa Makai Middle Phase II		
Adam Custer	Project Number: Ewa Makai Middle Phase II, 20691		

ANALYTICAL REPORT

Analyte	Sample Result	Data Qualifiers	Units	Rpt Limit	Dilution	Date Analyzed	Prep Date	Seq/ Batch	Method
Sample ID: HRI0096-03 (691 DU1-S2.5-1 - Solid/Soil) - cont.					**Sampled: 09/17/08 17:30**		**Recvd: 09/18/08 13:50**		
Volatile Organic Compounds by EPA 8260B - cont.									
Acetone	ND		"	3.98	"	"	"	"	"
Acrylonitrile	ND		"	3.98	"	"	"	"	"
Benzene	ND		"	0.796	"	"	"	"	"
Bromobenzene	ND		"	0.796	"	"	"	"	"
Bromochloromethane	ND		"	3.98	"	"	"	"	"
Bromodichloromethane	ND		"	0.796	"	"	"	"	"
Bromoform	ND		"	0.796	"	"	"	"	"
Bromomethane	ND		"	7.96	"	"	"	"	"
Carbon disulfide	ND		"	0.796	"	"	"	"	"
Carbon Tetrachloride	ND		"	0.796	"	"	"	"	"
Chlorobenzene	ND		"	0.796	"	"	"	"	"
Chlorodibromomethane	ND		"	0.796	"	"	"	"	"
Chloroethane	ND		"	3.98	"	"	"	"	"
Chloroform	ND		"	0.796	"	"	"	"	"
Chloromethane	ND		"	3.98	"	"	"	"	"
cis-1,2-Dichloroethene	ND		"	0.796	"	"	"	"	"
cis-1,3-Dichloropropene	ND		"	0.796	"	"	"	"	"
Dibromomethane	ND		"	0.796	"	"	"	"	"
Dichlorodifluoromethane	ND		"	3.98	"	"	"	"	"
Ethylbenzene	ND		"	0.796	"	"	"	"	"
Hexachlorobutadiene	ND		"	3.98	"	"	"	"	"
Iodomethane	ND		"	3.98	"	"	"	"	"
Isopropylbenzene	ND		"	0.796	"	"	"	"	"
m,p-Xylene	ND		"	0.796	"	"	"	"	"
Methyl tert-Butyl Ether	ND		"	0.398	"	"	"	"	"
Methylene Chloride	ND		"	3.98	"	"	"	"	"
Naphthalene	ND		"	3.98	"	"	"	"	"
n-Butylbenzene	ND		"	0.796	"	"	"	"	"
n-Propylbenzene	ND		"	0.796	"	"	"	"	"
o-Xylene	ND		"	0.796	"	"	"	"	"
p-Isopropyltoluene	ND		"	0.796	"	"	"	"	"
sec-Butylbenzene	ND		"	0.796	"	"	"	"	"
Styrene	ND		"	0.796	"	"	"	"	"
tert-Butylbenzene	ND		"	0.796	"	"	"	"	"
Tetrachloroethene	ND		"	0.796	"	"	"	"	"
Toluene	ND		"	0.796	"	"	"	"	"
trans-1,2-Dichloroethene	ND		"	0.796	"	"	"	"	"
trans-1,3-Dichloropropene	ND		"	0.796	"	"	"	"	"
trans-1,4-Dichloro-2-butene	ND		"	3.98	"	"	"	"	"
Trichloroethene	ND		"	0.796	"	"	"	"	"
Trichlorofluoromethane	ND		"	0.796	"	"	"	"	"
Vinyl Acetate	ND		"	3.98	"	"	"	"	"
Vinyl chloride	ND		"	3.98	"	"	"	"	"
Surr: 1,2-Dichloroethane-d4 (80-120%)	*92 %*					"	"	"	"
Surr: 4-Bromofluorobenzene (80-120%)	*97 %*					"	"	"	"
Surr: Dibromofluoromethane (80-120%)	*99 %*					"	"	"	"

TestAmerica
THE LEADER IN ENVIRONMENTAL TESTING
99-193 Aiea Heights Drive, Suite 121 Aiea, HI 96701 * 808-486-5227 * Fax 808-486-2456

Myounghee Noh & Associates	Work Order: HRI0096	Received:	09/18/08
99-1046 Iwaena Street - Suite 210A		Reported:	10/03/08 09:04
Aiea, HI 96701	Project: Ewa Makai Middle Phase II		
Adam Custer	Project Number: Ewa Makai Middle Phase II, 20691		

ANALYTICAL REPORT

Analyte	Sample Result	Data Qualifiers	Units	Rpt Limit	Dilution	Date Analyzed	Prep Date	Seq/ Batch	Method
Sample ID: HRI0096-03 (691 DU1-S2.5-1 - Solid/Soil) - cont.					**Sampled: 09/17/08 17:30**		**Recvd: 09/18/08 13:50**		
Volatile Organic Compounds by EPA 8260B - cont.									
Surr: Toluene-d8 (80-120%)	*97 %*					"	"	"	"

Myounghee Noh & Associates	Work Order: HRI0096	Received:	09/18/08
99-1046 Iwaena Street - Suite 210A		Reported:	10/03/08 09:04
Aiea, HI 96701	Project: Ewa Makai Middle Phase II		
Adam Custer	Project Number: Ewa Makai Middle Phase II, 20691		

ANALYTICAL REPORT

Analyte	Sample Result	Data Qualifiers	Units	Rpt Limit	Dilution	Date Analyzed	Prep Date	Seq/ Batch	Method
Sample ID: HRI0096-04 (691 DU1-S2.5-2 - Solid/Soil)					**Sampled: 09/17/08 17:30**		**Recvd: 09/18/08 13:50**		
Extractable Petroleum Hydrocarbons by 8015M									
DRO	6.39		mg/kg	3.96	1	09/30/08 08:25	09/23/08	8123010	SW8015M
Surr: o-Terphenyl (35-120%)	*116 %*					"	"	"	"
Semivolatile Organics by GC/MS									
1,2,4,5-Tetrachlorobenzene	ND		mg/kg	0.327	1	09/26/08 15:30	09/25/08	8125006	SW8270C
1,2,4-Trichlorobenzene	ND		"	0.327	"	"	"	"	"
1,2-Dichlorobenzene	ND		"	0.327	"	"	"	"	"
1,3-Dichlorobenzene	ND		"	0.327	"	"	"	"	"
1,4-Dichlorobenzene	ND		"	0.327	"	"	"	"	"
1-Chloronaphthalene	ND		"	0.327	"	"	"	"	"
1-Methylnaphthalene	ND		"	0.327	"	"	"	"	"
1-Naphthylamine	ND		"	0.653	"	"	"	"	"
2,3,4,6-Tetrachlorophenol	ND		"	0.327	"	"	"	"	"
2,4,5-Trichlorophenol	ND		"	0.327	"	"	"	"	"
2,4,6-Trichlorophenol	ND		"	0.327	"	"	"	"	"
2,4-Dichlorophenol	ND		"	0.327	"	"	"	"	"
2,4-Dimethylphenol	ND		"	0.327	"	"	"	"	"
2,4-Dinitrophenol	ND		"	1.68	"	"	"	"	"
2,4-Dinitrotoluene	ND		"	0.327	"	"	"	"	"
2,6-Dichlorophenol	ND		"	0.327	"	"	"	"	"
2,6-Dinitrotoluene	ND		"	0.327	"	"	"	"	"
2-Chloronaphthalene	ND		"	0.327	"	"	"	"	"
2-Chlorophenol	ND		"	0.327	"	"	"	"	"
2-Methylnaphthalene	ND		"	0.327	"	"	"	"	"
2-Methylphenol (o-Cresol)	ND		"	0.327	"	"	"	"	"
2-Naphthylamine	ND		"	0.653	"	"	"	"	"
2-Nitroaniline	ND		"	0.327	"	"	"	"	"
2-Nitrophenol	ND		"	0.327	"	"	"	"	"
2-Picoline	ND		"	0.327	"	"	"	"	"
3,3'-Dichlorobenzidine	ND		"	0.327	"	"	"	"	"
3,4-Methylphenol (m,p-Cresol)	ND		"	0.327	"	"	"	"	"
3-Methylcholanthrene	ND		"	0.327	"	"	"	"	"
3-Nitroaniline	ND		"	0.327	"	"	"	"	"
4,6-Dinitro-2-methylphenol	ND		"	0.327	"	"	"	"	"
4-Aminobiphenyl	ND		"	0.653	"	"	"	"	"
4-Bromophenyl phenyl ether	ND		"	0.327	"	"	"	"	"
4-Chloro-3-methylphenol	ND		"	0.327	"	"	"	"	"
4-Chloroaniline	ND		"	0.327	"	"	"	"	"
4-Chlorophenyl phenyl ether	ND		"	0.327	"	"	"	"	"
4-Nitroaniline	ND		"	0.327	"	"	"	"	"
4-Nitrophenol	ND		"	0.327	"	"	"	"	"
7,12-Dimethylbenz (a) anthracene	ND		"	0.327	"	"	"	"	"
a,a-Dimethylphenethylamine	ND		"	0.327	"	"	"	"	"
Acenaphthene	ND		"	0.327	"	"	"	"	"
Acenaphthylene	ND		"	0.327	"	"	"	"	"
Acetophenone	ND		"	0.327	"	"	"	"	"
Aniline	ND		"	0.327	"	"	"	"	"

TestAmerica
THE LEADER IN ENVIRONMENTAL TESTING
99-193 Aiea Heights Drive, Suite 121 Aiea, HI 96701 * 808-486-5227 * Fax 808-486-2456

Myounghee Noh & Associates	Work Order: HRI0096	Received:	09/18/08
99-1046 Iwaena Street - Suite 210A		Reported:	10/03/08 09:04
Aiea, HI 96701	Project: Ewa Makai Middle Phase II		
Adam Custer	Project Number: Ewa Makai Middle Phase II, 20691		

ANALYTICAL REPORT

Analyte	Sample Result	Data Qualifiers	Units	Rpt Limit	Dilution	Date Analyzed	Prep Date	Seq/ Batch	Method
Sample ID: HRI0096-04 (691 DU1-S2.5-2 - Solid/Soil) - cont.					**Sampled: 09/17/08 17:30**		**Recvd: 09/18/08 13:50**		
Semivolatile Organics by GC/MS - cont.									
Anthracene	ND		"	0.327	"	"	"	"	"
Azobenzene	ND		"	0.327	"	"	"	"	"
Benzidine	ND		"	1.68	"	"	"	"	"
Benzo (a) anthracene	ND		"	0.327	"	"	"	"	"
Benzo (a) pyrene	ND		"	0.327	"	"	"	"	"
Benzo (b) fluoranthene	ND		"	0.327	"	"	"	"	"
Benzo (g,h,i) perylene	ND		"	0.327	"	"	"	"	"
Benzo (k) fluoranthene	ND		"	0.327	"	"	"	"	"
Benzoic acid	ND		"	0.327	"	"	"	"	"
Benzyl alcohol	ND		"	0.327	"	"	"	"	"
Bis(2-chloroethoxy)methane	ND		"	0.327	"	"	"	"	"
Bis(2-chloroethyl)ether	ND		"	0.327	"	"	"	"	"
Bis(2-chloroisopropyl) ether	ND		"	0.327	"	"	"	"	"
Bis(2-ethylhexyl)phthalate	ND		"	0.327	"	"	"	"	"
Butyl benzyl phthalate	ND		"	0.327	"	"	"	"	"
Chrysene	ND		"	0.327	"	"	"	"	"
Dibenz (a,j) acridine	ND		"	0.327	"	"	"	"	"
Dibenzo (a,h) anthracene	ND		"	0.327	"	"	"	"	"
Dibenzofuran	ND		"	0.327	"	"	"	"	"
Diethyl phthalate	ND		"	0.327	"	"	"	"	"
Dimethyl phthalate	ND		"	0.327	"	"	"	"	"
Dimethylaminoazobenzene	ND		"	0.327	"	"	"	"	"
Di-n-butyl phthalate	ND		"	0.327	"	"	"	"	"
Di-n-octyl phthalate	ND		"	0.327	"	"	"	"	"
Ethyl Methanesulfonate	ND		"	0.327	"	"	"	"	"
Fluoranthene	ND		"	0.327	"	"	"	"	"
Fluorene	ND		"	0.327	"	"	"	"	"
Hexachlorobenzene	ND		"	0.327	"	"	"	"	"
Hexachlorobutadiene	ND		"	0.327	"	"	"	"	"
Hexachlorocyclopentadiene	ND		"	0.327	"	"	"	"	"
Hexachloroethane	ND		"	0.327	"	"	"	"	"
Indeno (1,2,3-cd) pyrene	ND		"	0.327	"	"	"	"	"
Isophorone	ND		"	0.327	"	"	"	"	"
Methyl Methanesulfonate	ND		"	0.327	"	"	"	"	"
Naphthalene	ND		"	0.327	"	"	"	"	"
Nitrobenzene	ND		"	0.327	"	"	"	"	"
N-Nitrosodimethylamine	ND		"	0.327	"	"	"	"	"
N-Nitrosodi-n-butylamine	ND		"	0.327	"	"	"	"	"
N-Nitrosodi-n-propylamine	ND		"	0.327	"	"	"	"	"
N-Nitrosodiphenylamine	ND		"	0.327	"	"	"	"	"
N-Nitrosopiperidine	ND		"	0.327	"	"	"	"	"
Pentachloronitrobenzene	ND		"	0.327	"	"	"	"	"
Pentachlorophenol	ND		"	0.327	"	"	"	"	"
Phenacetin	ND		"	0.327	"	"	"	"	"
Phenanthrene	ND		"	0.327	"	"	"	"	"
Phenol	ND		"	0.327	"	"	"	"	"

Myounghee Noh & Associates	Work Order: HRI0096	Received:	09/18/08
99-1046 Iwaena Street - Suite 210A		Reported:	10/03/08 09:04
Aiea, HI 96701	Project: Ewa Makai Middle Phase II		
Adam Custer	Project Number: Ewa Makai Middle Phase II, 20691		

ANALYTICAL REPORT

Analyte	Sample Result	Data Qualifiers	Units	Rpt Limit	Dilution	Date Analyzed	Prep Date	Seq/ Batch	Method
Sample ID: HRI0096-04 (691 DU1-S2.5-2 - Solid/Soil) - cont.					**Sampled:**	**09/17/08 17:30**		**Recvd: 09/18/08 13:50**	
Semivolatile Organics by GC/MS - cont.									
Pronamide	ND		"	0.327	"	"	"	"	"
Pyrene	ND		"	0.327	"	"	"	"	"
Pyridine	ND		"	0.327	"	"	"	"	"
Surr: 2,4,6-Tribromophenol (40-120%)	*75 %*					"	"	"	"
Surr: 2-Fluorobiphenyl (45-120%)	*74 %*					"	"	"	"
Surr: 2-Fluorophenol (30-120%)	*67 %*					"	"	"	"
Surr: Nitrobenzene-d5 (35-120%)	*72 %*					"	"	"	"
Surr: Phenol-d6 (40-120%)	*66 %*					"	"	"	"
Surr: Terphenyl-d14 (40-130%)	*86 %*					"	"	"	"
Total Metals by SW 846 Series Methods									
Arsenic	**10.7**		mg/kg	9.80	10	09/30/08 15:32	09/30/08	8130006	SW6010B
Barium	**61.8**		"	19.6	"	"	"	"	"
Cadmium	ND	RL3	"	9.80	"	"	"	"	"
Chromium	**36.0**		"	9.80	"	"	"	"	"
Lead	**21.2**		"	19.6	"	"	"	"	"
Mercury	**0.0416**		"	0.00481	1	09/29/08 17:43	09/29/08	8129008	SW7471
Selenium	ND	RL3	"	19.6	10	09/30/08 15:32	09/30/08	8130006	SW6010B
Silver	ND	RL3	"	9.80	"	"	"	"	"
Volatile Organic Compounds by EPA 8260B									
1,1,1,2-Tetrachloroethane	ND		mg/kg	0.845	50	09/24/08 15:23	09/24/08	8125011	SW8260B
1,1,1-Trichloroethane	ND		"	0.845	"	"	"	"	"
1,1,2,2-Tetrachloroethane	ND		"	0.845	"	"	"	"	"
1,1,2-Trichloroethane	ND		"	0.845	"	"	"	"	"
1,1-Dichloroethane	ND		"	4.22	"	"	"	"	"
1,1-Dichloroethene	ND		"	0.845	"	"	"	"	"
1,1-Dichloropropene	ND		"	0.845	"	"	"	"	"
1,2,3-Trichlorobenzene	ND		"	0.845	"	"	"	"	"
1,2,3-Trichloropropane	ND		"	0.845	"	"	"	"	"
1,2,4-Trichlorobenzene	ND		"	4.22	"	"	"	"	"
1,2,4-Trimethylbenzene	ND		"	0.845	"	"	"	"	"
1,2-Dibromo-3-chloropropane	ND		"	0.845	"	"	"	"	"
1,2-Dibromoethane (EDB)	ND		"	0.845	"	"	"	"	"
1,2-Dichlorobenzene	ND		"	4.22	"	"	"	"	"
1,2-Dichloroethane	ND		"	0.845	"	"	"	"	"
1,2-Dichloropropane	ND		"	0.845	"	"	"	"	"
1,3,5-Trimethylbenzene	ND		"	0.845	"	"	"	"	"
1,3-Dichlorobenzene	ND		"	4.22	"	"	"	"	"
1,3-Dichloropropane	ND		"	0.845	"	"	"	"	"
1,4-Dichlorobenzene	ND		"	4.22	"	"	"	"	"
2,2-Dichloropropane	ND		"	0.845	"	"	"	"	"
2-Butanone (MEK)	ND		"	4.22	"	"	"	"	"
2-Chlorotoluene	ND		"	0.845	"	"	"	"	"
2-Hexanone	ND		"	4.22	"	"	"	"	"
4-Chlorotoluene	ND		"	0.845	"	"	"	"	"
4-Methyl-2-pentanone (MIBK)	ND		"	4.22	"	"	"	"	"

Myounghee Noh & Associates	Work Order: HRI0096	Received:	09/18/08
99-1046 Iwaena Street - Suite 210A		Reported:	10/03/08 09:04
Aiea, HI 96701	Project: Ewa Makai Middle Phase II		
Adam Custer	Project Number: Ewa Makai Middle Phase II, 20691		

ANALYTICAL REPORT

Analyte	Sample Result	Data Qualifiers	Units	Rpt Limit	Dilution	Date Analyzed	Prep Date	Seq/ Batch	Method
Sample ID: HRI0096-04 (691 DU1-S2.5-2 - Solid/Soil) - cont.					**Sampled:**	**09/17/08 17:30**		**Recvd: 09/18/08 13:50**	
Volatile Organic Compounds by EPA 8260B - cont.									
Acetone	ND		"	4.22	"	"	"	"	"
Acrylonitrile	ND		"	4.22	"	"	"	"	"
Benzene	ND		"	0.845	"	"	"	"	"
Bromobenzene	ND		"	0.845	"	"	"	"	"
Bromochloromethane	ND		"	4.22	"	"	"	"	"
Bromodichloromethane	ND		"	0.845	"	"	"	"	"
Bromoform	ND		"	0.845	"	"	"	"	"
Bromomethane	ND		"	8.45	"	"	"	"	"
Carbon disulfide	ND		"	0.845	"	"	"	"	"
Carbon Tetrachloride	ND		"	0.845	"	"	"	"	"
Chlorobenzene	ND		"	0.845	"	"	"	"	"
Chlorodibromomethane	ND		"	0.845	"	"	"	"	"
Chloroethane	ND		"	4.22	"	"	"	"	"
Chloroform	ND		"	0.845	"	"	"	"	"
Chloromethane	ND		"	4.22	"	"	"	"	"
cis-1,2-Dichloroethene	ND		"	0.845	"	"	"	"	"
cis-1,3-Dichloropropene	ND		"	0.845	"	"	"	"	"
Dibromomethane	ND		"	0.845	"	"	"	"	"
Dichlorodifluoromethane	ND		"	4.22	"	"	"	"	"
Ethylbenzene	ND		"	0.845	"	"	"	"	"
Hexachlorobutadiene	ND		"	4.22	"	"	"	"	"
Iodomethane	ND		"	4.22	"	"	"	"	"
Isopropylbenzene	ND		"	0.845	"	"	"	"	"
m,p-Xylene	ND		"	0.845	"	"	"	"	"
Methyl tert-Butyl Ether	ND		"	0.422	"	"	"	"	"
Methylene Chloride	ND		"	4.22	"	"	"	"	"
Naphthalene	ND		"	4.22	"	"	"	"	"
n-Butylbenzene	ND		"	0.845	"	"	"	"	"
n-Propylbenzene	ND		"	0.845	"	"	"	"	"
o-Xylene	ND		"	0.845	"	"	"	"	"
p-Isopropyltoluene	ND		"	0.845	"	"	"	"	"
sec-Butylbenzene	ND		"	0.845	"	"	"	"	"
Styrene	ND		"	0.845	"	"	"	"	"
tert-Butylbenzene	ND		"	0.845	"	"	"	"	"
Tetrachloroethene	ND		"	0.845	"	"	"	"	"
Toluene	ND		"	0.845	"	"	"	"	"
trans-1,2-Dichloroethene	ND		"	0.845	"	"	"	"	"
trans-1,3-Dichloropropene	ND		"	0.845	"	"	"	"	"
trans-1,4-Dichloro-2-butene	ND		"	4.22	"	"	"	"	"
Trichloroethene	ND		"	0.845	"	"	"	"	"
Trichlorofluoromethane	ND		"	0.845	"	"	"	"	"
Vinyl Acetate	ND		"	4.22	"	"	"	"	"
Vinyl chloride	ND		"	4.22	"	"	"	"	"
Surr: 1,2-Dichloroethane-d4 (80-120%)	*92 %*					"	"	"	"
Surr: 4-Bromofluorobenzene (80-120%)	*92 %*					"	"	"	"
Surr: Dibromofluoromethane (80-120%)	*97 %*					"	"	"	"

Myounghee Noh & Associates	Work Order: HRI0096	Received:	09/18/08
99-1046 Iwaena Street - Suite 210A		Reported:	10/03/08 09:04
Aiea, HI 96701	Project: Ewa Makai Middle Phase II		
Adam Custer	Project Number: Ewa Makai Middle Phase II, 20691		

ANALYTICAL REPORT

Analyte	Sample Result	Data Qualifiers	Units	Rpt Limit	Dilution	Date Analyzed	Prep Date	Seq/ Batch	Method
Sample ID: HRI0096-04 (691 DU1-S2.5-2 - Solid/Soil) - cont.						**Sampled: 09/17/08 17:30**		**Recvd: 09/18/08 13:50**	
Volatile Organic Compounds by EPA 8260B - cont.									
Surr: Toluene-d8 (80-120%)	*94 %*					"	"	"	"

TestAmerica
THE LEADER IN ENVIRONMENTAL TESTING
99-193 Aiea Heights Drive, Suite 121 Aiea, HI 96701 * 808-486-5227 * Fax 808-486-2456

Myounghee Noh & Associates	Work Order: HRI0096	Received:	09/18/08
99-1046 Iwaena Street - Suite 210A		Reported:	10/03/08 09:04
Aiea, HI 96701	Project: Ewa Makai Middle Phase II		
Adam Custer	Project Number: Ewa Makai Middle Phase II, 20691		

ANALYTICAL REPORT

Analyte	Sample Result	Data Qualifiers	Units	Rpt Limit	Dilution	Date Analyzed	Prep Date	Seq/ Batch	Method
Sample ID: HRI0096-05 (691 DU1-S2.5-3 - Solid/Soil)						**Sampled: 09/17/08 17:30**		**Recvd: 09/18/08 13:50**	
Extractable Petroleum Hydrocarbons by 8015M									
DRO	ND		mg/kg	3.93	1	09/30/08 08:49	09/23/08	8123010	SW8015M
Surr: o-Terphenyl (35-120%)	*107 %*					"	"	"	"
Semivolatile Organics by GC/MS									
1,2,4,5-Tetrachlorobenzene	ND		mg/kg	0.324	1	09/26/08 16:10	09/25/08	8125006	SW8270C
1,2,4-Trichlorobenzene	ND		"	0.324	"	"	"	"	"
1,2-Dichlorobenzene	ND		"	0.324	"	"	"	"	"
1,3-Dichlorobenzene	ND		"	0.324	"	"	"	"	"
1,4-Dichlorobenzene	ND		"	0.324	"	"	"	"	"
1-Chloronaphthalene	ND		"	0.324	"	"	"	"	"
1-Methylnaphthalene	ND		"	0.324	"	"	"	"	"
1-Naphthylamine	ND		"	0.647	"	"	"	"	"
2,3,4,6-Tetrachlorophenol	ND		"	0.324	"	"	"	"	"
2,4,5-Trichlorophenol	ND		"	0.324	"	"	"	"	"
2,4,6-Trichlorophenol	ND		"	0.324	"	"	"	"	"
2,4-Dichlorophenol	ND		"	0.324	"	"	"	"	"
2,4-Dimethylphenol	ND		"	0.324	"	"	"	"	"
2,4-Dinitrophenol	ND		"	1.67	"	"	"	"	"
2,4-Dinitrotoluene	ND		"	0.324	"	"	"	"	"
2,6-Dichlorophenol	ND		"	0.324	"	"	"	"	"
2,6-Dinitrotoluene	ND		"	0.324	"	"	"	"	"
2-Chloronaphthalene	ND		"	0.324	"	"	"	"	"
2-Chlorophenol	ND		"	0.324	"	"	"	"	"
2-Methylnaphthalene	ND		"	0.324	"	"	"	"	"
2-Methylphenol (o-Cresol)	ND		"	0.324	"	"	"	"	"
2-Naphthylamine	ND		"	0.647	"	"	"	"	"
2-Nitroaniline	ND		"	0.324	"	"	"	"	"
2-Nitrophenol	ND		"	0.324	"	"	"	"	"
2-Picoline	ND		"	0.324	"	"	"	"	"
3,3'-Dichlorobenzidine	ND		"	0.324	"	"	"	"	"
3,4-Methylphenol (m,p-Cresol)	ND		"	0.324	"	"	"	"	"
3-Methylcholanthrene	ND		"	0.324	"	"	"	"	"
3-Nitroaniline	ND		"	0.324	"	"	"	"	"
4,6-Dinitro-2-methylphenol	ND		"	0.324	"	"	"	"	"
4-Aminobiphenyl	ND		"	0.647	"	"	"	"	"
4-Bromophenyl phenyl ether	ND		"	0.324	"	"	"	"	"
4-Chloro-3-methylphenol	ND		"	0.324	"	"	"	"	"
4-Chloroaniline	ND		"	0.324	"	"	"	"	"
4-Chlorophenyl phenyl ether	ND		"	0.324	"	"	"	"	"
4-Nitroaniline	ND		"	0.324	"	"	"	"	"
4-Nitrophenol	ND		"	0.324	"	"	"	"	"
7,12-Dimethylbenz (a) anthracene	ND		"	0.324	"	"	"	"	"
a,a-Dimethylphenethylamine	ND		"	0.324	"	"	"	"	"
Acenaphthene	ND		"	0.324	"	"	"	"	"
Acenaphthylene	ND		"	0.324	"	"	"	"	"
Acetophenone	ND		"	0.324	"	"	"	"	"
Aniline	ND		"	0.324	"	"	"	"	"

Myounghee Noh & Associates	Work Order: HRI0096	Received:	09/18/08
99-1046 Iwaena Street - Suite 210A		Reported:	10/03/08 09:04
Aiea, HI 96701	Project: Ewa Makai Middle Phase II		
Adam Custer	Project Number: Ewa Makai Middle Phase II, 20691		

ANALYTICAL REPORT

Analyte	Sample Result	Data Qualifiers	Units	Rpt Limit	Dilution	Date Analyzed	Prep Date	Seq/ Batch	Method
Sample ID: HRI0096-05 (691 DU1-S2.5-3 - Solid/Soil) - cont.					**Sampled: 09/17/08 17:30**		**Recvd: 09/18/08 13:50**		
Semivolatile Organics by GC/MS - cont.									
Anthracene	ND		"	0.324	"	"	"	"	-
Azobenzene	ND		"	0.324	"	"	"	"	-
Benzidine	ND		"	1.67	"	"	"	"	-
Benzo (a) anthracene	ND		"	0.324	"	"	"	"	-
Benzo (a) pyrene	ND		"	0.324	"	"	"	"	-
Benzo (b) fluoranthene	ND		"	0.324	"	"	"	"	-
Benzo (g,h,i) perylene	ND		"	0.324	"	"	"	"	-
Benzo (k) fluoranthene	ND		"	0.324	"	"	"	"	-
Benzoic acid	ND		"	0.324	"	"	"	"	-
Benzyl alcohol	ND		"	0.324	"	"	"	"	-
Bis(2-chloroethoxy)methane	ND		"	0.324	"	"	"	"	-
Bis(2-chloroethyl)ether	ND		"	0.324	"	"	"	"	-
Bis(2-chloroisopropyl) ether	ND		"	0.324	"	"	"	"	-
Bis(2-ethylhexyl)phthalate	ND		"	0.324	"	"	"	"	-
Butyl benzyl phthalate	ND		"	0.324	"	"	"	"	-
Chrysene	ND		"	0.324	"	"	"	"	-
Dibenz (a,j) acridine	ND		"	0.324	"	"	"	"	-
Dibenzo (a,h) anthracene	ND		"	0.324	"	"	"	"	-
Dibenzofuran	ND		"	0.324	"	"	"	"	-
Diethyl phthalate	ND		"	0.324	"	"	"	"	-
Dimethyl phthalate	ND		"	0.324	"	"	"	"	-
Dimethylaminoazobenzene	ND		"	0.324	"	"	"	"	-
Di-n-butyl phthalate	ND		"	0.324	"	"	"	"	-
Di-n-octyl phthalate	ND		"	0.324	"	"	"	"	-
Ethyl Methanesulfonate	ND		"	0.324	"	"	"	"	-
Fluoranthene	ND		"	0.324	"	"	"	"	-
Fluorene	ND		"	0.324	"	"	"	"	-
Hexachlorobenzene	ND		"	0.324	"	"	"	"	-
Hexachlorobutadiene	ND		"	0.324	"	"	"	"	-
Hexachlorocyclopentadiene	ND		"	0.324	"	"	"	"	-
Hexachloroethane	ND		"	0.324	"	"	"	"	-
Indeno (1,2,3-cd) pyrene	ND		"	0.324	"	"	"	"	-
Isophorone	ND		"	0.324	"	"	"	"	-
Methyl Methanesulfonate	ND		"	0.324	"	"	"	"	-
Naphthalene	ND		"	0.324	"	"	"	"	-
Nitrobenzene	ND		"	0.324	"	"	"	"	-
N-Nitrosodimethylamine	ND		"	0.324	"	"	"	"	-
N-Nitrosodi-n-butylamine	ND		"	0.324	"	"	"	"	-
N-Nitrosodi-n-propylamine	ND		"	0.324	"	"	"	"	-
N-Nitrosodiphenylamine	ND		"	0.324	"	"	"	"	-
N-Nitrosopiperidine	ND		"	0.324	"	"	"	"	-
Pentachloronitrobenzene	ND		"	0.324	"	"	"	"	-
Pentachlorophenol	ND		"	0.324	"	"	"	"	-
Phenacetin	ND		"	0.324	"	"	"	"	-
Phenanthrene	ND		"	0.324	"	"	"	"	-
Phenol	ND		"	0.324	"	"	"	"	-

TestAmerica
THE LEADER IN ENVIRONMENTAL TESTING
99-193 Aiea Heights Drive, Suite 121 Aiea, HI 96701 * 808-486-5227 * Fax 808-486-2456

Myounghee Noh & Associates	Work Order: HRI0096	Received:	09/18/08
99-1046 Iwaena Street - Suite 210A		Reported:	10/03/08 09:04
Aiea, HI 96701	Project: Ewa Makai Middle Phase II		
Adam Custer	Project Number: Ewa Makai Middle Phase II, 20691		

ANALYTICAL REPORT

Analyte	Sample Result	Data Qualifiers	Units	Rpt Limit	Dilution	Date Analyzed	Prep Date	Seq/ Batch	Method
Sample ID: HRI0096-05 (691 DU1-S2.5-3 - Solid/Soil) - cont.					**Sampled: 09/17/08 17:30**		**Recvd: 09/18/08 13:50**		
Semivolatile Organics by GC/MS - cont.									
Pronamide	ND		"	0.324	"	"	"	"	-
Pyrene	ND		"	0.324	"	"	"	"	-
Pyridine	ND		"	0.324	"	"	"	"	-
Surr: 2,4,6-Tribromophenol (40-120%)	*67 %*					"	"	"	"
Surr: 2-Fluorobiphenyl (45-120%)	*74 %*					"	"	"	"
Surr: 2-Fluorophenol (30-120%)	*64 %*					"	"	"	"
Surr: Nitrobenzene-d5 (35-120%)	*66 %*					"	"	"	"
Surr: Phenol-d6 (40-120%)	*60 %*					"	"	"	"
Surr: Terphenyl-d14 (40-130%)	*86 %*					"	"	"	"
Total Metals by SW 846 Series Methods									
Arsenic	**12.8**		mg/kg	9.71	10	09/30/08 15:37	09/30/08	8130006	SW6010B
Barium	**64.5**		"	19.4	"	"	"	"	-
Cadmium	ND	RL3	"	9.71	"	"	"	"	-
Chromium	**41.7**		"	9.71	"	"	"	"	-
Lead	ND	RL3	"	19.4	"	"	"	"	-
Mercury	**0.0477**		"	0.00472	1	09/29/08 17:45	09/29/08	8129008	SW7471
Selenium	ND	RL3	"	19.4	10	09/30/08 15:37	09/30/08	8130006	SW6010B
Silver	ND	RL3	"	9.71	"	"	"	"	-
Volatile Organic Compounds by EPA 8260B									
1,1,1,2-Tetrachloroethane	ND		mg/kg	0.831	50	09/24/08 15:50	09/24/08	8125011	SW8260B
1,1,1-Trichloroethane	ND		"	0.831	"	"	"	"	-
1,1,2,2-Tetrachloroethane	ND		"	0.831	"	"	"	"	-
1,1,2-Trichloroethane	ND		"	0.831	"	"	"	"	-
1,1-Dichloroethane	ND		"	4.15	"	"	"	"	-
1,1-Dichloroethene	ND		"	0.831	"	"	"	"	-
1,1-Dichloropropene	ND		"	0.831	"	"	"	"	-
1,2,3-Trichlorobenzene	ND		"	0.831	"	"	"	"	-
1,2,3-Trichloropropane	ND		"	0.831	"	"	"	"	-
1,2,4-Trichlorobenzene	ND		"	4.15	"	"	"	"	-
1,2,4-Trimethylbenzene	ND		"	0.831	"	"	"	"	-
1,2-Dibromo-3-chloropropane	ND		"	0.831	"	"	"	"	-
1,2-Dibromoethane (EDB)	ND		"	0.831	"	"	"	"	-
1,2-Dichlorobenzene	ND		"	4.15	"	"	"	"	-
1,2-Dichloroethane	ND		"	0.831	"	"	"	"	-
1,2-Dichloropropane	ND		"	0.831	"	"	"	"	-
1,3,5-Trimethylbenzene	ND		"	0.831	"	"	"	"	-
1,3-Dichlorobenzene	ND		"	4.15	"	"	"	"	-
1,3-Dichloropropane	ND		"	0.831	"	"	"	"	-
1,4-Dichlorobenzene	ND		"	4.15	"	"	"	"	-
2,2-Dichloropropane	ND		"	0.831	"	"	"	"	-
2-Butanone (MEK)	ND		"	4.15	"	"	"	"	-
2-Chlorotoluene	ND		"	0.831	"	"	"	"	-
2-Hexanone	ND		"	4.15	"	"	"	"	-
4-Chlorotoluene	ND		"	0.831	"	"	"	"	-
4-Methyl-2-pentanone (MIBK)	ND		"	4.15	"	"	"	"	-

Myounghee Noh & Associates	Work Order: HRI0096	Received:	09/18/08
99-1046 Iwaena Street - Suite 210A		Reported:	10/03/08 09:04
Aiea, HI 96701	Project: Ewa Makai Middle Phase II		
Adam Custer	Project Number: Ewa Makai Middle Phase II, 20691		

ANALYTICAL REPORT

Analyte	Sample Result	Data Qualifiers	Units	Rpt Limit	Dilution	Date Analyzed	Prep Date	Seq/ Batch	Method
Sample ID: HRI0096-05 (691 DU1-S2.5-3 - Solid/Soil) - cont.					**Sampled: 09/17/08 17:30**		**Recvd: 09/18/08 13:50**		
Volatile Organic Compounds by EPA 8260B - cont.									
Acetone	ND		"	4.15	"	"	"	"	"
Acrylonitrile	ND		"	4.15	"	"	"	"	"
Benzene	ND		"	0.831	"	"	"	"	"
Bromobenzene	ND		"	0.831	"	"	"	"	"
Bromochloromethane	ND		"	4.15	"	"	"	"	"
Bromodichloromethane	ND		"	0.831	"	"	"	"	"
Bromoform	ND		"	0.831	"	"	"	"	"
Bromomethane	ND		"	8.31	"	"	"	"	"
Carbon disulfide	ND		"	0.831	"	"	"	"	"
Carbon Tetrachloride	ND		"	0.831	"	"	"	"	"
Chlorobenzene	ND		"	0.831	"	"	"	"	"
Chlorodibromomethane	ND		"	0.831	"	"	"	"	"
Chloroethane	ND		"	4.15	"	"	"	"	"
Chloroform	ND		"	0.831	"	"	"	"	"
Chloromethane	ND		"	4.15	"	"	"	"	"
cis-1,2-Dichloroethene	ND		"	0.831	"	"	"	"	"
cis-1,3-Dichloropropene	ND		"	0.831	"	"	"	"	"
Dibromomethane	ND		"	0.831	"	"	"	"	"
Dichlorodifluoromethane	ND		"	4.15	"	"	"	"	"
Ethylbenzene	ND		"	0.831	"	"	"	"	"
Hexachlorobutadiene	ND		"	4.15	"	"	"	"	"
Iodomethane	ND		"	4.15	"	"	"	"	"
Isopropylbenzene	ND		"	0.831	"	"	"	"	"
m,p-Xylene	ND		"	0.831	"	"	"	"	"
Methyl tert-Butyl Ether	ND		"	0.415	"	"	"	"	"
Methylene Chloride	ND		"	4.15	"	"	"	"	"
Naphthalene	ND		"	4.15	"	"	"	"	"
n-Butylbenzene	ND		"	0.831	"	"	"	"	"
n-Propylbenzene	ND		"	0.831	"	"	"	"	"
o-Xylene	ND		"	0.831	"	"	"	"	"
p-Isopropyltoluene	ND		"	0.831	"	"	"	"	"
sec-Butylbenzene	ND		"	0.831	"	"	"	"	"
Styrene	ND		"	0.831	"	"	"	"	"
tert-Butylbenzene	ND		"	0.831	"	"	"	"	"
Tetrachloroethene	ND		"	0.831	"	"	"	"	"
Toluene	ND		"	0.831	"	"	"	"	"
trans-1,2-Dichloroethene	ND		"	0.831	"	"	"	"	"
trans-1,3-Dichloropropene	ND		"	0.831	"	"	"	"	"
trans-1,4-Dichloro-2-butene	ND		"	4.15	"	"	"	"	"
Trichloroethene	ND		"	0.831	"	"	"	"	"
Trichlorofluoromethane	ND		"	0.831	"	"	"	"	"
Vinyl Acetate	ND		"	4.15	"	"	"	"	"
Vinyl chloride	ND		"	4.15	"	"	"	"	"
Surr: 1,2-Dichloroethane-d4 (80-120%)	*94 %*					"	"	"	"
Surr: 4-Bromofluorobenzene (80-120%)	*98 %*					"	"	"	"
Surr: Dibromofluoromethane (80-120%)	*101 %*					"	"	"	"

Myounghee Noh & Associates	Work Order: HRI0096	Received:	09/18/08
99-1046 Iwaena Street - Suite 210A		Reported:	10/03/08 09:04
Aiea, HI 96701	Project: Ewa Makai Middle Phase II		
Adam Custer	Project Number: Ewa Makai Middle Phase II, 20691		

ANALYTICAL REPORT

Analyte	Sample Result	Data Qualifiers	Units	Rpt Limit	Dilution	Date Analyzed	Prep Date	Seq/ Batch	Method
Sample ID: HRI0096-05 (691 DU1-S2.5-3 - Solid/Soil) - cont.					**Sampled: 09/17/08 17:30**		**Recvd: 09/18/08 13:50**		
Volatile Organic Compounds by EPA 8260B - cont.									
Surr: Toluene-d8 (80-120%)	*93 %*					"	"	"	"

Myounghee Noh & Associates	Work Order: HRI0096	Received:	09/18/08
99-1046 Iwaena Street - Suite 210A		Reported:	10/03/08 09:04
Aiea, HI 96701	Project: Ewa Makai Middle Phase II		
Adam Custer	Project Number: Ewa Makai Middle Phase II, 20691		

ANALYTICAL REPORT

Analyte	Sample Result	Data Qualifiers	Units	Rpt Limit	Dilution	Date Analyzed	Prep Date	Seq/ Batch	Method
Sample ID: HRI0096-06 (691 DU1-S5.5 - Solid/Soil)					**Sampled:**	**09/17/08 17:30**		**Recvd: 09/18/08 13:50**	
Extractable Petroleum Hydrocarbons by 8015M									
DRO	ND		mg/kg	3.96	1	10/01/08 22:19	09/23/08	8123010	SW8015M
Surr: o-Terphenyl (35-120%)	*102 %*					"	"	"	"
Semivolatile Organics by GC/MS									
1,2,4,5-Tetrachlorobenzene	ND		mg/kg	0.327	1	09/26/08 16:51	09/25/08	8125006	SW8270C
1,2,4-Trichlorobenzene	ND		"	0.327	"	"	"	"	"
1,2-Dichlorobenzene	ND		"	0.327	"	"	"	"	"
1,3-Dichlorobenzene	ND		"	0.327	"	"	"	"	"
1,4-Dichlorobenzene	ND		"	0.327	"	"	"	"	"
1-Chloronaphthalene	ND		"	0.327	"	"	"	"	"
1-Methylnaphthalene	ND		"	0.327	"	"	"	"	"
1-Naphthylamine	ND		"	0.653	"	"	"	"	"
2,3,4,6-Tetrachlorophenol	ND		"	0.327	"	"	"	"	"
2,4,5-Trichlorophenol	ND		"	0.327	"	"	"	"	"
2,4,6-Trichlorophenol	ND		"	0.327	"	"	"	"	"
2,4-Dichlorophenol	ND		"	0.327	"	"	"	"	"
2,4-Dimethylphenol	ND		"	0.327	"	"	"	"	"
2,4-Dinitrophenol	ND		"	1.68	"	"	"	"	"
2,4-Dinitrotoluene	ND		"	0.327	"	"	"	"	"
2,6-Dichlorophenol	ND		"	0.327	"	"	"	"	"
2,6-Dinitrotoluene	ND		"	0.327	"	"	"	"	"
2-Chloronaphthalene	ND		"	0.327	"	"	"	"	"
2-Chlorophenol	ND		"	0.327	"	"	"	"	"
2-Methylnaphthalene	ND		"	0.327	"	"	"	"	"
2-Methylphenol (o-Cresol)	ND		"	0.327	"	"	"	"	"
2-Naphthylamine	ND		"	0.653	"	"	"	"	"
2-Nitroaniline	ND		"	0.327	"	"	"	"	"
2-Nitrophenol	ND		"	0.327	"	"	"	"	"
2-Picoline	ND		"	0.327	"	"	"	"	"
3,3'-Dichlorobenzidine	ND		"	0.327	"	"	"	"	"
3,4-Methylphenol (m,p-Cresol)	ND		"	0.327	"	"	"	"	"
3-Methylcholanthrene	ND		"	0.327	"	"	"	"	"
3-Nitroaniline	ND		"	0.327	"	"	"	"	"
4,6-Dinitro-2-methylphenol	ND		"	0.327	"	"	"	"	"
4-Aminobiphenyl	ND		"	0.653	"	"	"	"	"
4-Bromophenyl phenyl ether	ND		"	0.327	"	"	"	"	"
4-Chloro-3-methylphenol	ND		"	0.327	"	"	"	"	"
4-Chloroaniline	ND		"	0.327	"	"	"	"	"
4-Chlorophenyl phenyl ether	ND		"	0.327	"	"	"	"	"
4-Nitroaniline	ND		"	0.327	"	"	"	"	"
4-Nitrophenol	ND		"	0.327	"	"	"	"	"
7,12-Dimethylbenz (a) anthracene	ND		"	0.327	"	"	"	"	"
a,a-Dimethylphenethylamine	ND		"	0.327	"	"	"	"	"
Acenaphthene	ND		"	0.327	"	"	"	"	"
Acenaphthylene	ND		"	0.327	"	"	"	"	"
Acetophenone	ND		"	0.327	"	"	"	"	"
Aniline	ND		"	0.327	"	"	"	"	"

Myounghee Noh & Associates	Work Order: HRI0096	Received:	09/18/08
99-1046 Iwaena Street - Suite 210A		Reported:	10/03/08 09:04
Aiea, HI 96701	Project: Ewa Makai Middle Phase II		
Adam Custer	Project Number: Ewa Makai Middle Phase II, 20691		

ANALYTICAL REPORT

Analyte	Sample Result	Data Qualifiers	Units	Rpt Limit	Dilution	Date Analyzed	Prep Date	Seq/ Batch	Method
Sample ID: HRI0096-06 (691 DU1-S5.5 - Solid/Soil) - cont.					**Sampled:**	**09/17/08 17:30**		**Recvd: 09/18/08 13:50**	
Semivolatile Organics by GC/MS - cont.									
Anthracene	ND		"	0.327	"	"	"	"	"
Azobenzene	ND		"	0.327	"	"	"	"	"
Benzidine	ND		"	1.68	"	"	"	"	"
Benzo (a) anthracene	ND		"	0.327	"	"	"	"	"
Benzo (a) pyrene	ND		"	0.327	"	"	"	"	"
Benzo (b) fluoranthene	ND		"	0.327	"	"	"	"	"
Benzo (g,h,i) perylene	ND		"	0.327	"	"	"	"	"
Benzo (k) fluoranthene	ND		"	0.327	"	"	"	"	"
Benzoic acid	ND		"	0.327	"	"	"	"	"
Benzyl alcohol	ND		"	0.327	"	"	"	"	"
Bis(2-chloroethoxy)methane	ND		"	0.327	"	"	"	"	"
Bis(2-chloroethyl)ether	ND		"	0.327	"	"	"	"	"
Bis(2-chloroisopropyl) ether	ND		"	0.327	"	"	"	"	"
Bis(2-ethylhexyl)phthalate	ND		"	0.327	"	"	"	"	"
Butyl benzyl phthalate	ND		"	0.327	"	"	"	"	"
Chrysene	ND		"	0.327	"	"	"	"	"
Dibenz (a,j) acridine	ND		"	0.327	"	"	"	"	"
Dibenzo (a,h) anthracene	ND		"	0.327	"	"	"	"	"
Dibenzofuran	ND		"	0.327	"	"	"	"	"
Diethyl phthalate	ND		"	0.327	"	"	"	"	"
Dimethyl phthalate	ND		"	0.327	"	"	"	"	"
Dimethylaminoazobenzene	ND		"	0.327	"	"	"	"	"
Di-n-butyl phthalate	ND		"	0.327	"	"	"	"	"
Di-n-octyl phthalate	ND		"	0.327	"	"	"	"	"
Ethyl Methanesulfonate	ND		"	0.327	"	"	"	"	"
Fluoranthene	ND		"	0.327	"	"	"	"	"
Fluorene	ND		"	0.327	"	"	"	"	"
Hexachlorobenzene	ND		"	0.327	"	"	"	"	"
Hexachlorobutadiene	ND		"	0.327	"	"	"	"	"
Hexachlorocyclopentadiene	ND		"	0.327	"	"	"	"	"
Hexachloroethane	ND		"	0.327	"	"	"	"	"
Indeno (1,2,3-cd) pyrene	ND		"	0.327	"	"	"	"	"
Isophorone	ND		"	0.327	"	"	"	"	"
Methyl Methanesulfonate	ND		"	0.327	"	"	"	"	"
Naphthalene	ND		"	0.327	"	"	"	"	"
Nitrobenzene	ND		"	0.327	"	"	"	"	"
N-Nitrosodimethylamine	ND		"	0.327	"	"	"	"	"
N-Nitrosodi-n-butylamine	ND		"	0.327	"	"	"	"	"
N-Nitrosodi-n-propylamine	ND		"	0.327	"	"	"	"	"
N-Nitrosodiphenylamine	ND		"	0.327	"	"	"	"	"
N-Nitrosopiperidine	ND		"	0.327	"	"	"	"	"
Pentachloronitrobenzene	ND		"	0.327	"	"	"	"	"
Pentachlorophenol	ND		"	0.327	"	"	"	"	"
Phenacetin	ND		"	0.327	"	"	"	"	"
Phenanthrene	ND		"	0.327	"	"	"	"	"
Phenol	ND		"	0.327	"	"	"	"	"

Myounghee Noh & Associates	Work Order: HRI0096	Received:	09/18/08
99-1046 Iwaena Street - Suite 210A		Reported:	10/03/08 09:04
Aiea, HI 96701	Project: Ewa Makai Middle Phase II		
Adam Custer	Project Number: Ewa Makai Middle Phase II, 20691		

ANALYTICAL REPORT

Analyte	Sample Result	Data Qualifiers	Units	Rpt Limit	Dilution	Date Analyzed	Prep Date	Seq/ Batch	Method
Sample ID: HRI0096-06 (691 DU1-S5.5 - Solid/Soil) - cont.					**Sampled:**	**09/17/08 17:30**		**Recvd: 09/18/08 13:50**	
Semivolatile Organics by GC/MS - cont.									
Pronamide	ND		"	0.327	"	"	"	"	"
Pyrene	ND		"	0.327	"	"	"	"	"
Pyridine	ND		"	0.327	"	"	"	"	"
Surr: 2,4,6-Tribromophenol (40-120%)	*69 %*					"	"	"	"
Surr: 2-Fluorobiphenyl (45-120%)	*76 %*					"	"	"	"
Surr: 2-Fluorophenol (30-120%)	*69 %*					"	"	"	"
Surr: Nitrobenzene-d5 (35-120%)	*75 %*					"	"	"	"
Surr: Phenol-d6 (40-120%)	*69 %*					"	"	"	"
Surr: Terphenyl-d14 (40-130%)	*80 %*					"	"	"	"
Total Metals by SW 846 Series Methods									
Arsenic	ND	RL3	mg/kg	9.52	10	09/30/08 15:42	09/30/08	8130006	SW6010B
Barium	**33.1**		"	19.0	"	"	"	"	"
Cadmium	ND	RL3	"	9.52	"	"	"	"	"
Chromium	**22.3**		"	9.52	"	"	"	"	"
Lead	ND	RL3	"	19.0	"	"	"	"	"
Mercury	**0.00881**		"	0.00455	1	09/29/08 17:46	09/29/08	8129008	SW7471
Selenium	ND	RL3	"	19.0	10	09/30/08 15:42	09/30/08	8130006	SW6010B
Silver	ND	RL3	"	9.52	"	"	"	"	"
Volatile Organic Compounds by EPA 8260B									
1,1,1,2-Tetrachloroethane	ND		mg/kg	1.15	50	09/24/08 16:16	09/24/08	8125011	SW8260B
1,1,1-Trichloroethane	ND		"	1.15	"	"	"	"	"
1,1,2,2-Tetrachloroethane	ND		"	1.15	"	"	"	"	"
1,1,2-Trichloroethane	ND		"	1.15	"	"	"	"	"
1,1-Dichloroethane	ND		"	5.76	"	"	"	"	"
1,1-Dichloroethene	ND		"	1.15	"	"	"	"	"
1,1-Dichloropropene	ND		"	1.15	"	"	"	"	"
1,2,3-Trichlorobenzene	ND		"	1.15	"	"	"	"	"
1,2,3-Trichloropropane	ND		"	1.15	"	"	"	"	"
1,2,4-Trichlorobenzene	ND		"	5.76	"	"	"	"	"
1,2,4-Trimethylbenzene	ND		"	1.15	"	"	"	"	"
1,2-Dibromo-3-chloropropane	ND		"	1.15	"	"	"	"	"
1,2-Dibromoethane (EDB)	ND		"	1.15	"	"	"	"	"
1,2-Dichlorobenzene	ND		"	5.76	"	"	"	"	"
1,2-Dichloroethane	ND		"	1.15	"	"	"	"	"
1,2-Dichloropropane	ND		"	1.15	"	"	"	"	"
1,3,5-Trimethylbenzene	ND		"	1.15	"	"	"	"	"
1,3-Dichlorobenzene	ND		"	5.76	"	"	"	"	"
1,3-Dichloropropane	ND		"	1.15	"	"	"	"	"
1,4-Dichlorobenzene	ND		"	5.76	"	"	"	"	"
2,2-Dichloropropane	ND		"	1.15	"	"	"	"	"
2-Butanone (MEK)	ND		"	5.76	"	"	"	"	"
2-Chlorotoluene	ND		"	1.15	"	"	"	"	"
2-Hexanone	ND		"	5.76	"	"	"	"	"
4-Chlorotoluene	ND		"	1.15	"	"	"	"	"
4-Methyl-2-pentanone (MIBK)	ND		"	5.76	"	"	"	"	"

Myounghee Noh & Associates	Work Order: HRI0096	Received:	09/18/08
99-1046 Iwaena Street - Suite 210A		Reported:	10/03/08 09:04
Aiea, HI 96701	Project: Ewa Makai Middle Phase II		
Adam Custer	Project Number: Ewa Makai Middle Phase II, 20691		

ANALYTICAL REPORT

Analyte	Sample Result	Data Qualifiers	Units	Rpt Limit	Dilution	Date Analyzed	Prep Date	Seq/ Batch	Method
Sample ID: HRI0096-06 (691 DU1-S5.5 - Solid/Soil) - cont.					**Sampled:**	**09/17/08 17:30**		**Recvd: 09/18/08 13:50**	
Volatile Organic Compounds by EPA 8260B - cont.									
Acetone	ND		"	5.76	"	"	"	"	"
Acrylonitrile	ND		"	5.76	"	"	"	"	"
Benzene	ND		"	1.15	"	"	"	"	"
Bromobenzene	ND		"	1.15	"	"	"	"	"
Bromochloromethane	ND		"	5.76	"	"	"	"	"
Bromodichloromethane	ND		"	1.15	"	"	"	"	"
Bromoform	ND		"	1.15	"	"	"	"	"
Bromomethane	ND		"	11.5	"	"	"	"	"
Carbon disulfide	ND		"	1.15	"	"	"	"	"
Carbon Tetrachloride	ND		"	1.15	"	"	"	"	"
Chlorobenzene	ND		"	1.15	"	"	"	"	"
Chlorodibromomethane	ND		"	1.15	"	"	"	"	"
Chloroethane	ND		"	5.76	"	"	"	"	"
Chloroform	ND		"	1.15	"	"	"	"	"
Chloromethane	ND		"	5.76	"	"	"	"	"
cis-1,2-Dichloroethene	ND		"	1.15	"	"	"	"	"
cis-1,3-Dichloropropene	ND		"	1.15	"	"	"	"	"
Dibromomethane	ND		"	1.15	"	"	"	"	"
Dichlorodifluoromethane	ND		"	5.76	"	"	"	"	"
Ethylbenzene	ND		"	1.15	"	"	"	"	"
Hexachlorobutadiene	ND		"	5.76	"	"	"	"	"
Iodomethane	ND		"	5.76	"	"	"	"	"
Isopropylbenzene	ND		"	1.15	"	"	"	"	"
m,p-Xylene	ND		"	1.15	"	"	"	"	"
Methyl tert-Butyl Ether	ND		"	0.576	"	"	"	"	"
Methylene Chloride	ND		"	5.76	"	"	"	"	"
Naphthalene	ND		"	5.76	"	"	"	"	"
n-Butylbenzene	ND		"	1.15	"	"	"	"	"
n-Propylbenzene	ND		"	1.15	"	"	"	"	"
o-Xylene	ND		"	1.15	"	"	"	"	"
p-Isopropyltoluene	ND		"	1.15	"	"	"	"	"
sec-Butylbenzene	ND		"	1.15	"	"	"	"	"
Styrene	ND		"	1.15	"	"	"	"	"
tert-Butylbenzene	ND		"	1.15	"	"	"	"	"
Tetrachloroethene	ND		"	1.15	"	"	"	"	"
Toluene	ND		"	1.15	"	"	"	"	"
trans-1,2-Dichloroethene	ND		"	1.15	"	"	"	"	"
trans-1,3-Dichloropropene	ND		"	1.15	"	"	"	"	"
trans-1,4-Dichloro-2-butene	ND		"	5.76	"	"	"	"	"
Trichloroethene	ND		"	1.15	"	"	"	"	"
Trichlorofluoromethane	ND		"	1.15	"	"	"	"	"
Vinyl Acetate	ND		"	5.76	"	"	"	"	"
Vinyl chloride	ND		"	5.76	"	"	"	"	"
Surr: 1,2-Dichloroethane-d4 (80-120%)	*96 %*					"	"	"	"
Surr: 4-Bromofluorobenzene (80-120%)	*98 %*					"	"	"	"
Surr: Dibromofluoromethane (80-120%)	*100 %*					"	"	"	"

Myounghee Noh & Associates	Work Order: HRI0096	Received:	09/18/08
99-1046 Iwaena Street - Suite 210A		Reported:	10/03/08 09:04
Aiea, HI 96701	Project: Ewa Makai Middle Phase II		
Adam Custer	Project Number: Ewa Makai Middle Phase II, 20691		

ANALYTICAL REPORT

Analyte	Sample Result	Data Qualifiers	Units	Rpt Limit	Dilution	Date Analyzed	Prep Date	Seq/ Batch	Method
Sample ID: HRI0096-06 (691 DU1-S5.5 - Solid/Soil) - cont.						**Sampled: 09/17/08 17:30**		**Recvd: 09/18/08 13:50**	
Volatile Organic Compounds by EPA 8260B - cont.									
Surr: Toluene-d8 (80-120%)	*93 %*					"	"	"	"

TestAmerica
THE LEADER IN ENVIRONMENTAL TESTING
99-193 Aiea Heights Drive, Suite 121 Aiea, HI 96701 * 808-486-5227 * Fax 808-486-2456

Myounghee Noh & Associates	Work Order: HRI0096	Received:	09/18/08
99-1046 Iwaena Street - Suite 210A		Reported:	10/03/08 09:04
Aiea, HI 96701	Project: Ewa Makai Middle Phase II		
Adam Custer	Project Number: Ewa Makai Middle Phase II, 20691		

LABORATORY BLANK QC DATA

Analyte	Source Result	Spike Level	Units	MDL	MRL	Result	Dup Result	% REC	Dup %REC	% REC Limits	RPD	RPD Limit	Q
Extractable Petroleum Hydrocarbons by 8015M													
Batch\Seq: 8123010 Extracted: 09/23/08													
Blank Analyzed: 09/29/2008 (8123010-BLK1)													
DRO			mg/kg	N/A	4.00	ND							
Surrogate: o-Terphenyl			mg/kg					*99*		*35-120*			
Semivolatile Organics by GC/MS													
Batch\Seq: 8125006 Extracted: 09/25/08													
Blank Analyzed: 09/26/2008 (8125006-BLK1)													
1,2,4,5-Tetrachlorobenzene			mg/kg	N/A	0.330	ND							
1,2,4-Trichlorobenzene			mg/kg	N/A	0.330	ND							
1,2-Dichlorobenzene			mg/kg	N/A	0.330	ND							
1,3-Dichlorobenzene			mg/kg	N/A	0.330	ND							
1,4-Dichlorobenzene			mg/kg	N/A	0.330	ND							
1-Chloronaphthalene			mg/kg	N/A	0.330	ND							
1-Methylnaphthalene			mg/kg	N/A	0.330	ND							
1-Naphthylamine			mg/kg	N/A	0.660	ND							
2,3,4,6-Tetrachlorophenol			mg/kg	N/A	0.330	ND							
2,4,5-Trichlorophenol			mg/kg	N/A	0.330	ND							
2,4,6-Trichlorophenol			mg/kg	N/A	0.330	ND							
2,4-Dichlorophenol			mg/kg	N/A	0.330	ND							
2,4-Dimethylphenol			mg/kg	N/A	0.330	ND							
2,4-Dinitrophenol			mg/kg	N/A	1.70	ND							
2,4-Dinitrotoluene			mg/kg	N/A	0.330	ND							
2,6-Dichlorophenol			mg/kg	N/A	0.330	ND							
2,6-Dinitrotoluene			mg/kg	N/A	0.330	ND							
2-Chloronaphthalene			mg/kg	N/A	0.330	ND							
2-Chlorophenol			mg/kg	N/A	0.330	ND							
2-Methylnaphthalene			mg/kg	N/A	0.330	ND							
2-Methylphenol (o-Cresol)			mg/kg	N/A	0.330	ND							
2-Naphthylamine			mg/kg	N/A	0.660	ND							
2-Nitroaniline			mg/kg	N/A	0.330	ND							
2-Nitrophenol			mg/kg	N/A	0.330	ND							
2-Picoline			mg/kg	N/A	0.330	ND							
3,3'-Dichlorobenzidine			mg/kg	N/A	0.330	ND							
3,4-Methylphenol (m,p-Cresol)			mg/kg	N/A	0.330	ND							
3-Methylcholanthrene			mg/kg	N/A	0.330	ND							
3-Nitroaniline			mg/kg	N/A	0.330	ND							
4,6-Dinitro-2-methylphenol			mg/kg	N/A	0.330	ND							
4-Aminobiphenyl			mg/kg	N/A	0.660	ND							
4-Bromophenyl phenyl ether			mg/kg	N/A	0.330	ND							
4-Chloro-3-methylphenol			mg/kg	N/A	0.330	ND							
4-Chloroaniline			mg/kg	N/A	0.330	ND							
4-Chlorophenyl phenyl ether			mg/kg	N/A	0.330	ND							
4-Nitroaniline			mg/kg	N/A	0.330	ND							
4-Nitrophenol			mg/kg	N/A	0.330	ND							
7,12-Dimethylbenz (a) anthracene			mg/kg	N/A	0.330	ND							
a,a-Dimethylphenethylamine			mg/kg	N/A	0.330	ND							

Myounghee Noh & Associates	Work Order: HRI0096	Received:	09/18/08
99-1046 Iwaena Street - Suite 210A		Reported:	10/03/08 09:04
Aiea, HI 96701	Project: Ewa Makai Middle Phase II		
Adam Custer	Project Number: Ewa Makai Middle Phase II, 20691		

LABORATORY BLANK QC DATA

Analyte	Source Result	Spike Level	Units	MDL	MRL	Result	Dup Result	% REC	Dup %REC	% REC Limits	RPD	RPD Limit	Q
Semivolatile Organics by GC/MS													
Batch\Seq: 8I25006 Extracted: 09/25/08													
Blank Analyzed: 09/26/2008 (8I25006-BLK1)													
Acenaphthene			mg/kg	N/A	0.330	ND							
Acenaphthylene			mg/kg	N/A	0.330	ND							
Acetophenone			mg/kg	N/A	0.330	ND							
Aniline			mg/kg	N/A	0.330	ND							
Anthracene			mg/kg	N/A	0.330	ND							
Azobenzene			mg/kg	N/A	0.330	ND							
Benzidine			mg/kg	N/A	1.70	ND							
Benzo (a) anthracene			mg/kg	N/A	0.330	ND							
Benzo (a) pyrene			mg/kg	N/A	0.330	ND							
Benzo (b) fluoranthene			mg/kg	N/A	0.330	ND							
Benzo (g,h,i) perylene			mg/kg	N/A	0.330	ND							
Benzo (k) fluoranthene			mg/kg	N/A	0.330	ND							
Benzoic acid			mg/kg	N/A	0.330	ND							
Benzyl alcohol			mg/kg	N/A	0.330	ND							
Bis(2-chloroethoxy)methane			mg/kg	N/A	0.330	ND							
Bis(2-chloroethyl)ether			mg/kg	N/A	0.330	ND							
Bis(2-chloroisopropyl) ether			mg/kg	N/A	0.330	ND							
Bis(2-ethylhexyl)phthalate			mg/kg	N/A	0.330	ND							
Butyl benzyl phthalate			mg/kg	N/A	0.330	ND							
Chrysene			mg/kg	N/A	0.330	ND							
Dibenz (a,j) acridine			mg/kg	N/A	0.330	ND							
Dibenzo (a,h) anthracene			mg/kg	N/A	0.330	ND							
Dibenzofuran			mg/kg	N/A	0.330	ND							
Diethyl phthalate			mg/kg	N/A	0.330	ND							
Dimethyl phthalate			mg/kg	N/A	0.330	ND							
Dimethylaminoazobenzene			mg/kg	N/A	0.330	ND							
Di-n-butyl phthalate			mg/kg	N/A	0.330	ND							
Di-n-octyl phthalate			mg/kg	N/A	0.330	ND							
Ethyl Methanesulfonate			mg/kg	N/A	0.330	ND							
Fluoranthene			mg/kg	N/A	0.330	ND							
Fluorene			mg/kg	N/A	0.330	ND							
Hexachlorobenzene			mg/kg	N/A	0.330	ND							
Hexachlorobutadiene			mg/kg	N/A	0.330	ND							
Hexachlorocyclopentadiene			mg/kg	N/A	0.330	ND							
Hexachloroethane			mg/kg	N/A	0.330	ND							
Indeno (1,2,3-cd) pyrene			mg/kg	N/A	0.330	ND							
Isophorone			mg/kg	N/A	0.330	ND							
Methyl Methanesulfonate			mg/kg	N/A	0.330	ND							
Naphthalene			mg/kg	N/A	0.330	ND							
Nitrobenzene			mg/kg	N/A	0.330	ND							
N-Nitrosodimethylamine			mg/kg	N/A	0.330	ND							
N-Nitrosodi-n-butylamine			mg/kg	N/A	0.330	ND							
N-Nitrosodi-n-propylamine			mg/kg	N/A	0.330	ND							
N-Nitrosodiphenylamine			mg/kg	N/A	0.330	ND							
N-Nitrosopiperidine			mg/kg	N/A	0.330	ND							

TestAmerica
THE LEADER IN ENVIRONMENTAL TESTING
99-193 Aiea Heights Drive, Suite 121 Aiea, HI 96701 * 808-486-5227 * Fax 808-486-2456

Myounghee Noh & Associates	Work Order: HRI0096	Received:	09/18/08
99-1046 Iwaena Street - Suite 210A		Reported:	10/03/08 09:04
Aiea, HI 96701	Project: Ewa Makai Middle Phase II		
Adam Custer	Project Number: Ewa Makai Middle Phase II, 20691		

LABORATORY BLANK QC DATA

Analyte	Source Result	Spike Level	Units	MDL	MRL	Result	Dup Result	% REC	Dup %REC	% REC Limits	RPD	RPD Limit	Q
Semivolatile Organics by GC/MS													
Batch\Seq: 8I25006 Extracted: 09/25/08													
Blank Analyzed: 09/26/2008 (8I25006-BLK1)													
Pentachloronitrobenzene			mg/kg	N/A	0.330	ND							
Pentachlorophenol			mg/kg	N/A	0.330	ND							
Phenacetin			mg/kg	N/A	0.330	ND							
Phenanthrene			mg/kg	N/A	0.330	ND							
Phenol			mg/kg	N/A	0.330	ND							
Pronamide			mg/kg	N/A	0.330	ND							
Pyrene			mg/kg	N/A	0.330	ND							
Pyridine			mg/kg	N/A	0.330	ND							
Surrogate: 2,4,6-Tribromophenol			mg/kg					*71*		*40-120*			
Surrogate: 2-Fluorobiphenyl			mg/kg					*77*		*45-120*			
Surrogate: 2-Fluorophenol			mg/kg					*70*		*30-120*			
Surrogate: Nitrobenzene-d5			mg/kg					*76*		*35-120*			
Surrogate: Phenol-d6			mg/kg					*70*		*40-120*			
Surrogate: Terphenyl-d14			mg/kg					*84*		*40-130*			
Total Metals by SW 846 Series Methods													
Batch\Seq: 8I29008 Extracted: 09/29/08													
Blank Analyzed: 09/29/2008 (8I29008-BLK1)													
Mercury			mg/kg	N/A	0.00500	ND							
Batch\Seq: 8I30006 Extracted: 09/30/08													
Blank Analyzed: 09/30/2008 (8I30006-BLK1)													
Arsenic			mg/kg	N/A	1.00	ND							
Barium			mg/kg	N/A	2.00	ND							
Cadmium			mg/kg	N/A	1.00	ND							
Chromium			mg/kg	N/A	1.00	ND							
Lead			mg/kg	N/A	2.00	ND							
Selenium			mg/kg	N/A	2.00	ND							
Silver			mg/kg	N/A	1.00	ND							
Volatile Organic Compounds by EPA 8260B													
Batch\Seq: 8I25011 Extracted: 09/24/08													
Blank Analyzed: 09/24/2008 (8I25011-BLK1)													
1,1,1,2-Tetrachloroethane			mg/kg	N/A	0.0100	ND							
1,1,1-Trichloroethane			mg/kg	N/A	0.0100	ND							
1,1,2,2-Tetrachloroethane			mg/kg	N/A	0.0100	ND							
1,1,2-Trichloroethane			mg/kg	N/A	0.0100	ND							
1,1-Dichloroethane			mg/kg	N/A	0.0500	ND							
1,1-Dichloroethene			mg/kg	N/A	0.0100	ND							
1,1-Dichloropropene			mg/kg	N/A	0.0100	ND							
1,2,3-Trichlorobenzene			mg/kg	N/A	0.0100	ND							
1,2,3-Trichloropropane			mg/kg	N/A	0.0100	ND							
1,2,4-Trichlorobenzene			mg/kg	N/A	0.0500	ND							
1,2,4-Trimethylbenzene			mg/kg	N/A	0.0100	ND							
1,2-Dibromo-3-chloropropane			mg/kg	N/A	0.0100	ND							
1,2-Dibromoethane (EDB)			mg/kg	N/A	0.0100	ND							

Myounghee Noh & Associates	Work Order: HRI0096	Received:	09/18/08
99-1046 Iwaena Street - Suite 210A		Reported:	10/03/08 09:04
Aiea, HI 96701	Project: Ewa Makai Middle Phase II		
Adam Custer	Project Number: Ewa Makai Middle Phase II, 20691		

LABORATORY BLANK QC DATA

Analyte	Source Result	Spike Level	Units	MDL	MRL	Result	Dup Result	% REC	Dup %REC	% REC Limits	RPD	RPD Limit	Q
Volatile Organic Compounds by EPA 8260B													
Batch\Seq: 8I25011 Extracted: 09/24/08													
Blank Analyzed: 09/24/2008 (8I25011-BLK1)													
1,2-Dichlorobenzene			mg/kg	N/A	0.0500	ND							
1,2-Dichloroethane			mg/kg	N/A	0.0100	ND							
1,2-Dichloropropane			mg/kg	N/A	0.0100	ND							
1,3,5-Trimethylbenzene			mg/kg	N/A	0.0100	ND							
1,3-Dichlorobenzene			mg/kg	N/A	0.0500	ND							
1,3-Dichloropropane			mg/kg	N/A	0.0100	ND							
1,4-Dichlorobenzene			mg/kg	N/A	0.0500	ND							
2,2-Dichloropropane			mg/kg	N/A	0.0100	ND							
2-Butanone (MEK)			mg/kg	N/A	0.0500	ND							
2-Chlorotoluene			mg/kg	N/A	0.0100	ND							
2-Hexanone			mg/kg	N/A	0.0500	ND							
4-Chlorotoluene			mg/kg	N/A	0.0100	ND							
4-Methyl-2-pentanone (MIBK)			mg/kg	N/A	0.0500	ND							
Acetone			mg/kg	N/A	0.0500	ND							
Acrylonitrile			mg/kg	N/A	0.0500	ND							
Benzene			mg/kg	N/A	0.0100	ND							
Bromobenzene			mg/kg	N/A	0.0100	ND							
Bromochloromethane			mg/kg	N/A	0.0500	ND							
Bromodichloromethane			mg/kg	N/A	0.0100	ND							
Bromoform			mg/kg	N/A	0.0100	ND							
Bromomethane			mg/kg	N/A	0.100	ND							
Carbon disulfide			mg/kg	N/A	0.0100	ND							
Carbon Tetrachloride			mg/kg	N/A	0.0100	ND							
Chlorobenzene			mg/kg	N/A	0.0100	ND							
Chlorodibromomethane			mg/kg	N/A	0.0100	ND							
Chloroethane			mg/kg	N/A	0.0500	ND							
Chloroform			mg/kg	N/A	0.0100	ND							
Chloromethane			mg/kg	N/A	0.0500	ND							
cis-1,2-Dichloroethene			mg/kg	N/A	0.0100	ND							
cis-1,3-Dichloropropene			mg/kg	N/A	0.0100	ND							
Dibromomethane			mg/kg	N/A	0.0100	ND							
Dichlorodifluoromethane			mg/kg	N/A	0.0500	ND							
Ethylbenzene			mg/kg	N/A	0.0100	ND							
Hexachlorobutadiene			mg/kg	N/A	0.0500	ND							
Iodomethane			mg/kg	N/A	0.0500	ND							
Isopropylbenzene			mg/kg	N/A	0.0100	ND							
m,p-Xylene			mg/kg	N/A	0.0100	ND							
Methyl tert-Butyl Ether			mg/kg	N/A	0.00500	ND							
Methylene Chloride			mg/kg	N/A	0.0500	ND							
Naphthalene			mg/kg	N/A	0.0500	ND							
n-Butylbenzene			mg/kg	N/A	0.0100	ND							
n-Propylbenzene			mg/kg	N/A	0.0100	ND							
o-Xylene			mg/kg	N/A	0.0100	ND							
p-Isopropyltoluene			mg/kg	N/A	0.0100	ND							
sec-Butylbenzene			mg/kg	N/A	0.0100	ND							

TestAmerica
THE LEADER IN ENVIRONMENTAL TESTING
99-193 Aiea Heights Drive, Suite 121 Aiea, HI 96701 * 808-486-5227 * Fax 808-486-2456

Myounghee Noh & Associates	Work Order: HRI0096	Received:	09/18/08
99-1046 Iwaena Street - Suite 210A		Reported:	10/03/08 09:04
Aiea, HI 96701	Project: Ewa Makai Middle Phase II		
Adam Custer	Project Number: Ewa Makai Middle Phase II, 20691		

LABORATORY BLANK QC DATA

Analyte	Source Result	Spike Level	Units	MDL	MRL	Result	Dup Result	% REC	Dup %REC	% REC Limits	RPD	RPD Limit	Q
Volatile Organic Compounds by EPA 8260B													
Batch\Seq: 8I25011 Extracted: 09/24/08													
Blank Analyzed: 09/24/2008 (8I25011-BLK1)													
Styrene			mg/kg	N/A	0.0100	ND							
tert-Butylbenzene			mg/kg	N/A	0.0100	ND							
Tetrachloroethene			mg/kg	N/A	0.0100	ND							
Toluene			mg/kg	N/A	0.0100	ND							
trans-1,2-Dichloroethene			mg/kg	N/A	0.0100	ND							
trans-1,3-Dichloropropene			mg/kg	N/A	0.0100	ND							
trans-1,4-Dichloro-2-butene			mg/kg	N/A	0.0500	ND							
Trichloroethene			mg/kg	N/A	0.0100	ND							
Trichlorofluoromethane			mg/kg	N/A	0.0100	ND							
Vinyl Acetate			mg/kg	N/A	0.0500	ND							
Vinyl chloride			mg/kg	N/A	0.0500	ND							
Surrogate: 1,2-Dichloroethane-d4			mg/kg					*93*		*80-120*			
Surrogate: 4-Bromofluorobenzene			mg/kg					*96*		*80-120*			
Surrogate: Dibromofluoromethane			mg/kg					*100*		*80-120*			
Surrogate: Toluene-d8			mg/kg					*97*		*80-120*			

Myounghee Noh & Associates
99-1046 Iwaena Street - Suite 210A
Aiea, HI 96701
Adam Custer

Work Order: HRI0096
Project: Ewa Makai Middle Phase II
Project Number: Ewa Makai Middle Phase II, 20691

Received: 09/18/08
Reported: 10/03/08 09:04

LABORATORY DUPLICATE QC DATA

Analyte	Source Result	Spike Level	Units	MDL	MRL	Result	% REC	Dup %REC	% REC Limits	RPD	RPD Limit	Q
Extractable Petroleum Hydrocarbons by 8015M												
Batch\Seq: 8123010 Extracted: 09/23/08												
Duplicate Analyzed: 10/01/2008 (8123010-DUP1)				QC Source Sample: HRI0096-01								
DRO	7.29		mg/kg	N/A	3.96	7.55				3	30	
Surrogate: o-Terphenyl			mg/kg				*115*		*35-120*			
Semivolatile Organics by GC/MS												
Batch\Seq: 8125006 Extracted: 09/25/08												
Duplicate Analyzed: 09/26/2008 (8125006-DUP1)				QC Source Sample: HRI0096-01								
1,2,4,5-Tetrachlorobenzene	ND		mg/kg	N/A	0.324	ND					30	
1,2,4-Trichlorobenzene	ND		mg/kg	N/A	0.324	ND					30	
1,2-Dichlorobenzene	ND		mg/kg	N/A	0.324	ND					30	
1,3-Dichlorobenzene	ND		mg/kg	N/A	0.324	ND					30	
1,4-Dichlorobenzene	ND		mg/kg	N/A	0.324	ND					30	
1-Chloronaphthalene	ND		mg/kg	N/A	0.324	ND					30	
1-Methylnaphthalene	ND		mg/kg	N/A	0.324	ND					30	
1-Naphthylamine	ND		mg/kg	N/A	0.647	ND					30	
2,3,4,6-Tetrachlorophenol	ND		mg/kg	N/A	0.324	ND					30	
2,4,5-Trichlorophenol	ND		mg/kg	N/A	0.324	ND					30	
2,4,6-Trichlorophenol	ND		mg/kg	N/A	0.324	ND					30	
2,4-Dichlorophenol	ND		mg/kg	N/A	0.324	ND					30	
2,4-Dimethylphenol	ND		mg/kg	N/A	0.324	ND					30	
2,4-Dinitrophenol	ND		mg/kg	N/A	1.67	ND					30	
2,4-Dinitrotoluene	ND		mg/kg	N/A	0.324	ND					30	
2,6-Dichlorophenol	ND		mg/kg	N/A	0.324	ND					30	
2,6-Dinitrotoluene	ND		mg/kg	N/A	0.324	ND					30	
2-Chloronaphthalene	ND		mg/kg	N/A	0.324	ND					30	
2-Chlorophenol	ND		mg/kg	N/A	0.324	ND					30	
2-Methylnaphthalene	ND		mg/kg	N/A	0.324	ND					30	
2-Methylphenol (o-Cresol)	ND		mg/kg	N/A	0.324	ND					30	
2-Naphthylamine	ND		mg/kg	N/A	0.647	ND					30	
2-Nitroaniline	ND		mg/kg	N/A	0.324	ND					30	
2-Nitrophenol	ND		mg/kg	N/A	0.324	ND					30	
2-Picoline	ND		mg/kg	N/A	0.324	ND					30	
3,3'-Dichlorobenzidine	ND		mg/kg	N/A	0.324	ND					30	
3,4-Methylphenol (m,p-Cresol)	ND		mg/kg	N/A	0.324	ND					30	
3-Methylcholanthrene	ND		mg/kg	N/A	0.324	ND					30	
3-Nitroaniline	ND		mg/kg	N/A	0.324	ND					30	
4,6-Dinitro-2-methylphenol	ND		mg/kg	N/A	0.324	ND					30	
4-Aminobiphenyl	ND		mg/kg	N/A	0.647	ND					30	
4-Bromophenyl phenyl ether	ND		mg/kg	N/A	0.324	ND					30	
4-Chloro-3-methylphenol	ND		mg/kg	N/A	0.324	ND					30	
4-Chloroaniline	ND		mg/kg	N/A	0.324	ND					30	
4-Chlorophenyl phenyl ether	ND		mg/kg	N/A	0.324	ND					30	
4-Nitroaniline	ND		mg/kg	N/A	0.324	ND					30	
4-Nitrophenol	0.233		mg/kg	N/A	0.324	ND					30	
7,12-Dimethylbenz (a) anthracene	ND		mg/kg	N/A	0.324	ND					30	
a,a-Dimethylphenethylamine	0.00232		mg/kg	N/A	0.324	0.00229				1	30	

Myounghee Noh & Associates
99-1046 Iwaena Street - Suite 210A
Aiea, HI 96701
Adam Custer

Work Order: HRI0096
Project: Ewa Makai Middle Phase II
Project Number: Ewa Makai Middle Phase II, 20691

Received: 09/18/08
Reported: 10/03/08 09:04

LABORATORY DUPLICATE QC DATA

Analyte	Source Result	Spike Level	Units	MDL	MRL	Result	% REC	Dup %REC	% REC Limits	RPD	RPD Limit	Q
Semivolatile Organics by GC/MS												
Batch\Seq: 8125006 Extracted: 09/25/08												
Duplicate Analyzed: 09/26/2008 (8125006-DUP1)				QC Source Sample: HRI0096-01								
Acenaphthene	ND		mg/kg	N/A	0.324	ND					30	
Acenaphthylene	ND		mg/kg	N/A	0.324	ND					30	
Acetophenone	ND		mg/kg	N/A	0.324	ND					30	
Aniline	ND		mg/kg	N/A	0.324	ND					30	
Anthracene	ND		mg/kg	N/A	0.324	ND					30	
Azobenzene	ND		mg/kg	N/A	0.324	ND					30	
Benzidine	ND		mg/kg	N/A	1.67	ND					30	
Benzo (a) anthracene	ND		mg/kg	N/A	0.324	ND					30	
Benzo (a) pyrene	ND		mg/kg	N/A	0.324	ND					30	
Benzo (b) fluoranthene	ND		mg/kg	N/A	0.324	ND					30	
Benzo (g,h,i) perylene	ND		mg/kg	N/A	0.324	ND					30	
Benzo (k) fluoranthene	ND		mg/kg	N/A	0.324	ND					30	
Benzoic acid	ND		mg/kg	N/A	0.324	ND					30	
Benzyl alcohol	ND		mg/kg	N/A	0.324	ND					30	
Bis(2-chloroethoxy)methane	ND		mg/kg	N/A	0.324	ND					30	
Bis(2-chloroethyl)ether	ND		mg/kg	N/A	0.324	ND					30	
Bis(2-chloroisopropyl) ether	ND		mg/kg	N/A	0.324	ND					30	
Bis(2-ethylhexyl)phthalate	ND		mg/kg	N/A	0.324	ND					30	
Butyl benzyl phthalate	ND		mg/kg	N/A	0.324	ND					30	
Chrysene	ND		mg/kg	N/A	0.324	ND					30	
Dibenz (a,j) acridine	ND		mg/kg	N/A	0.324	ND					30	
Dibenzo (a,h) anthracene	ND		mg/kg	N/A	0.324	ND					30	
Dibenzofuran	ND		mg/kg	N/A	0.324	ND					30	
Diethyl phthalate	ND		mg/kg	N/A	0.324	ND					30	
Dimethyl phthalate	ND		mg/kg	N/A	0.324	ND					30	
Dimethylaminoazobenzene	ND		mg/kg	N/A	0.324	ND					30	
Di-n-butyl phthalate	ND		mg/kg	N/A	0.324	ND					30	
Di-n-octyl phthalate	ND		mg/kg	N/A	0.324	ND					30	
Ethyl Methanesulfonate	ND		mg/kg	N/A	0.324	ND					30	
Fluoranthene	ND		mg/kg	N/A	0.324	ND					30	
Fluorene	ND		mg/kg	N/A	0.324	ND					30	
Hexachlorobenzene	ND		mg/kg	N/A	0.324	ND					30	
Hexachlorobutadiene	ND		mg/kg	N/A	0.324	ND					30	
Hexachlorocyclopentadiene	ND		mg/kg	N/A	0.324	ND					30	
Hexachloroethane	ND		mg/kg	N/A	0.324	ND					30	
Indeno (1,2,3-cd) pyrene	ND		mg/kg	N/A	0.324	ND					30	
Isophorone	ND		mg/kg	N/A	0.324	ND					30	
Methyl Methanesulfonate	ND		mg/kg	N/A	0.324	ND					30	
Naphthalene	ND		mg/kg	N/A	0.324	ND					30	
Nitrobenzene	ND		mg/kg	N/A	0.324	ND					30	
N-Nitrosodimethylamine	ND		mg/kg	N/A	0.324	ND					30	
N-Nitrosodi-n-butylamine	ND		mg/kg	N/A	0.324	ND					30	
N-Nitrosodi-n-propylamine	0.182		mg/kg	N/A	0.324	0.152				18	30	
N-Nitrosodiphenylamine	ND		mg/kg	N/A	0.324	ND					30	
N-Nitrosopiperidine	ND		mg/kg	N/A	0.324	ND					30	

Myounghee Noh & Associates	Work Order: HRI0096	Received:	09/18/08
99-1046 Iwaena Street - Suite 210A		Reported:	10/03/08 09:04
Aiea, HI 96701	Project: Ewa Makai Middle Phase II		
Adam Custer	Project Number: Ewa Makai Middle Phase II, 20691		

LABORATORY DUPLICATE QC DATA

Analyte	Source Result	Spike Level	Units	MDL	MRL	Result	% REC	Dup %REC	% REC Limits	RPD	RPD Limit	Q
Semivolatile Organics by GC/MS												
Batch\Seq: 8125006 Extracted: 09/25/08												
Duplicate Analyzed: 09/26/2008 (8125006-DUP1)				**QC Source Sample: HRI0096-01**								
Pentachloronitrobenzene	ND		mg/kg	N/A	0.324	ND					30	
Pentachlorophenol	ND		mg/kg	N/A	0.324	ND					30	
Phenacetin	ND		mg/kg	N/A	0.324	ND					30	
Phenanthrene	ND		mg/kg	N/A	0.324	ND					30	
Phenol	ND		mg/kg	N/A	0.324	ND					30	
Pronamide	ND		mg/kg	N/A	0.324	ND					30	
Pyrene	ND		mg/kg	N/A	0.324	ND					30	
Pyridine	ND		mg/kg	N/A	0.324	ND					30	
Surrogate: 2,4,6-Tribromophenol			mg/kg				*79*		*40-120*			
Surrogate: 2-Fluorobiphenyl			mg/kg				*75*		*45-120*			
Surrogate: 2-Fluorophenol			mg/kg				*63*		*30-120*			
Surrogate: Nitrobenzene-d5			mg/kg				*71*		*35-120*			
Surrogate: Phenol-d6			mg/kg				*67*		*40-120*			
Surrogate: Terphenyl-d14			mg/kg				*80*		*40-130*			

Myounghee Noh & Associates	Work Order: HRI0096	Received:	09/18/08
99-1046 Iwaena Street - Suite 210A		Reported:	10/03/08 09:04
Aiea, HI 96701	Project: Ewa Makai Middle Phase II		
Adam Custer	Project Number: Ewa Makai Middle Phase II, 20691		

LCS/LCS DUPLICATE QC DATA

Analyte	Source Result	Spike Level	Units	MDL	MRL	Result	Dup Result	% REC	Dup %REC	% REC Limits	RPD	RPD Limit	Q
Extractable Petroleum Hydrocarbons by 8015M													
Batch\Seq: 8123010 Extracted: 09/23/08													
LCS Analyzed: 09/29/2008 (8123010-BS1)													
DRO		167	mg/kg	N/A	4.00	137		82		50-115			
Surrogate: o-Terphenyl			mg/kg					*83*		*35-120*			
Semivolatile Organics by GC/MS													
Batch\Seq: 8125006 Extracted: 09/25/08													
LCS Analyzed: 09/26/2008 (8125006-BS1)													
1,2,4,5-Tetrachlorobenzene			mg/kg	N/A	0.330	ND				60-120			
1,2,4-Trichlorobenzene		1.67	mg/kg	N/A	0.330	1.39		83		45-120			
1,2-Dichlorobenzene		1.67	mg/kg	N/A	0.330	1.29		77		45-120			
1,3-Dichlorobenzene		1.67	mg/kg	N/A	0.330	1.21		73		45-120			
1,4-Dichlorobenzene		1.67	mg/kg	N/A	0.330	1.22		73		50-120			
1-Methylnaphthalene			mg/kg	N/A	0.330	ND				10-120			
1-Naphthylamine			mg/kg	N/A	0.660	ND				30-120			
2,3,4,6-Tetrachlorophenol			mg/kg	N/A	0.330	ND				60-120			
2,4,5-Trichlorophenol		1.67	mg/kg	N/A	0.330	1.57		94		50-120			
2,4,6-Trichlorophenol		1.67	mg/kg	N/A	0.330	1.45		87		55-120			
2,4-Dichlorophenol		1.67	mg/kg	N/A	0.330	1.42		85		50-120			
2,4-Dimethylphenol		1.67	mg/kg	N/A	0.330	1.36		82		40-120			
2,4-Dinitrophenol		1.67	mg/kg	N/A	1.70	1.47		88		40-120			
2,4-Dinitrotoluene		1.67	mg/kg	N/A	0.330	1.62		97		55-120			
2,6-Dichlorophenol			mg/kg	N/A	0.330	ND				55-120			
2,6-Dinitrotoluene		1.67	mg/kg	N/A	0.330	1.53		92		60-120			
2-Chloronaphthalene		1.67	mg/kg	N/A	0.330	1.30		78		45-120			
2-Chlorophenol		1.67	mg/kg	N/A	0.330	1.35		81		45-120			
2-Methylnaphthalene		1.67	mg/kg	N/A	0.330	1.42		85		50-120			
2-Methylphenol (o-Cresol)		1.67	mg/kg	N/A	0.330	1.52		91		50-120			
2-Naphthylamine			mg/kg	N/A	0.660	ND				30-120			
2-Nitroaniline		1.67	mg/kg	N/A	0.330	1.59		95		60-120			
2-Nitrophenol		1.67	mg/kg	N/A	0.330	1.39		83		50-120			
2-Picoline			mg/kg	N/A	0.330	ND				10-120			
3,3'-Dichlorobenzidine			mg/kg	N/A	0.330	ND				55-120			
3,4-Methylphenol (m,p-Cresol)		1.67	mg/kg	N/A	0.330	1.53		92		45-120			
3-Methylcholanthrene			mg/kg	N/A	0.330	ND				60-120			
3-Nitroaniline		1.67	mg/kg	N/A	0.330	1.29		78		50-120			
4,6-Dinitro-2-methylphenol		1.67	mg/kg	N/A	0.330	1.66		100		55-120			
4-Aminobiphenyl			mg/kg	N/A	0.660	ND				60-120			
4-Bromophenyl phenyl ether		1.67	mg/kg	N/A	0.330	1.44		86		60-120			
4-Chloro-3-methylphenol		1.67	mg/kg	N/A	0.330	1.53		92		55-120			
4-Chloroaniline		1.67	mg/kg	N/A	0.330	0.637		38		10-120			
4-Chlorophenyl phenyl ether		1.67	mg/kg	N/A	0.330	1.53		92		55-120			
4-Nitroaniline		1.67	mg/kg	N/A	0.330	1.60		96		60-120			
4-Nitrophenol		1.67	mg/kg	N/A	0.330	1.32		79		45-120			
7,12-Dimethylbenz (a) anthracene			mg/kg	N/A	0.330	ND				45-145			
a,a-Dimethylphenethylamine			mg/kg	N/A	0.330	0.0987				10-120			
Acenaphthene		1.67	mg/kg	N/A	0.330	1.54		92		60-120			

Myounghee Noh & Associates
99-1046 Iwaena Street - Suite 210A
Aiea, HI 96701
Adam Custer

Work Order: HRI0096
Project: Ewa Makai Middle Phase II
Project Number: Ewa Makai Middle Phase II, 20691

Received: 09/18/08
Reported: 10/03/08 09:04

LCS/LCS DUPLICATE QC DATA

Analyte	Source Result	Spike Level	Units	MDL	MRL	Result	Dup Result	% REC	Dup %REC	% REC Limits	RPD	RPD Limit	Q
Semivolatile Organics by GC/MS													
Batch\Seq: 8125006 Extracted: 09/25/08													
LCS Analyzed: 09/26/2008 (8125006-BS1)													
Acenaphthylene		1.67	mg/kg	N/A	0.330	1.33		80		50-120			
Acetophenone			mg/kg	N/A	0.330	ND				60-120			
Aniline			mg/kg	N/A	0.330	ND				30-120			
Anthracene		1.67	mg/kg	N/A	0.330	1.55		93		60-120			
Azobenzene		1.67	mg/kg	N/A	0.330	1.47		88		60-120			
Benzidine			mg/kg	N/A	1.70	ND				10-120			
Benzo (a) anthracene		1.67	mg/kg	N/A	0.330	1.57		94		65-120			
Benzo (a) pyrene		1.67	mg/kg	N/A	0.330	1.45		87		45-120			
Benzo (b) fluoranthene		1.67	mg/kg	N/A	0.330	1.62		97		45-140			
Benzo (g,h,i) perylene		1.67	mg/kg	N/A	0.330	1.52		91		55-140			
Benzo (k) fluoranthene		1.67	mg/kg	N/A	0.330	1.72		103		50-130			
Bis(2-chloroethoxy)methane		1.67	mg/kg	N/A	0.330	1.45		87		45-120			
Bis(2-chloroethyl)ether		1.67	mg/kg	N/A	0.330	1.46		87		45-120			
Bis(2-chloroisopropyl) ether		1.67	mg/kg	N/A	0.330	1.62		97		40-120			
Bis(2-ethylhexyl)phthalate		1.67	mg/kg	N/A	0.330	1.66		99		60-120			
Butyl benzyl phthalate		1.67	mg/kg	N/A	0.330	1.63		98		60-120			
Chrysene		1.67	mg/kg	N/A	0.330	1.64		98		65-120			
Dibenz (a,j) acridine			mg/kg	N/A	0.330	ND				10-150			
Dibenzo (a,h) anthracene		1.67	mg/kg	N/A	0.330	1.54		92		50-150			
Dibenzofuran		1.67	mg/kg	N/A	0.330	1.50		90		55-120			
Diethyl phthalate		1.67	mg/kg	N/A	0.330	1.67		100		60-120			
Dimethyl phthalate		1.67	mg/kg	N/A	0.330	1.53		92		55-120			
Dimethylaminoazobenzene			mg/kg	N/A	0.330	ND				60-120			
Di-n-butyl phthalate		1.67	mg/kg	N/A	0.330	1.64		98		60-120			
Di-n-octyl phthalate		1.67	mg/kg	N/A	0.330	1.59		96		60-120			
Ethyl Methanesulfonate			mg/kg	N/A	0.330	ND				60-120			
Fluoranthene		1.67	mg/kg	N/A	0.330	1.72		103		60-120			
Fluorene		1.67	mg/kg	N/A	0.330	1.59		95		60-120			
Hexachlorobenzene		1.67	mg/kg	N/A	0.330	1.50		90		60-120			
Hexachlorobutadiene		1.67	mg/kg	N/A	0.330	1.38		83		40-120			
Hexachlorocyclopentadiene		1.67	mg/kg	N/A	0.330	1.25		75		25-120			
Hexachloroethane		1.67	mg/kg	N/A	0.330	1.27		76		40-120			
Indeno (1,2,3-cd) pyrene		1.67	mg/kg	N/A	0.330	1.52		91		50-120			
Isophorone		1.67	mg/kg	N/A	0.330	1.38		83		50-120			
Methyl Methanesulfonate			mg/kg	N/A	0.330	ND				50-120			
Naphthalene		1.67	mg/kg	N/A	0.330	1.40		84		50-120			
Nitrobenzene		1.67	mg/kg	N/A	0.330	1.42		85		45-120			
N-Nitrosodimethylamine		1.67	mg/kg	N/A	0.330	1.30		78		35-120			
N-Nitrosodi-n-butylamine			mg/kg	N/A	0.330	ND				60-120			
N-Nitrosodi-n-propylamine		1.67	mg/kg	N/A	0.330	1.92		115		40-120			
N-Nitrosodiphenylamine			mg/kg	N/A	0.330	ND				60-120			
N-Nitrosopiperidine			mg/kg	N/A	0.330	ND				65-120			
Pentachloronitrobenzene			mg/kg	N/A	0.330	ND				65-120			
Pentachlorophenol		1.67	mg/kg	N/A	0.330	1.44		86		50-120			
Phenacetin			mg/kg	N/A	0.330	0.0857				65-120			

Myounghee Noh & Associates
99-1046 Iwaena Street - Suite 210A
Aiea, HI 96701
Adam Custer

Work Order: HRI0096
Project: Ewa Makai Middle Phase II
Project Number: Ewa Makai Middle Phase II, 20691

Received: 09/18/08
Reported: 10/03/08 09:04

LCS/LCS DUPLICATE QC DATA

Analyte	Source Result	Spike Level	Units	MDL	MRL	Result	Dup Result	% REC	Dup %REC	% REC Limits	RPD	RPD Limit	Q
Semivolatile Organics by GC/MS													
Batch\Seq: 8125006 Extracted: 09/25/08													
LCS Analyzed: 09/26/2008 (8125006-BS1)													
Phenanthrene		1.67	mg/kg	N/A	0.330	1.60		96		60-120			
Phenol		1.67	mg/kg	N/A	0.330	1.36		82		45-120			
Pronamide			mg/kg	N/A	0.330	ND				50-120			
Pyrene		1.67	mg/kg	N/A	0.330	1.61		96		60-120			
Pyridine			mg/kg	N/A	0.330	ND				10-120			
Surrogate: 2,4,6-Tribromophenol			mg/kg					*87*		*40-120*			
Surrogate: 2-Fluorobiphenyl			mg/kg					*84*		*45-120*			
Surrogate: 2-Fluorophenol			mg/kg					*75*		*30-120*			
Surrogate: Nitrobenzene-d5			mg/kg					*81*		*35-120*			
Surrogate: Phenol-d6			mg/kg					*82*		*40-120*			
Surrogate: Terphenyl-d14			mg/kg					*84*		*40-130*			
Total Metals by SW 846 Series Methods													
Batch\Seq: 8129008 Extracted: 09/29/08													
LCS Analyzed: 09/29/2008 (8129008-BS1)													
Mercury		0.524	mg/kg	N/A	0.0500	0.576		110		80-120			
Batch\Seq: 8130006 Extracted: 09/30/08													
LCS Analyzed: 09/30/2008 (8130006-BS1)													
Arsenic		100	mg/kg	N/A	10.0	114		114		80-120			
Barium		100	mg/kg	N/A	20.0	114		114		80-120			
Cadmium		100	mg/kg	N/A	10.0	114		114		80-120			
Chromium		100	mg/kg	N/A	10.0	107		107		80-120			
Lead		100	mg/kg	N/A	20.0	111		111		80-120			
Selenium		100	mg/kg	N/A	20.0	110		110		80-120			
Silver		10.0	mg/kg	N/A	10.0	10.3		103		80-120			
Volatile Organic Compounds by EPA 8260B													
Batch\Seq: 8125011 Extracted: 09/24/08													
LCS Analyzed: 09/24/2008 (8125011-BS1)													
1,1,1,2-Tetrachloroethane		0.0984	mg/kg	N/A	0.0100	0.0895		91		75-120			
1,1,1-Trichloroethane		0.100	mg/kg	N/A	0.0100	0.0915		92		75-120			
1,1,2,2-Tetrachloroethane		0.0984	mg/kg	N/A	0.0100	0.0850		86		70-120			
1,1,2-Trichloroethane		0.0986	mg/kg	N/A	0.0100	0.0855		87		75-120			
1,1-Dichloroethane		0.0996	mg/kg	N/A	0.0500	0.0979		98		80-120			
1,1-Dichloroethene		0.0990	mg/kg	N/A	0.0100	0.0777		78		75-120			
1,1-Dichloropropene		0.0990	mg/kg	N/A	0.0100	0.0909		92		75-120			
1,2,3-Trichlorobenzene		0.100	mg/kg	N/A	0.0100	0.0847		85		65-120			
1,2,3-Trichloropropane		0.0986	mg/kg	N/A	0.0100	0.0854		87		70-120			
1,2,4-Trichlorobenzene		0.0994	mg/kg	N/A	0.0500	0.0854		86		70-120			
1,2,4-Trimethylbenzene		0.100	mg/kg	N/A	0.0100	0.0866		87		75-120			
1,2-Dibromo-3-chloropropane		0.100	mg/kg	N/A	0.0100	0.0730		73		65-120			
1,2-Dibromoethane (EDB)		0.100	mg/kg	N/A	0.0100	0.0879		88		70-120			
1,2-Dichlorobenzene		0.0998	mg/kg	N/A	0.0500	0.0861		86		80-120			
1,2-Dichloroethane		0.100	mg/kg	N/A	0.0100	0.0852		85		75-120			
1,2-Dichloropropane		0.100	mg/kg	N/A	0.0100	0.0938		94		75-120			

Myounghee Noh & Associates
99-1046 Iwaena Street - Suite 210A
Aiea, HI 96701
Adam Custer

Work Order: HRI0096
Project: Ewa Makai Middle Phase II
Project Number: Ewa Makai Middle Phase II, 20691

Received: 09/18/08
Reported: 10/03/08 09:04

LCS/LCS DUPLICATE QC DATA

Analyte	Source Result	Spike Level	Units	MDL	MRL	Result	Dup Result	% REC	Dup %REC	% REC Limits	RPD	RPD Limit	Q
Volatile Organic Compounds by EPA 8260B													
Batch\Seq: 8I25011 Extracted: 09/24/08													
LCS Analyzed: 09/24/2008 (8I25011-BS1)													
1,3,5-Trimethylbenzene		0.0988	mg/kg	N/A	0.0100	0.0822		83		75-120			
1,3-Dichlorobenzene		0.0999	mg/kg	N/A	0.0500	0.0850		85		75-120			
1,3-Dichloropropane		0.0996	mg/kg	N/A	0.0100	0.0872		88		70-120			
1,4-Dichlorobenzene		0.100	mg/kg	N/A	0.0500	0.0825		83		75-120			
2,2-Dichloropropane		0.100	mg/kg	N/A	0.0100	0.0921		92		70-130			
2-Butanone (MEK)		0.500	mg/kg	N/A	0.0500	0.341		68		60-130			
2-Chlorotoluene		0.0989	mg/kg	N/A	0.0100	0.0847		86		75-120			
2-Hexanone		0.500	mg/kg	N/A	0.0500	0.425		85		65-120			
4-Chlorotoluene		0.0986	mg/kg	N/A	0.0100	0.0859		87		75-120			
4-Methyl-2-pentanone (MIBK)		0.497	mg/kg	N/A	0.0500	0.423		85		65-130			
Acetone		0.500	mg/kg	N/A	0.0500	0.349		70		45-130			
Acrylonitrile		0.490	mg/kg	N/A	0.0500	0.456		93		50-120			
Benzene		0.100	mg/kg	N/A	0.0100	0.0871		87		80-120			
Bromobenzene		0.0995	mg/kg	N/A	0.0100	0.0868		87		80-120			
Bromochloromethane		0.0990	mg/kg	N/A	0.0500	0.0925		93		75-120			
Bromodichloromethane		0.100	mg/kg	N/A	0.0100	0.0866		87		80-120			
Bromoform		0.0990	mg/kg	N/A	0.0100	0.0821		83		70-120			
Bromomethane		0.100	mg/kg	N/A	0.100	0.130		130		65-120			L
Carbon disulfide		0.100	mg/kg	N/A	0.0100	0.0843		84		45-130			
Carbon Tetrachloride		0.100	mg/kg	N/A	0.0100	0.0859		86		80-120			
Chlorobenzene		0.100	mg/kg	N/A	0.0100	0.0838		84		80-120			
Chlorodibromomethane		0.0980	mg/kg	N/A	0.0100	0.0855		87		75-120			
Chloroethane		0.100	mg/kg	N/A	0.0500	0.106		106		70-130			
Chloroform		0.0998	mg/kg	N/A	0.0100	0.0855		86		80-120			
Chloromethane		0.100	mg/kg	N/A	0.0500	0.101		101		35-140			
cis-1,2-Dichloroethene		0.100	mg/kg	N/A	0.0100	0.0926		93		80-120			
cis-1,3-Dichloropropene		0.105	mg/kg	N/A	0.0100	0.0882		84		70-120			
Dibromomethane		0.0986	mg/kg	N/A	0.0100	0.0868		88		75-120			
Dichlorodifluoromethane		0.100	mg/kg	N/A	0.0500	0.0772		77		35-140			
Ethylbenzene		0.100	mg/kg	N/A	0.0100	0.0880		88		75-120			
Hexachlorobutadiene		0.0981	mg/kg	N/A	0.0500	0.0817		83		60-120			
Isopropylbenzene		0.0994	mg/kg	N/A	0.0100	0.0861		87		75-120			
m,p-Xylene		0.200	mg/kg	N/A	0.0100	0.171		85		70-120			
Methyl tert-Butyl Ether		0.100	mg/kg	N/A	0.00500	0.0876		88		70-120			
Methylene Chloride		0.100	mg/kg	N/A	0.0500	0.0904		90		80-120			
Naphthalene		0.100	mg/kg	N/A	0.0500	0.0869		87		60-120			
n-Butylbenzene		0.0990	mg/kg	N/A	0.0100	0.0885		89		70-120			
n-Propylbenzene		0.100	mg/kg	N/A	0.0100	0.0854		85		75-120			
o-Xylene		0.0990	mg/kg	N/A	0.0100	0.0850		86		75-120			
p-Isopropyltoluene		0.0994	mg/kg	N/A	0.0100	0.0807		81		65-120			
sec-Butylbenzene		0.100	mg/kg	N/A	0.0100	0.0826		83		70-120			
Styrene		0.0998	mg/kg	N/A	0.0100	0.0964		97		75-120			
tert-Butylbenzene		0.0990	mg/kg	N/A	0.0100	0.0863		87		70-120			
Tetrachloroethene		0.100	mg/kg	N/A	0.0100	0.0804		80		60-120			
Toluene		0.100	mg/kg	N/A	0.0100	0.0858		86		75-120			

Myounghee Noh & Associates
99-1046 Iwaena Street - Suite 210A
Aiea, HI 96701
Adam Custer

Work Order: HRI0096
Project: Ewa Makai Middle Phase II
Project Number: Ewa Makai Middle Phase II, 20691

Received: 09/18/08
Reported: 10/03/08 09:04

LCS/LCS DUPLICATE QC DATA

Analyte	Source Result	Spike Level	Units	MDL	MRL	Result	Dup Result	% REC	Dup %REC	% REC Limits	RPD	RPD Limit	Q
Volatile Organic Compounds by EPA 8260B													
Batch\Seq: 8I25011 Extracted: 09/24/08													
LCS Analyzed: 09/24/2008 (8I25011-BS1)													
trans-1,2-Dichloroethene		0.100	mg/kg	N/A	0.0100	0.0950		95		80-120			
trans-1,3-Dichloropropene		0.0950	mg/kg	N/A	0.0100	0.0799		84		65-120			
trans-1,4-Dichloro-2-butene		0.100	mg/kg	N/A	0.0500	0.0805		81		55-120			
Trichloroethene		0.100	mg/kg	N/A	0.0100	0.0871		87		80-120			
Trichlorofluoromethane		0.100	mg/kg	N/A	0.0100	0.115		115		80-130			
Vinyl Acetate		0.100	mg/kg	N/A	0.0500	0.107		107		40-150			
Vinyl chloride		0.100	mg/kg	N/A	0.0500	0.106		106		50-140			
Surrogate: 1,2-Dichloroethane-d4			mg/kg					*98*		*80-120*			
Surrogate: 4-Bromofluorobenzene			mg/kg					*96*		*80-120*			
Surrogate: Dibromofluoromethane			mg/kg					*100*		*80-120*			
Surrogate: Toluene-d8			mg/kg					*95*		*80-120*			

Myounghee Noh & Associates	Work Order: HRI0096	Received:	09/18/08
99-1046 Iwaena Street - Suite 210A		Reported:	10/03/08 09:04
Aiea, HI 96701	Project: Ewa Makai Middle Phase II		
Adam Custer	Project Number: Ewa Makai Middle Phase II, 20691		

MATRIX SPIKE/MATRIX SPIKE DUPLICATE QC DATA

Analyte	Source Result	Spike Level	Units	MDL	MRL	Result	Dup Result	% REC	Dup %REC	% REC Limits	RPD	RPD Limit	Q
Extractable Petroleum Hydrocarbons by 8015M													
Batch\Seq: 8123010 Extracted: 09/23/08													
Matrix Spike Analyzed: 10/01/2008 (8123010-MS1)				QC Source Sample: HRI0096-01									
DRO	7.29	166	mg/kg	N/A	3.97	150		86		50-115			
Surrogate: o-Terphenyl			mg/kg					*87*		*35-120*			
Semivolatile Organics by GC/MS													
Batch\Seq: 8125006 Extracted: 09/25/08													
Matrix Spike Analyzed: 09/26/2008 (8125006-MS1)				QC Source Sample: HRI0111-06									
1,2,4,5-Tetrachlorobenzene	ND		mg/kg	N/A	0.330	ND				60-120			
1,2,4-Trichlorobenzene	ND	1.67	mg/kg	N/A	0.330	1.29		77		45-120			
1,2-Dichlorobenzene	ND	1.67	mg/kg	N/A	0.330	1.12		67		45-120			
1,3-Dichlorobenzene	ND	1.67	mg/kg	N/A	0.330	1.04		62		45-120			
1,4-Dichlorobenzene	ND	1.67	mg/kg	N/A	0.330	1.06		63		50-120			
1-Chloronaphthalene	ND		mg/kg	N/A	0.330	1.67				55-120			
1-Methylnaphthalene	ND		mg/kg	N/A	0.330	ND				10-120			
1-Naphthylamine	ND		mg/kg	N/A	0.660	ND				30-120			
2,3,4,6-Tetrachlorophenol	ND		mg/kg	N/A	0.330	ND				60-120			
2,4,5-Trichlorophenol	ND	1.67	mg/kg	N/A	0.330	1.55		93		50-120			
2,4,6-Trichlorophenol	ND	1.67	mg/kg	N/A	0.330	1.43		86		55-120			
2,4-Dichlorophenol	ND	1.67	mg/kg	N/A	0.330	1.41		84		50-120			
2,4-Dimethylphenol	ND	1.67	mg/kg	N/A	0.330	1.48		89		40-120			
2,4-Dinitrophenol	ND	1.67	mg/kg	N/A	1.70	1.41		85		40-120			
2,4-Dinitrotoluene	ND	1.67	mg/kg	N/A	0.330	1.60		96		55-120			
2,6-Dichlorophenol	ND		mg/kg	N/A	0.330	ND				55-120			
2,6-Dinitrotoluene	ND	1.67	mg/kg	N/A	0.330	1.52		91		60-120			
2-Chloronaphthalene	ND	1.67	mg/kg	N/A	0.330	1.25		75		45-120			
2-Chlorophenol	ND	1.67	mg/kg	N/A	0.330	1.33		80		45-120			
2-Methylnaphthalene	ND	1.67	mg/kg	N/A	0.330	1.33		80		50-120			
2-Methylphenol (o-Cresol)	ND	1.67	mg/kg	N/A	0.330	1.51		90		50-120			
2-Naphthylamine	ND		mg/kg	N/A	0.660	ND				30-120			
2-Nitroaniline	ND	1.67	mg/kg	N/A	0.330	1.56		94		60-120			
2-Nitrophenol	ND	1.67	mg/kg	N/A	0.330	1.38		83		50-120			
2-Picoline	ND		mg/kg	N/A	0.330	ND				10-120			
3,3'-Dichlorobenzidine	ND		mg/kg	N/A	0.330	ND				55-120			
3,4-Methylphenol (m,p-Cresol)	ND	1.67	mg/kg	N/A	0.330	1.50		90		45-120			
3-Methylcholanthrene	ND		mg/kg	N/A	0.330	ND				60-120			
3-Nitroaniline	ND	1.67	mg/kg	N/A	0.330	1.31		79		50-120			
4,6-Dinitro-2-methylphenol	ND	1.67	mg/kg	N/A	0.330	1.67		100		55-120			
4-Aminobiphenyl	ND		mg/kg	N/A	0.660	ND				60-120			
4-Bromophenyl phenyl ether	ND	1.67	mg/kg	N/A	0.330	1.22		73		60-120			
4-Chloro-3-methylphenol	ND	1.67	mg/kg	N/A	0.330	1.50		90		55-120			
4-Chloroaniline	ND	1.67	mg/kg	N/A	0.330	0.921		55		10-120			
4-Chlorophenyl phenyl ether	ND	1.67	mg/kg	N/A	0.330	1.48		89		55-120			
4-Nitroaniline	ND	1.67	mg/kg	N/A	0.330	1.55		93		60-120			
4-Nitrophenol	ND	1.67	mg/kg	N/A	0.330	1.46		88		45-120			
7,12-Dimethylbenz (a) anthracene	ND		mg/kg	N/A	0.330	ND				45-145			
a,a-Dimethylphenethylamine	0.00200		mg/kg	N/A	0.330	0.0913				10-120			

TestAmerica
THE LEADER IN ENVIRONMENTAL TESTING
99-193 Aiea Heights Drive, Suite 121 Aiea, HI 96701 * 808-486-5227 * Fax 808-486-2456

Myounghee Noh & Associates	Work Order: HRI0096	Received:	09/18/08
99-1046 Iwaena Street - Suite 210A		Reported:	10/03/08 09:04
Aiea, HI 96701	Project: Ewa Makai Middle Phase II		
Adam Custer	Project Number: Ewa Makai Middle Phase II, 20691		

MATRIX SPIKE/MATRIX SPIKE DUPLICATE QC DATA

Analyte	Source Result	Spike Level	Units	MDL	MRL	Result	Dup Result	% REC	Dup %REC	% REC Limits	RPD	RPD Limit	Q
Semivolatile Organics by GC/MS													
Batch\Seq: 8125006 Extracted: 09/25/08													
Matrix Spike Analyzed: 09/26/2008 (8125006-MS1)				QC Source Sample: HRI0111-06									
Acenaphthene	ND	1.67	mg/kg	N/A	0.330	1.49		90		60-120			
Acenaphthylene	ND	1.67	mg/kg	N/A	0.330	1.28		77		50-120			
Acetophenone	ND		mg/kg	N/A	0.330	ND				60-120			
Aniline	ND		mg/kg	N/A	0.330	ND				30-120			
Anthracene	ND	1.67	mg/kg	N/A	0.330	1.53		92		60-120			
Azobenzene	ND	1.67	mg/kg	N/A	0.330	1.44		86		60-120			
Benzidine	ND		mg/kg	N/A	1.70	ND				10-120			
Benzo (a) anthracene	ND	1.67	mg/kg	N/A	0.330	1.55		93		65-120			
Benzo (a) pyrene	ND	1.67	mg/kg	N/A	0.330	1.55		93		45-120			
Benzo (b) fluoranthene	ND	1.67	mg/kg	N/A	0.330	1.50		90		45-140			
Benzo (g,h,i) perylene	ND	1.67	mg/kg	N/A	0.330	1.58		95		55-140			
Benzo (k) fluoranthene	ND	1.67	mg/kg	N/A	0.330	1.63		98		50-130			
Bis(2-chloroethoxy)methane	ND	1.67	mg/kg	N/A	0.330	1.42		85		45-120			
Bis(2-chloroethyl)ether	ND	1.67	mg/kg	N/A	0.330	1.38		83		45-120			
Bis(2-chloroisopropyl) ether	ND	1.67	mg/kg	N/A	0.330	1.46		88		40-120			
Bis(2-ethylhexyl)phthalate	ND	1.67	mg/kg	N/A	0.330	1.64		98		60-120			
Butyl benzyl phthalate	ND	1.67	mg/kg	N/A	0.330	1.59		95		60-120			
Chrysene	ND	1.67	mg/kg	N/A	0.330	1.57		94		65-120			
Dibenz (a,j) acridine	ND		mg/kg	N/A	0.330	ND				10-150			
Dibenzo (a,h) anthracene	ND	1.67	mg/kg	N/A	0.330	1.56		94		50-150			
Dibenzofuran	ND	1.67	mg/kg	N/A	0.330	1.45		87		55-120			
Diethyl phthalate	ND	1.67	mg/kg	N/A	0.330	1.64		98		60-120			
Dimethyl phthalate	ND	1.67	mg/kg	N/A	0.330	1.51		90		55-120			
Dimethylaminoazobenzene	ND		mg/kg	N/A	0.330	ND				60-120			
Di-n-butyl phthalate	ND	1.67	mg/kg	N/A	0.330	1.62		97		60-120			
Di-n-octyl phthalate	ND	1.67	mg/kg	N/A	0.330	1.52		91		60-120			
Ethyl Methanesulfonate	ND		mg/kg	N/A	0.330	ND				60-120			
Fluoranthene	ND	1.67	mg/kg	N/A	0.330	1.67		100		60-120			
Fluorene	ND	1.67	mg/kg	N/A	0.330	1.56		93		60-120			
Hexachlorobenzene	ND	1.67	mg/kg	N/A	0.330	1.52		91		60-120			
Hexachlorobutadiene	ND	1.67	mg/kg	N/A	0.330	1.28		77		40-120			
Hexachlorocyclopentadiene	ND	1.67	mg/kg	N/A	0.330	1.12		67		25-120			
Hexachloroethane	ND	1.67	mg/kg	N/A	0.330	1.08		65		40-120			
Indeno (1,2,3-cd) pyrene	ND	1.67	mg/kg	N/A	0.330	1.54		93		50-120			
Isophorone	ND	1.67	mg/kg	N/A	0.330	1.34		81		50-120			
Methyl Methanesulfonate	ND		mg/kg	N/A	0.330	ND				50-120			
Naphthalene	ND	1.67	mg/kg	N/A	0.330	1.32		79		50-120			
Nitrobenzene	ND	1.67	mg/kg	N/A	0.330	1.36		82		45-120			
N-Nitrosodimethylamine	ND	1.67	mg/kg	N/A	0.330	1.35		81		35-120			
N-Nitrosodi-n-butylamine	ND		mg/kg	N/A	0.330	ND				60-120			
N-Nitrosodi-n-propylamine	0.151	1.67	mg/kg	N/A	0.330	1.80		99		40-120			
N-Nitrosodiphenylamine	ND		mg/kg	N/A	0.330	ND				60-120			
N-Nitrosopiperidine	ND		mg/kg	N/A	0.330	ND				65-120			
Pentachloronitrobenzene	ND		mg/kg	N/A	0.330	ND				65-120			
Pentachlorophenol	ND	1.67	mg/kg	N/A	0.330	1.46		88		50-120			

Myounghee Noh & Associates
99-1046 Iwaena Street - Suite 210A
Aiea, HI 96701
Adam Custer

Work Order: HRI0096
Project: Ewa Makai Middle Phase II
Project Number: Ewa Makai Middle Phase II, 20691

Received: 09/18/08
Reported: 10/03/08 09:04

MATRIX SPIKE/MATRIX SPIKE DUPLICATE QC DATA

Analyte	Source Result	Spike Level	Units	MDL	MRL	Result	Dup Result	% REC	Dup %REC	% REC Limits	RPD	RPD Limit	Q
Semivolatile Organics by GC/MS													
Batch\Seq: 8125006 Extracted: 09/25/08													
Matrix Spike Analyzed: 09/26/2008 (8125006-MS1)				**QC Source Sample: HRI0111-06**									
Phenacetin	ND		mg/kg	N/A	0.330	0.0833				65-120			
Phenanthrene	ND	1.67	mg/kg	N/A	0.330	1.59		95		60-120			
Phenol	ND	1.67	mg/kg	N/A	0.330	1.34		81		45-120			
Pronamide	ND		mg/kg	N/A	0.330	ND				50-120			
Pyrene	ND	1.67	mg/kg	N/A	0.330	1.56		94		60-120			
Pyridine	ND		mg/kg	N/A	0.330	ND				10-120			
Surrogate: 2,4,6-Tribromophenol			mg/kg					*91*		*40-120*			
Surrogate: 2-Fluorobiphenyl			mg/kg					*81*		*45-120*			
Surrogate: 2-Fluorophenol			mg/kg					*76*		*30-120*			
Surrogate: Nitrobenzene-d5			mg/kg					*80*		*35-120*			
Surrogate: Phenol-d6			mg/kg					*82*		*40-120*			
Surrogate: Terphenyl-d14			mg/kg					*82*		*40-130*			
Total Metals by SW 846 Series Methods													
Batch\Seq: 8129008 Extracted: 09/29/08													
Matrix Spike Analyzed: 09/29/2008 (8129008-MS1)				**QC Source Sample: HRI0096-01**									
Mercury	0.0825	0.504	mg/kg	N/A	0.0481	0.620	0.623	107	109	75-125	1	20	
Batch\Seq: 8130006 Extracted: 09/30/08													
Matrix Spike Analyzed: 09/30/2008 (8130006-MS1)				**QC Source Sample: HRI0093-01**									
Arsenic	2.50	95.2	mg/kg	N/A	9.52	93.7	116	96	115	80-120	21	20	R
Barium	74.9	95.2	mg/kg	N/A	19.0	174	212	105	139	80-120	20	20	M1
Cadmium	ND	95.2	mg/kg	N/A	9.52	90.0	111	95	112	80-120	21	20	R
Chromium	10.6	95.2	mg/kg	N/A	9.52	102	123	96	114	80-120	19	20	
Lead	9.93	95.2	mg/kg	N/A	19.0	99.2	121	94	112	80-120	20	20	
Selenium	ND	95.2	mg/kg	N/A	19.0	86.9	107	91	109	80-120	21	20	R
Silver	ND	9.52	mg/kg	N/A	9.52	7.62	9.92	80	100	80-120	26	20	R
Volatile Organic Compounds by EPA 8260B													
Batch\Seq: 8125011 Extracted: 09/24/08													
Matrix Spike Analyzed: 09/24/2008 (8125011-MS1)				**QC Source Sample: HRI0096-06**									
1,1,1,2-Tetrachloroethane	ND	11.3	mg/kg	N/A	1.15	9.19	11.2	81	98	75-120	19	25	
1,1,1-Trichloroethane	ND	11.5	mg/kg	N/A	1.15	9.12	11.4	79	99	75-120	22	25	
1,1,2,2-Tetrachloroethane	ND	11.3	mg/kg	N/A	1.15	9.10	11.1	80	98	70-120	20	25	
1,1,2-Trichloroethane	ND	11.4	mg/kg	N/A	1.15	9.13	11.1	80	98	75-120	20	25	
1,1-Dichloroethane	ND	11.5	mg/kg	N/A	5.76	9.88	11.6	86	101	80-120	16	25	
1,1-Dichloroethene	ND	11.4	mg/kg	N/A	1.15	8.02	9.61	70	84	75-120	18	25	M8
1,1-Dichloropropene	ND	11.4	mg/kg	N/A	1.15	9.12	10.9	80	95	75-120	18	25	
1,2,3-Trichlorobenzene	ND	11.5	mg/kg	N/A	1.15	8.56	11.3	74	98	65-120	28	25	R2
1,2,3-Trichloropropane	ND	11.4	mg/kg	N/A	1.15	9.14	11.4	80	101	70-120	22	25	
1,2,4-Trichlorobenzene	ND	11.5	mg/kg	N/A	5.76	8.55	11.0	75	96	70-120	25	25	
1,2,4-Trimethylbenzene	ND	11.5	mg/kg	N/A	1.15	8.95	11.5	78	100	75-120	25	25	
1,2-Dibromo-3-chloropropane	ND	11.5	mg/kg	N/A	1.15	7.66	9.87	66	86	65-120	25	25	
1,2-Dibromoethane (EDB)	ND	11.5	mg/kg	N/A	1.15	9.24	11.2	80	98	70-120	20	25	
1,2-Dichlorobenzene	ND	11.5	mg/kg	N/A	5.76	8.90	10.9	77	95	80-120	20	25	M8
1,2-Dichloroethane	ND	11.5	mg/kg	N/A	1.15	8.98	11.2	78	97	75-120	22	25	

TestAmerica
THE LEADER IN ENVIRONMENTAL TESTING
99-193 Aiea Heights Drive, Suite 121 Aiea, HI 96701 * 808-486-5227 * Fax 808-486-2456

Myounghee Noh & Associates
99-1046 Iwaena Street - Suite 210A
Aiea, HI 96701
Adam Custer

Work Order: HRI0096
Project: Ewa Makai Middle Phase II
Project Number: Ewa Makai Middle Phase II, 20691

Received: 09/18/08
Reported: 10/03/08 09:04

MATRIX SPIKE/MATRIX SPIKE DUPLICATE QC DATA

Analyte	Source Result	Spike Level	Units	MDL	MRL	Result	Dup Result	% REC	Dup %REC	% REC Limits	RPD	RPD Limit	Q
Volatile Organic Compounds by EPA 8260B													
Batch\Seq: 8125011 Extracted: 09/24/08													
Matrix Spike Analyzed: 09/24/2008 (8125011-MS1)				**QC Source Sample: HRI0096-06**									
1,2-Dichloropropane	ND	11.5	mg/kg	N/A	1.15	9.57	11.7	83	102	75-120	20	25	
1,3,5-Trimethylbenzene	ND	11.4	mg/kg	N/A	1.15	8.42	10.5	74	92	75-120	22	25	M8
1,3-Dichlorobenzene	ND	11.5	mg/kg	N/A	5.76	8.50	10.8	74	94	75-120	24	25	M8
1,3-Dichloropropane	ND	11.5	mg/kg	N/A	1.15	9.00	11.4	78	99	70-120	23	25	
1,4-Dichlorobenzene	ND	11.5	mg/kg	N/A	5.76	8.35	10.6	72	92	75-120	23	25	M8
2,2-Dichloropropane	ND	11.5	mg/kg	N/A	1.15	8.70	10.5	75	91	70-130	19	25	
2-Butanone (MEK)	ND	57.6	mg/kg	N/A	5.76	35.7	44.9	62	78	60-130	23	25	
2-Chlorotoluene	ND	11.4	mg/kg	N/A	1.15	8.60	10.4	75	91	75-120	19	25	
2-Hexanone	ND	57.6	mg/kg	N/A	5.76	48.1	58.9	84	102	65-120	20	25	
4-Chlorotoluene	ND	11.4	mg/kg	N/A	1.15	8.53	10.6	75	94	75-120	22	25	
4-Methyl-2-pentanone (MIBK)	ND	57.3	mg/kg	N/A	5.76	46.9	56.6	82	99	65-130	19	25	
Acetone	ND	57.6	mg/kg	N/A	5.76	40.1	52.5	70	91	45-130	27	25	R2
Acrylonitrile	ND	56.5	mg/kg	N/A	5.76	48.0	59.2	85	105	50-120	21	25	
Benzene	ND	11.5	mg/kg	N/A	1.15	9.00	11.4	78	99	80-120	23	25	M8
Bromobenzene	ND	11.5	mg/kg	N/A	1.15	9.28	11.5	81	100	80-120	21	25	
Bromochloromethane	ND	11.4	mg/kg	N/A	5.76	9.29	11.5	81	101	75-120	22	25	
Bromodichloromethane	ND	11.5	mg/kg	N/A	1.15	8.85	11.0	77	96	80-120	22	25	M8
Bromoform	ND	11.4	mg/kg	N/A	1.15	8.43	10.5	74	92	70-120	22	25	
Bromomethane	ND	11.5	mg/kg	N/A	11.5	13.0	13.7	113	119	65-120	5	25	
Carbon disulfide	ND	11.5	mg/kg	N/A	1.15	8.45	10.3	73	89	45-130	19	25	
Carbon Tetrachloride	ND	11.5	mg/kg	N/A	1.15	8.57	10.7	74	93	80-120	22	25	M8
Chlorobenzene	ND	11.5	mg/kg	N/A	1.15	8.71	10.8	76	93	80-120	21	25	M8
Chlorodibromomethane	ND	11.3	mg/kg	N/A	1.15	8.99	11.1	80	98	75-120	21	25	
Chloroethane	ND	11.5	mg/kg	N/A	5.76	11.2	12.0	97	105	70-130	8	25	
Chloroform	ND	11.5	mg/kg	N/A	1.15	8.64	10.6	75	92	80-120	21	25	M8
Chloromethane	ND	11.5	mg/kg	N/A	5.76	9.03	9.45	78	82	35-140	5	25	
cis-1,2-Dichloroethene	ND	11.5	mg/kg	N/A	1.15	9.25	11.5	80	100	80-120	22	25	
cis-1,3-Dichloropropene	ND	12.1	mg/kg	N/A	1.15	8.94	10.9	74	90	70-120	20	25	
Dibromomethane	ND	11.4	mg/kg	N/A	1.15	9.00	11.0	79	97	75-120	20	25	
Dichlorodifluoromethane	ND	11.5	mg/kg	N/A	5.76	6.81	7.11	59	62	35-140	4	25	
Ethylbenzene	ND	11.5	mg/kg	N/A	1.15	9.06	10.9	79	95	75-120	19	25	
Hexachlorobutadiene	ND	11.3	mg/kg	N/A	5.76	8.05	10.4	71	92	60-120	26	25	R2
Isopropylbenzene	ND	11.5	mg/kg	N/A	1.15	8.72	11.0	76	96	75-120	23	25	
m,p-Xylene	ND	23.0	mg/kg	N/A	1.15	18.4	21.7	80	94	70-120	16	25	
Methyl tert-Butyl Ether	ND	11.5	mg/kg	N/A	0.576	9.35	11.3	81	99	70-120	19	25	
Methylene Chloride	ND	11.5	mg/kg	N/A	5.76	9.26	11.3	80	99	80-120	20	25	
Naphthalene	ND	11.5	mg/kg	N/A	5.76	9.11	11.6	79	101	60-120	24	25	
n-Butylbenzene	ND	11.4	mg/kg	N/A	1.15	8.75	10.4	77	92	70-120	18	25	
n-Propylbenzene	ND	11.5	mg/kg	N/A	1.15	9.09	11.1	79	96	75-120	20	25	
o-Xylene	ND	11.4	mg/kg	N/A	1.15	8.73	10.9	77	96	75-120	22	25	
p-Isopropyltoluene	ND	11.5	mg/kg	N/A	1.15	8.20	10.4	72	91	65-120	24	25	
sec-Butylbenzene	ND	11.5	mg/kg	N/A	1.15	8.44	10.1	73	88	70-120	18	25	
Styrene	ND	11.5	mg/kg	N/A	1.15	9.66	11.6	84	101	75-120	18	25	
tert-Butylbenzene	ND	11.4	mg/kg	N/A	1.15	8.75	10.9	77	96	70-120	22	25	
Tetrachloroethene	ND	11.5	mg/kg	N/A	1.15	8.10	10.3	70	89	60-120	24	25	

Myounghee Noh & Associates	Work Order: HRI0096	Received:	09/18/08
99-1046 Iwaena Street - Suite 210A		Reported:	10/03/08 09:04
Aiea, HI 96701	Project: Ewa Makai Middle Phase II		
Adam Custer	Project Number: Ewa Makai Middle Phase II, 20691		

MATRIX SPIKE/MATRIX SPIKE DUPLICATE QC DATA

Analyte	Source Result	Spike Level	Units	MDL	MRL	Result	Dup Result	% REC	Dup %REC	% REC Limits	RPD	RPD Limit	Q
Volatile Organic Compounds by EPA 8260B													
Batch\Seq: 8I25011 Extracted: 09/24/08													
Matrix Spike Analyzed: 09/24/2008 (8I25011-MS1)				**QC Source Sample: HRI0096-06**									
Toluene	ND	11.5	mg/kg	N/A	1.15	8.71	10.7	76	93	75-120	20	25	
trans-1,2-Dichloroethene	ND	11.5	mg/kg	N/A	1.15	9.59	11.7	83	102	80-120	20	25	
trans-1,3-Dichloropropene	ND	10.9	mg/kg	N/A	1.15	8.47	10.2	77	93	65-120	19	25	
trans-1,4-Dichloro-2-butene	ND	11.5	mg/kg	N/A	5.76	8.26	10.7	72	93	55-120	26	25	R2
Trichloroethene	ND	11.5	mg/kg	N/A	1.15	9.21	11.2	80	97	80-120	19	25	
Trichlorofluoromethane	ND	11.5	mg/kg	N/A	1.15	9.98	10.3	87	89	80-130	3	25	
Vinyl Acetate	ND	11.5	mg/kg	N/A	5.76	10 7	12 9	93	112	40-150	18	25	
Vinyl chloride	ND	11.5	mg/kg	N/A	5.76	9.02	9.38	78	81	50-140	4	25	
Surrogate: 1,2-Dichloroethane-d4			mg/kg					*97*	*100*	*80-120*			
Surrogate: 4-Bromofluorobenzene			mg/kg					*97*	*95*	*80-120*			
Surrogate: Dibromofluoromethane			mg/kg					*100*	*99*	*80-120*			
Surrogate: Toluene-d8			mg/kg					*98*	*97*	*80-120*			

Myounghee Noh & Associates	Work Order: HRI0096	Received:	09/18/08
99-1046 Iwaena Street - Suite 210A		Reported:	10/03/08 09:04
Aiea, HI 96701	Project: Ewa Makai Middle Phase II		
Adam Custer	Project Number: Ewa Makai Middle Phase II, 20691		

CERTIFICATION SUMMARY

TestAmerica Honolulu

Method	Matrix	Nelac	Hawaii
SW6010B	Solid/Soil	X	
SW7471	Solid/Soil	X	
SW8015M	Solid/Soil	X	
SW8260B	Solid/Soil	X	
SW8270C	Solid/Soil	X	

Subcontracted Laboratories

STL - Seattle, WA

5755 8th Street East - Tacoma,, WA 98424

Analysis Performed: 8081A Pesticides
Samples: HRI0096-01, HRI0096-03, HRI0096-04, HRI0096-05, HRI0096-06

Analysis Performed: 8151 Herbicides
Samples: HRI0096-01, HRI0096-03, HRI0096-04, HRI0096-05, HRI0096-06

For information concerning certifications of this facility or another TestAmerica facility, please visit our website at www.TestAmericaInc.com

DATA QUALIFIERS AND DEFINITIONS

L	Laboratory Control Sample and/or Laboratory Control Sample Duplicate recovery was above the acceptance limits. Analyte not detected, data not impacted.
M1	The MS and/or MSD were outside the acceptance limits due to sample matrix interference. See Blank Spike (LCS).
M8	The MS and/or MSD were below the acceptance limits. See Blank Spike (LCS).
R	The RPD exceeded the method control limit due to sample matrix effects. The individual analyte QA/QC recoveries, however, were within acceptance limits.
R2	The RPD exceeded the acceptance limit.
RL3	Reporting limit raised due to high concentrations of non-target analytes.
ND	Not detected at the reporting limit (or method detection limit if shown)

ADDITIONAL COMMENTS

TestAmerica - Honolulu
99-193 Aiea Heights Drive Suite 121 • Aiea, HI 96701-3900
808-486-LABS (5227) • Fax 808-486-2456

TestAmerica
ANALYTICAL TESTING CORPORATION

Chain of Custody / Analysis Request Form

LABORATORY USE ONLY
LAB JOB NO. HRI0096
LOCATION
CONTAINERS

Report to: Adam Custer
Company name: Youngblice Noh & Associates
Address: 99-1046 Iwaena St Suite 2104
City: AIEA State: HI Zip: 96701
Phone: 808-484-9214 Fax: 808-484-4660
Sampler: AC, EK, AT
samples in shipment: 8
Project identification: EVA Makai Middle Phase II
Job name
Job number: 20691
P.O. number
Contact email address: adam@nyh-associates.com
Data results needed: TAT STD

Indicate analyses requested: 8015 DRO, 8260B VOC, 8260B SVOC, RCRA 8 Metals, 8151 Herbicides

Item no.	Client sample ID	Matrix	Date	Time	No. of containers	Laboratory ID no.
1	691 DU1-S0	Soil, 4°C	9/17/08	11:50 A	1	HRI0096-01
2	691 DU1-S0-V	Soil, 4°C	9/17/08	1:45 P	1	-02
3	691 DU1-S2.5-1	Soil, 4°C	9/17/08	5:30 P	2	-03
4	691 DU1-S2.5-2	Soil, 4°C	9/17/08	5:30 P	2	-04
5	691 DU1-S2.5-3	Soil, 4°C	9/17/08	5:30 P	2	-05
6	691 DU1-S5.5	Soil, 4°C	9/17/08	5:30 P	2	-06
7	LAST ENTRY					
8						
9						
10						

Released by (print / sign)	Date / time released	Delivery method	Received by (print / sign)	Company / Agency affiliation	Date / time received	Condition noted
Adam Custer	9/18/08 1:50	hand	M Kosh / [illegible]	TAmerica	9/18/08 13:50	Intact 4°C

Comments: MTS samples

Please check one: ☒ Disposal by lab ☐ Return to client ☐ Archive

Page 1 of 1

Distribution: White - TestAmerica Yellow - TestAmerica Pink - Client

QQC REV 062206

TestAmerica
THE LEADER IN ENVIRONMENTAL TESTING

ANALYTICAL REPORT

Job Number: 580-11367-1

Job Description: HRI0096

For:
TestAmerica Laboratories, Inc
99-193 Aiea Heights Drive
Suite 121
Aiea, HI 96701

Attention: Mike D. Solick

Terri L Torres
Project Manager II
terri.torres@testamericainc.com
09/30/2008

TestAmerica Tacoma is a part of TestAmerica Laboratories, Inc.

This report is issued solely for the use of the person or company to whom it is addressed. Any use, copying or disclosure other than by the intended recipient is unauthorized. If you have received this report in error, please notify the sender immediately at 253-922-2310 and destroy this report immediately.

This report shall not be reproduced except in full, without prior express written approval by the laboratory. The results relate only to the item(s) tested and the sample(s) as received by the laboratory.

The results included in this report have been reviewed for compliance with the laboratory QA/QC plan and meet all requirements of NELAC. All data have been found to be compliant with laboratory protocol, with the exception of any items noted in the case narrative.

TestAmerica Laboratories, Inc.
TestAmerica Tacoma 5755 8th Street East, Tacoma, WA 98424
Tel (253) 922-2310 Fax (253) 922-5047 www.testamericainc.com

Job Narrative
580-J11367-1

GC Semi VOA - Method(s) 8081A
The LCS for batch 580-36417 was inadvertently spiked with MDL spike rather than the Matrix Spike. All target analytes were recovered within acceptable QC limits, but due to the low (1ug/L) spike, may have "ND" as their result. All associated sample surrogates were within QC limits and no sample remained to re-extract; therefore the results were reported.

In the event that the RPD between the primary and secondary columns for a given analyte exceeds 40%. the greater of the two values is reported and flagged "p," unless interference is noted, in which case, the lesser value is reported and the result flagged "PI."

METHOD SUMMARY

Client: TestAmerica Laboratories, Inc — Job Number: 580-11367-1

Description	Lab Location	Method	Preparation Method
Matrix: Solid			
Herbicides (GC/MS)	TAL TAC	SW846 8151A	
Multi Incremental Sample Preparation	TAL TAC		EPA Increm, Prep
Extraction (Herbicides)	TAL TAC		SW846 8151A
Organochlorine Pesticides (GC)	TAL TAC	SW846 8081A	
Multi Incremental Sample Preparation	TAL TAC		EPA Increm, Prep
Ultrasonic Extraction	TAL TAC		SW846 3550B

Lab References:

TAL TAC = TestAmerica Tacoma

Method References:

EPA = US Environmental Protection Agency

SW846 = "Test Methods For Evaluating Solid Waste, Physical/Chemical Methods", Third Edition, November 1986 And Its Updates.

SAMPLE SUMMARY

Client: TestAmerica Laboratories, Inc

Job Number: 580-11367-1

Lab Sample ID	Client Sample ID	Client Matrix	Date/Time Sampled	Date/Time Received
580-11367-1	HRI0096-01	Solid	09/17/2008 1150	09/25/2008 1130
580-11367-2	HRI0096-03	Solid	09/17/2008 1730	09/25/2008 1130
580-11367-3	HRI0096-04	Solid	09/17/2008 1730	09/25/2008 1130
580-11367-4	HRI0096-05	Solid	09/17/2008 1730	09/25/2008 1130
580-11367-5	HRI0096-06	Solid	09/17/2008 1730	09/25/2008 1130

Analytical Data

Client: TestAmerica Laboratories, Inc

Job Number: 580-11367-1

Client Sample ID: **HRI0096-01**

Lab Sample ID: 580-11367-1
Client Matrix: Solid

Date Sampled: 09/17/2008 1150
Date Received: 09/25/2008 1130

8151A Herbicides (GC/MS)

Method: 8151A
Preparation: 8151A
Dilution: 1.0
Date Analyzed: 09/27/2008 2019
Date Prepared: 09/27/2008 1218

Analysis Batch: 580-36469
Prep Batch: 580-36439

Instrument ID: SEA008
Lab File ID: L29143.D
Initial Weight/Volume: 30.1589 g
Final Weight/Volume: 10 mL
Injection Volume: 1.0 uL

Analyte	DryWt Corrected: N	Result (ug/Kg)	Qualifier	RL
Dalapon		ND		8.3
4-Nitrophenol		ND		3.3
Dicamba		ND		3.3
Mecoprop		ND		3.3
MCPA		ND		3.3
Dichlorprop		ND		3.3
2,4-D		ND		3.3
Pentachlorophenol		ND		3.3
Silvex (2,4,5-TP)		ND		3.3
2,4,5-T		ND		3.3
Dinoseb		ND		8.3
2,4-DB		ND		3.3

Surrogate	%Rec	Acceptance Limits
2,4-Dichlorophenylacetic acid	61	51 - 129

Analytical Data

Client: TestAmerica Laboratories, Inc

Job Number: 580-11367-1

Client Sample ID: **HRI0096-03**

Lab Sample ID: 580-11367-2
Client Matrix: Solid

Date Sampled: 09/17/2008 1730
Date Received: 09/25/2008 1130

8151A Herbicides (GC/MS)

Method: 8151A
Preparation: 8151A
Dilution: 1.0
Date Analyzed: 09/27/2008 2044
Date Prepared: 09/27/2008 1218

Analysis Batch: 580-36469
Prep Batch: 580-36439

Instrument ID: SEA008
Lab File ID: L29144.D
Initial Weight/Volume: 30.4789 g
Final Weight/Volume: 10 mL
Injection Volume: 1.0 uL

Analyte	DryWt Corrected: N	Result (ug/Kg)	Qualifier	RL
Dalapon		ND		8.2
4-Nitrophenol		ND		3.3
Dicamba		ND		3.3
Mecoprop		ND		3.3
MCPA		ND		3.3
Dichlorprop		ND		3.3
2,4-D		ND		3.3
Pentachlorophenol		3.4		3.3
Silvex (2,4,5-TP)		ND		3.3
2,4,5-T		ND		3.3
Dinoseb		ND		8.2
2,4-DB		ND		3.3

Surrogate	%Rec	Acceptance Limits
2,4-Dichlorophenylacetic acid	71	51 - 129

Analytical Data

Client: TestAmerica Laboratories, Inc

Job Number: 580-11367-1

Client Sample ID: **HRI0096-04**

Lab Sample ID: 580-11367-3
Client Matrix: Solid

Date Sampled: 09/17/2008 1730
Date Received: 09/25/2008 1130

8151A Herbicides (GC/MS)

Method: 8151A
Preparation: 8151A
Dilution: 1.0
Date Analyzed: 09/27/2008 2108
Date Prepared: 09/27/2008 1218

Analysis Batch: 580-36469
Prep Batch: 580-36439

Instrument ID: SEA008
Lab File ID: L29145.D
Initial Weight/Volume: 30.5236 g
Final Weight/Volume: 10 mL
Injection Volume: 1.0 uL

Analyte	DryWt Corrected: N	Result (ug/Kg)	Qualifier	RL
Dalapon		ND		8.2
4-Nitrophenol		ND		3.3
Dicamba		ND		3.3
Mecoprop		ND		3.3
MCPA		ND		3.3
Dichlorprop		ND		3.3
2,4-D		ND		3.3
Pentachlorophenol		4.9		3.3
Silvex (2,4,5-TP)		ND		3.3
2,4,5-T		ND		3.3
Dinoseb		ND		8.2
2,4-DB		ND		3.3

Surrogate	%Rec	Acceptance Limits
2,4-Dichlorophenylacetic acid	68	51 - 129

Analytical Data

Client: TestAmerica Laboratories, Inc

Job Number: 580-11367-1

Client Sample ID: **HRI0096-05**

Lab Sample ID: 580-11367-4
Client Matrix: Solid

Date Sampled: 09/17/2008 1730
Date Received: 09/25/2008 1130

8151A Herbicides (GC/MS)

Method: 8151A
Preparation: 8151A
Dilution: 1.0
Date Analyzed: 09/27/2008 2132
Date Prepared: 09/27/2008 1218

Analysis Batch: 580-36469
Prep Batch: 580-36439

Instrument ID: SEA008
Lab File ID: L29146.D
Initial Weight/Volume: 30.2751 g
Final Weight/Volume: 10 mL
Injection Volume: 1.0 uL

Analyte	DryWt Corrected: N	Result (ug/Kg)	Qualifier	RL
Dalapon		ND		8.2
4-Nitrophenol		ND		3.3
Dicamba		ND		3.3
Mecoprop		ND		3.3
MCPA		ND		3.3
Dichlorprop		ND		3.3
2,4-D		ND		3.3
Pentachlorophenol		4.8		3.3
Silvex (2,4,5-TP)		ND		3.3
2,4,5-T		ND		3.3
Dinoseb		ND		8.2
2,4-DB		ND		3.3

Surrogate	%Rec	Acceptance Limits
2,4-Dichlorophenylacetic acid	59	51 - 129

Analytical Data

Client: TestAmerica Laboratories, Inc

Job Number: 580-11367-1

Client Sample ID: **HRI0096-06**

Lab Sample ID: 580-11367-5
Client Matrix: Solid

Date Sampled: 09/17/2008 1730
Date Received: 09/25/2008 1130

8151A Herbicides (GC/MS)

Method: 8151A
Preparation: 8151A
Dilution: 1.0
Date Analyzed: 09/27/2008 2156
Date Prepared: 09/27/2008 1218

Analysis Batch: 580-36469
Prep Batch: 580-36439

Instrument ID: SEA008
Lab File ID: L29147.D
Initial Weight/Volume: 30.1855 g
Final Weight/Volume: 10 mL
Injection Volume: 1.0 uL

Analyte	DryWt Corrected: N	Result (ug/Kg)	Qualifier	RL
Dalapon		ND		8.3
4-Nitrophenol		ND		3.3
Dicamba		ND		3.3
Mecoprop		ND		3.3
MCPA		ND		3.3
Dichlorprop		ND		3.3
2,4-D		ND		3.3
Pentachlorophenol		ND		3.3
Silvex (2,4,5-TP)		ND		3.3
2,4,5-T		ND		3.3
Dinoseb		ND		8.3
2,4-DB		ND		3.3

Surrogate	%Rec	Acceptance Limits
2,4-Dichlorophenylacetic acid	82	51 - 129

Analytical Data

Client: TestAmerica Laboratories, Inc

Job Number: 580-11367-1

Client Sample ID: HRI0096-01

Lab Sample ID: 580-11367-1
Client Matrix: Solid

Date Sampled: 09/17/2008 1150
Date Received: 09/25/2008 1130

8081A Organochlorine Pesticides (GC)

Method: 8081A
Preparation: 3550B
Dilution: 1.0
Date Analyzed: 09/29/2008 1206
Date Prepared: 09/26/2008 1124

Analysis Batch: 580-36468
Prep Batch: 580-36417

Instrument ID: SEA035
Lab File ID: ECD35475.D
Initial Weight/Volume: 30.4098 g
Final Weight/Volume: 10 mL
Injection Volume: 1.0 uL
Column ID: PRIMARY

Analyte	DryWt Corrected: N	Result (ug/Kg)	Qualifier	RL
Aldrin		ND		0.33
alpha-BHC		ND		0.33
beta-BHC		ND		0.33
delta-BHC		ND		0.33
gamma-BHC (Lindane)		ND		0.33
4,4'-DDD		ND		0.66
4,4'-DDE		2.4		0.66
4,4'-DDT		ND		0.66
Dieldrin		ND		0.66
Endosulfan I		ND		0.33
Endosulfan II		ND		0.66
Endosulfan sulfate		ND		0.66
Endrin		ND		0.66
Endrin aldehyde		ND		0.66
Heptachlor		ND		0.33
Heptachlor epoxide		1.0		0.33
Methoxychlor		ND		3.3
Endrin ketone		ND		0.66
Toxaphene		ND		33
alpha-Chlordane		0.38	I P	0.33
gamma-Chlordane		1.3		0.33

Surrogate	%Rec	Acceptance Limits
Tetrachloro-m-xylene	75	49 - 123
DCB Decachlorobiphenyl	78	40 - 158

Analytical Data

Client: TestAmerica Laboratories, Inc

Job Number: 580-11367-1

Client Sample ID: HRI0096-03

Lab Sample ID: 580-11367-2
Client Matrix: Solid

Date Sampled: 09/17/2008 1730
Date Received: 09/25/2008 1130

8081A Organochlorine Pesticides (GC)

Method: 8081A
Preparation: 3550B
Dilution: 1.0
Date Analyzed: 09/29/2008 1253
Date Prepared: 09/26/2008 1124

Analysis Batch: 580-36468
Prep Batch: 580-36417

Instrument ID: SEA035
Lab File ID: ECD35476.D
Initial Weight/Volume: 30.1996 g
Final Weight/Volume: 10 mL
Injection Volume: 1.0 uL
Column ID: PRIMARY

Analyte	DryWt Corrected: N	Result (ug/Kg)	Qualifier	RL
Aldrin		ND		0.33
alpha-BHC		ND		0.33
beta-BHC		ND		0.33
delta-BHC		ND		0.33
gamma-BHC (Lindane)		ND		0.33
4,4'-DDD		ND		0.66
4,4'-DDE		ND		0.66
4,4'-DDT		ND		0.66
Dieldrin		ND		0.66
Endosulfan I		ND		0.33
Endosulfan II		ND		0.66
Endosulfan sulfate		ND		0.66
Endrin		ND		0.66
Endrin aldehyde		ND		0.66
Heptachlor		ND		0.33
Heptachlor epoxide		0.46		0.33
Methoxychlor		ND		3.3
Endrin ketone		ND		0.66
Toxaphene		ND		33
alpha-Chlordane		ND		0.33
gamma-Chlordane		0.54		0.33

Surrogate	%Rec	Acceptance Limits
Tetrachloro-m-xylene	78	49 - 123
DCB Decachlorobiphenyl	94	40 - 158

Analytical Data

Client: TestAmerica Laboratories, Inc

Job Number: 580-11367-1

Client Sample ID: HRI0096-04

Lab Sample ID: 580-11367-3
Client Matrix: Solid

Date Sampled: 09/17/2008 1730
Date Received: 09/25/2008 1130

8081A Organochlorine Pesticides (GC)

Method: 8081A
Preparation: 3550B
Dilution: 1.0
Date Analyzed: 09/29/2008 1312
Date Prepared: 09/26/2008 1124

Analysis Batch: 580-36468
Prep Batch: 580-36417

Instrument ID: SEA035
Lab File ID: ECD35477.D
Initial Weight/Volume: 30.3552 g
Final Weight/Volume: 10 mL
Injection Volume: 1.0 uL
Column ID: PRIMARY

Analyte	DryWt Corrected: N	Result (ug/Kg)	Qualifier	RL
Aldrin		ND		0.33
alpha-BHC		ND		0.33
beta-BHC		ND		0.33
delta-BHC		ND		0.33
gamma-BHC (Lindane)		ND		0.33
4,4'-DDD		ND		0.66
4,4'-DDE		ND		0.66
4,4'-DDT		ND		0.66
Dieldrin		ND		0.66
Endosulfan I		ND		0.33
Endosulfan II		ND		0.66
Endosulfan sulfate		ND		0.66
Endrin		ND		0.66
Endrin aldehyde		ND		0.66
Heptachlor		ND		0.33
Heptachlor epoxide		0.54		0.33
Methoxychlor		ND		3.3
Endrin ketone		ND		0.66
Toxaphene		ND		33
alpha-Chlordane		ND		0.33
gamma-Chlordane		0.53		0.33

Surrogate	%Rec	Acceptance Limits
Tetrachloro-m-xylene	101	49 - 123
DCB Decachlorobiphenyl	118	40 - 158

Analytical Data

Client: TestAmerica Laboratories, Inc

Job Number: 580-11367-1

Client Sample ID: HRI0096-05

Lab Sample ID: 580-11367-4
Client Matrix: Solid

Date Sampled: 09/17/2008 1730
Date Received: 09/25/2008 1130

8081A Organochlorine Pesticides (GC)

Method: 8081A
Preparation: 3550B
Dilution: 1.0
Date Analyzed: 09/29/2008 1332
Date Prepared: 09/26/2008 1124

Analysis Batch: 580-36468
Prep Batch: 580-36417

Instrument ID: SEA035
Lab File ID: ECD35478.D
Initial Weight/Volume: 30.4082 g
Final Weight/Volume: 10 mL
Injection Volume: 1.0 uL
Column ID: PRIMARY

Analyte	DryWt Corrected: N	Result (ug/Kg)	Qualifier	RL
Aldrin		ND		0.33
alpha-BHC		ND		0.33
beta-BHC		ND		0.33
delta-BHC		ND		0.33
gamma-BHC (Lindane)		ND		0.33
4,4'-DDD		ND		0.66
4,4'-DDE		ND		0.66
4,4'-DDT		ND		0.66
Dieldrin		ND		0.66
Endosulfan I		ND		0.33
Endosulfan II		ND		0.66
Endosulfan sulfate		ND		0.66
Endrin		ND		0.66
Endrin aldehyde		ND		0.66
Heptachlor		ND		0.33
Heptachlor epoxide		0.42		0.33
Methoxychlor		ND		3.3
Endrin ketone		ND		0.66
Toxaphene		ND		33
alpha-Chlordane		ND		0.33
gamma-Chlordane		0.54		0.33

Surrogate	%Rec	Acceptance Limits
Tetrachloro-m-xylene	74	49 - 123
DCB Decachlorobiphenyl	98	40 - 158

Analytical Data

Client: TestAmerica Laboratories, Inc

Job Number: 580-11367-1

Client Sample ID: HRI0096-06

Lab Sample ID: 580-11367-5
Client Matrix: Solid

Date Sampled: 09/17/2008 1730
Date Received: 09/25/2008 1130

8081A Organochlorine Pesticides (GC)

Method: 8081A
Preparation: 3550B
Dilution: 1.0
Date Analyzed: 09/29/2008 1351
Date Prepared: 09/26/2008 1124

Analysis Batch: 580-36468
Prep Batch: 580-36417

Instrument ID: SEA035
Lab File ID: ECD35479.D
Initial Weight/Volume: 30.5039 g
Final Weight/Volume: 10 mL
Injection Volume: 1.0 uL
Column ID: PRIMARY

Analyte	DryWt Corrected: N	Result (ug/Kg)	Qualifier	RL
Aldrin		ND		0.33
alpha-BHC		ND		0.33
beta-BHC		ND		0.33
delta-BHC		ND		0.33
gamma-BHC (Lindane)		ND		0.33
4,4'-DDD		ND		0.66
4,4'-DDE		ND		0.66
4,4'-DDT		ND		0.66
Dieldrin		ND		0.66
Endosulfan I		ND		0.33
Endosulfan II		ND		0.66
Endosulfan sulfate		ND		0.66
Endrin		ND		0.66
Endrin aldehyde		ND		0.66
Heptachlor		ND		0.33
Heptachlor epoxide		ND		0.33
Methoxychlor		ND		3.3
Endrin ketone		ND		0.66
Toxaphene		ND		33
alpha-Chlordane		ND		0.33
gamma-Chlordane		0.63		0.33

Surrogate	%Rec	Acceptance Limits
Tetrachloro-m-xylene	85	49 - 123
DCB Decachlorobiphenyl	75	40 - 158

Quality Control Results

Client: TestAmerica Laboratories, Inc

Job Number: 580-11367-1

Method Blank - Batch: 580-36439

Method: 8151A
Preparation: 8151A

Lab Sample ID: MB 580-36439/1-A
Client Matrix: Solid
Dilution: 1.0
Date Analyzed: 09/27/2008 1841
Date Prepared: 09/27/2008 1218

Analysis Batch: 580-36469
Prep Batch: 580-36439
Units: ug/Kg

Instrument ID: SEA008
Lab File ID: L29139.D
Initial Weight/Volume: 30.0000 g
Final Weight/Volume: 10 mL
Injection Volume: 1.0 uL

Analyte	Result	Qual	RL
Dalapon	ND		8.3
4-Nitrophenol	ND		3.3
Dicamba	ND		3.3
Mecoprop	ND		3.3
MCPA	ND		3.3
Dichlorprop	ND		3.3
2,4-D	ND		3.3
Pentachlorophenol	ND		3.3
Silvex (2,4,5-TP)	ND		3.3
2,4,5-T	ND		3.3
Dinoseb	ND		8.3
2,4-DB	ND		3.3

Surrogate	% Rec	Acceptance Limits
2,4-Dichlorophenylacetic acid	82	51 - 129

Calculations are performed before rounding to avoid round-off errors in calculated results.

Quality Control Results

Client: TestAmerica Laboratories, Inc

Job Number: 580-11367-1

Lab Control Spike - Batch: 580-36439

Method: 8151A
Preparation: 8151A

Lab Sample ID: LCS 580-36439/2-A
Client Matrix: Solid
Dilution: 1.0
Date Analyzed: 09/27/2008 1906
Date Prepared: 09/27/2008 1218

Analysis Batch: 580-36469
Prep Batch: 580-36439
Units: ug/Kg

Instrument ID: SEA008
Lab File ID: L29140.D
Initial Weight/Volume: 30.0000 g
Final Weight/Volume: 10 mL
Injection Volume: 1.0 uL

Analyte	Spike Amount	Result	% Rec.	Limit	Qual
Dalapon	333	222	67	16 - 74	
Dicamba	333	314	94	48 - 123	
Mecoprop	333	352	106	53 - 154	
MCPA	333	355	106	50 - 150	
Dichlorprop	333	384	115	75 - 140	
2,4-D	333	346	104	46 - 136	
Pentachlorophenol	333	329	99	50 - 150	
Silvex (2,4,5-TP)	333	325	97	52 - 137	
Dinoseb	333	387	116	18 - 157	
2,4-DB	333	328	98	50 - 155	

Surrogate	% Rec	Acceptance Limits
2,4-Dichlorophenylacetic acid	107	51 - 129

Calculations are performed before rounding to avoid round-off errors in calculated results.

Quality Control Results

Client: TestAmerica Laboratories, Inc

Job Number: 580-11367-1

Matrix Spike/
Matrix Spike Duplicate Recovery Report - Batch: 580-36439

Method: 8151A
Preparation: 8151A

MS Lab Sample ID: 580-11367-1
Client Matrix: Solid
Dilution: 1.0
Date Analyzed: 09/27/2008 1930
Date Prepared: 09/27/2008 1218

Analysis Batch: 580-36469
Prep Batch: 580-36439

Instrument ID: SEA008
Lab File ID: L29141.D
Initial Weight/Volume: 30.4981 g
Final Weight/Volume: 10 mL
Injection Volume: 1.0 uL

MSD Lab Sample ID: 580-11367-1
Client Matrix: Solid
Dilution: 1.0
Date Analyzed: 09/27/2008 1955
Date Prepared: 09/27/2008 1218

Analysis Batch: 580-36469
Prep Batch: 580-36439

Instrument ID: SEA008
Lab File ID: L29142.D
Initial Weight/Volume: 30.3866 g
Final Weight/Volume: 10 mL
Injection Volume: 1.0 uL

Analyte	% Rec. MS	% Rec. MSD	Limit	RPD	RPD Limit	MS Qual	MSD Qual
Dalapon	52	48	16 - 74	9	30		
Dicamba	84	83	48 - 123	0	30		
Mecoprop	88	105	53 - 154	18	30		
MCPA	89	93	50 - 150	4	30		
Dichlorprop	92	102	75 - 140	10	30		
2,4-D	78	89	46 - 136	13	30		
Pentachlorophenol	89	98	50 - 150	10	30		
Silvex (2,4,5-TP)	85	88	52 - 137	4	30		
Dinoseb	110	115	18 - 157	5	30		
2,4-DB	99	106	50 - 155	7	30		

Surrogate	MS % Rec	MSD % Rec	Acceptance Limits
2,4-Dichlorophenylacetic acid	75	85	51 - 129

Calculations are performed before rounding to avoid round-off errors in calculated results.

Quality Control Results

Client: TestAmerica Laboratories, Inc

Job Number: 580-11367-1

Method Blank - Batch: 580-36417

Method: 8081A
Preparation: 3550B

Lab Sample ID: MB 580-36417/1-A
Client Matrix: Solid
Dilution: 1.0
Date Analyzed: 09/29/2008 1126
Date Prepared: 09/26/2008 1124

Analysis Batch: 580-36468
Prep Batch: 580-36417
Units: ug/Kg

Instrument ID: SEA035
Lab File ID: ECD35473.D
Initial Weight/Volume: 10 g
Final Weight/Volume: 10 mL
Injection Volume: 1.0 uL
Column ID: PRIMARY

Analyte	Result	Qual	RL
Aldrin	ND		1.0
alpha-BHC	ND		1.0
beta-BHC	ND		1.0
delta-BHC	ND		1.0
gamma-BHC (Lindane)	ND		1.0
4,4'-DDD	ND		2.0
4,4'-DDE	ND		2.0
4,4'-DDT	ND		2.0
Dieldrin	ND		2.0
Endosulfan I	ND		1.0
Endosulfan II	ND		2.0
Endosulfan sulfate	ND		2.0
Endrin	ND		2.0
Endrin aldehyde	ND		2.0
Heptachlor	ND		1.0
Heptachlor epoxide	ND		1.0
Methoxychlor	ND		10
Endrin ketone	ND		2.0
Toxaphene	ND		100
alpha-Chlordane	ND		1.0
gamma-Chlordane	ND		1.0

Surrogate	% Rec	Acceptance Limits
Tetrachloro-m-xylene	85	49 - 123
DCB Decachlorobiphenyl	69	40 - 158

Calculations are performed before rounding to avoid round-off errors in calculated results.

Quality Control Results

Client: TestAmerica Laboratories, Inc

Job Number: 580-11367-1

Lab Control Spike - Batch: 580-36417

Method: 8081A
Preparation: 3550B

Lab Sample ID: LCS 580-36417/2-A
Client Matrix: Solid
Dilution: 1.0
Date Analyzed: 09/29/2008 1146
Date Prepared: 09/26/2008 1124

Analysis Batch: 580-36468
Prep Batch: 580-36417
Units: ug/Kg

Instrument ID: SEA035
Lab File ID: ECD35474.D
Initial Weight/Volume: 10 g
Final Weight/Volume: 10 mL
Injection Volume: 1.0 uL
Column ID: PRIMARY

Analyte	Spike Amount	Result	% Rec.	Limit	Qual
Aldrin	1.00	ND	98	53 - 126	
alpha-BHC	1.00	ND	99	41 - 128	
beta-BHC	1.00	ND	98	48 - 121	
delta-BHC	1.00	ND	73	22 - 153	
gamma-BHC (Lindane)	1.00	ND	99	50 - 127	
4,4'-DDD	1.00	ND	103	44 - 141	
4,4'-DDE	1.00	ND	86	47 - 140	
4,4'-DDT	1.00	ND	91	34 - 159	
Dieldrin	1.00	ND	96	53 - 134	
Endosulfan I	1.00	1.05	105	52 - 122	
Endosulfan II	1.00	ND	95	53 - 132	
Endosulfan sulfate	1.00	ND	93	42 - 128	
Endrin	1.00	ND	100	46 - 138	
Endrin aldehyde	1.00	ND	102	12 - 179	
Heptachlor	1.00	1.09	109	50 - 130	
Heptachlor epoxide	1.00	1.08	108	49 - 123	
Methoxychlor	1.00	ND	103	46 - 154	
Endrin ketone	1.00	ND	92	45 - 127	
alpha-Chlordane	1.00	1.02	102	46 - 118	
gamma-Chlordane	1.00	1.15	115	49 - 122	

Surrogate	% Rec	Acceptance Limits
Tetrachloro-m-xylene	91	49 - 123
DCB Decachlorobiphenyl	73	40 - 158

Calculations are performed before rounding to avoid round-off errors in calculated results.

DATA REPORTING QUALIFIERS

Client: TestAmerica Laboratories, Inc

Job Number: 580-11367-1

Lab Section	Qualifier	Description
GC Semi VOA		
	I	Indicates the presence of an interference, recovery is not calculated.
	P	The lower of the two values is reported when the % difference between the results of two GC columns is greater than 40%

cardboard box 14.0°C

SUBCONTRACT ORDER

TestAmerica Honolulu

HRI0096

11367

SENDING LABORATORY:

TestAmerica Honolulu
99-193 Aiea Heights Drive, Suite 121
Aiea, HI 96701
Phone: 808-486-5227
Fax: 808-486-2456
Project Manager: Mike D. Solick
Client: Myounghee Noh & Associates

RECEIVING LABORATORY:

TestAmerica Tacoma
5755 8th Street East
Tacoma,, WA 98424
Phone :(253) 922-2310
Fax: 253
Project Location: Hawaii
Receipt Temperature: _____°C Ice: Y / N

Analysis	Units	Due	Expires	Interlab Price	Surch	Comments
Sample ID: HRI0096-01	**Solid/Soil**		Sampled: 09/17/08 11:50			
8081A Pesticides	mg/kg	10/02/08	10/01/08 11:50	$135.00	0%	
8151 Herbicides	mg/kg	10/02/08	09/24/08 11:50	$195.00	0%	
Containers Supplied: Incremental Sub-sample (analyze entire content) (C)						
Sample ID: HRI0096-03	**Solid/Soil**		Sampled: 09/17/08 17:30			
8081A Pesticides	mg/kg	10/02/08	10/01/08 17:30	$135.00	0%	
8151 Herbicides	mg/kg	10/02/08	09/24/08 17:30	$195.00	0%	
Containers Supplied: Incremental Sub-sample (analyze entire content) (D)						
Sample ID: HRI0096-04	**Solid/Soil**		Sampled: 09/17/08 17:30			
8081A Pesticides	mg/kg	10/02/08	10/01/08 17:30	$135.00	0%	
8151 Herbicides	mg/kg	10/02/08	09/24/08 17:30	$195.00	0%	
Containers Supplied: Incremental Sub-sample (analyze entire content) (D)						
Sample ID: HRI0096-05	**Solid/Soil**		Sampled: 09/17/08 17:30			
8081A Pesticides	mg/kg	10/02/08	10/01/08 17:30	$135.00	0%	
8151 Herbicides	mg/kg	10/02/08	09/24/08 17:30	$195.00	0%	
Containers Supplied: Incremental Sub-sample (analyze entire content) (D)						

Released By	Date/Time	Received By	Date/Time
[signature] EL Abter	9/24/8 1:30p	[signature]	9-25-08 11:30am

SUBCONTRACT ORDER

TestAmerica Honolulu

HRI0096

Analysis	Units	Due	Expires	Interlab Price	Surch	Comments
Sample ID: HRI0096-06	**Solid/Soil**		Sampled: 09/17/08 17:30			
8081A Pesticides	mg/kg	10/02/08	10/01/08 17:30	$135.00	0%	
8151 Herbicides	mg/kg	10/02/08	09/24/08 17:30	$195.00	0%	
Containers Supplied:						
Incremental Sub-sample (analyze entire content) (D)						

Login Sample Receipt Check List

Client: TestAmerica Laboratories, Inc

Job Number: 580-11367-1

Login Number: 11367
Creator: Harding, Jessica
List Number: 1

List Source: TestAmerica Tacoma

Question	T / F/ NA	Comment
Radioactivity either was not measured or, if measured, is at or below background	True	
The cooler's custody seal, if present, is intact.	True	
The cooler or samples do not appear to have been compromised or tampered with.	True	
Samples were received on ice.	True	
Cooler Temperature is acceptable.	False	Temp @ 14.0
Cooler Temperature is recorded.	True	
COC is present.	True	
COC is filled out in ink and legible.	True	
COC is filled out with all pertinent information.	True	
There are no discrepancies between the sample IDs on the containers and the COC.	True	
Samples are received within Holding Time.	True	
Sample containers have legible labels.	True	
Containers are not broken or leaking.	True	
Sample collection date/times are provided.	True	
Appropnate sample containers are used.	True	
Sample bottles are completely filled.	True	
There is sufficient vol. for all requested analyses, incl. any requested MS/MSDs	True	
VOA sample vials do not have headspace or bubble is <6mm (1/4") in diameter.	N/A	
If necessary, staff have been informed of any short hold time or quick TAT needs	True	
Multiphasic samples are not present.	True	
Samples do not require splitting or compositing.	True	

APPENDIX B

Site Photographs

TestAmerica
ANALYTICAL TESTING CORPORATION

TestAmerica - Honolulu
99-193 Aiea Heights Drive Suite 121 • Aiea, HI 96701-3900
808-486-LABS (5227) • Fax 808-486-2456

Chain of Custody / Analysis Request Form

LABORATORY USE ONLY
LAB JOB NO. HE100716
LOCATION
CONTAINERS

Report to: Adam Luster
Company name: Myounghee Noh & Associates
Address: 99-1076 Iwaena St Suite 210A
City: AIEA State: HI Zip: 96701
Phone: 808-486-9219 Fax: 808-486-9219
Sampler: AL, EK, AT
Project identification
Job name: EWA Makai Middle Place II
Job number: 2Q 691
P.O. number:
Contact email address: adam@noh-associates.com
Data results needed: TAT STD
Sampling: # samples in shipment: 6
Indicate analyses requested: 8015 DRO, 8260 VOC, 8021 Pesticides, 8151 Herbicides

Item no.	Client sample ID	COMP	GRAB	Matrix: Water, Soil, Wastewater, Drinking water, Sludge, Liquid, Solid, Oil, Other	Preservation method	Sampling: Date	Time	No. of containers	Laboratory ID no
1	691 DU1 - SD				N	9/17/08	11:50a	1	HE100716-01
2	691 DU1 - SD - V				MeOH	9/17/08	1:45p	1	-02
3	691 DU1 - S 2.5-1				MeOH	9/17/08	5:30p	2	-03
4	691 DU1 - S 2.5-2				MeOH	9/17/08	5:30p	2	-04
5	691 DU1 - S 2.5-3				MeOH	9/17/08	5:30p	2	-05
6	691 DU1 - S 5.5				MeOH	9/17/08	5:30p	2	-06
7	LAST ENTRY								
8									
9									
10									

sample was cool upon receival

Released by (print / sign)	Date / time released	Delivery method	Received by (print / sign)	Company / Agency affiliation	Date / time received	Condition noted
Adam Luster	9/17/08 1:50	hand	M Hickish / [illegible]	TestAmerica	9/17/08 13:50	4°C

Comments: MTS Samples

Please check one:
☐ Dispose by lab
☐ Return to client
☐ Archive

COC REV 06/2006 Distribution: White - TestAmerica Yellow - TestAmerica Pink - Client Page 1 of 1

Photograph 1. A view of the subject site to the west from the entrance (September 15, 2008)

Photograph 2. A view of the subject entrance, blocked for unauthorized traffic (September 15, 2008).

Photograph 3. A view of an irrigation ditch/former cane road located west of the subject site. No surface water was observed at the time of the soil sampling (September 15, 2008).

Photograph 4. A view of the drainage pond at northwest corner of the subject site (September 15, 2008).

MNA 20691

Photograph 5. A view of the geologic stratum at the drainage excavation. Bedrock was observed at about 2ft below ground surface (September 15, 2008).

Photograph 6. Another view of the geologic stratum at the drainage excavation (September 15, 2008).

Photograph 7. A view of MNA staff measuring length of the subject site using a walking meter (September 16, 2008).

Photograph 8. A view of surface soil sampling. The white paper mulch shown was assumed to have been used for dust control therefore not included in the sampling (September 16, 2008).

MNA 20691

Photograph 9. A view of subsurface soil sampling. The houses south of the subject site is shown in the background (September 17, 2008).

Photograph 10. A closer view of boring for subsurface soil sampling (September 17, 2008).

Photograph 11. A view of soil incremental sampling. Laboratory-provided glass jars were used for equal volume of soil (September 17, 2008).

Photograph 12. A view of the direct-push drill tip for subsurface sampling. The sampler encountered refusal due to the presence of rocks (September 17, 2008).

MNA 20691