ALAN M. ARAKAWA
Mayor

WILLIAM R. SPENCE
Director

MICHELE CHOUTEAU McLEAN
Deputy Director

FILE COPY

FEB 8 2013

RECEIVED
'13 JAN 16 P1:25
OFC. OF ENVIRONMENTAL QUALITY CONTROL

COUNTY OF MAUI
DEPARTMENT OF PLANNING

January 3, 2013

Mr. Gary Hooser, Director
Office of Environmental Quality Control
235 South Beretania Street, Suite 702
Honolulu, Hawaii 96813

Dear Mr. Hooser:

SUBJECT: DRAFT ENVIRONMENTAL ASSESSMENT (EA) FOR THE PROPOSED KAHANA SUNSET SHORELINE AND SITE IMPROVEMENTS, LOCATED AT LAHAINA, MAUI, HAWAII; TMK: (2) 4-3-003:015 (EA 2012/0002) (SM1 2012/0003) (SSV 2012/0002) (CPA 2012/0003) (CIZ 2012/0007)

With this letter and on behalf of the Maui Planning Commission, the Department of Planning hereby transmits the Draft EA and anticipated Finding of No Significant Impact (FONSI) for the Kahana Sunset Shoreline and Site Improvements situated at TMK (2) 4-3-003:015, in the Lahaina District on the island of Maui for publication in the next available edition of the Environmental Notice.

Attached is a completed OEQC Publication Form, two (2) copies of the Draft EA anticipated FONSI, an Adobe Acrobat PDF file of the same, and an electronic copy of the publication form in MS Word. Simultaneous with this letter, we have submitted the summary of the action in a text file by electronic mail to your office.

If there are any questions, please contact Coastal Resources Planner James Buika at james.buika@mauicounty.gov or at (808) 270-6271.

Sincerely,

WILLIAM SPENCE
Director

Attachments
xc: Clayton Yoshida, AICP, Planning Program Administrator (PDF)
James A. Buika, Coastal Resources Planner (PDF)
Jacqueline Scheibel, Applicant's Representative
Keith Meyer, Applicant's Representative
Raymond Cabebe, Chris Hart & Partners
Project File
General File

WRS:JAB:rm
K:\WP_DOCS\PLANNING\EA\2012\0002_KahanaSunset\OEQC TRANSMITTAL. 12.20.12\OEQC GHooser 2012-12.doc

APPLICANT ACTIONS
SECTION 343-5(C), HRS
PUBLICATION FORM (JULY 2012 REVISION)

Project Name: **KAHANA SUNSET SHORELINE & SITE IMPROVEMENTS**
Island: **MAUI**
District: **LAHAINA**
TMK: **(2) 4-3-003:015**
Permits: **Building, Grading, Special Management Area, Shoreline Setback Variance, Community Plan Amendment, Change in Zoning, Conservation District Use**

Approving Agency:
Maui Planning Commission, County of Maui
c/o Department of Planning, 250 South High Street, Wailuku, Hawaii 96793
Mr. William Spence, Director, (808) 270-7634

Applicant:
Kahana Sunset Association of Apartment Owners (AOAO)
4909 Lower Honoapiilani Highway, Lahaina, Hawaii 96761
Ms. Jacqueline Scheibel, (707) 292-4691
Mr. Keith Meyer, (541) 231-848

Consultant:
Chris Hart & Partners, Inc.
115 North Market Street, Wailuku, Hawaii 96793
Mr. R. Raymond Cabebe, (808) 270-1955

Status (check one only):

_**X**_DEA-AFONSI — Submit the approving agency notice of determination/transmittal on agency letterhead, a hard copy of DEA, a completed OEQC publication form, along with an electronic word processing summary and a PDF copy (you may send both summary and PDF to oeqc@doh.hawaii.gov); a 30-day comment period ensues upon publication in the periodic bulletin.

__FEA-FONSI — Submit the approving agency notice of determination/transmittal on agency letterhead, a hard copy of the FEA, an OEQC publication form, along with an electronic word processing summary and a PDF copy (send both summary and PDF to oeqc@doh.hawaii.gov); no comment period ensues upon publication in the periodic bulletin.

__FEA-EISPN — Submit the approving agency notice of determination/transmittal on agency letterhead, a hard copy of the FEA, an OEQC publication form, along with an electronic word processing summary and PDF copy (you may send both summary and PDF to oeqc@doh.hawaii.gov); a 30-day consultation period ensues upon publication in the periodic bulletin.

__Act 172-12 EISPN — Submit the approving agency notice of determination on agency letterhead, an OEQC publication form, and an electronic word processing summary (you may send the summary to oeqc@doh.hawaii.gov). NO environmental assessment is required and a 30-day consultation period upon publication in the periodic bulletin.

__DEIS — The applicant simultaneously transmits to both the OEQC and the approving agency, a hard copy of the DEIS, a completed OEQC publication form, a distribution list, along with an electronic word processing summary and PDF copy of the DEIS (you may send both the summary and PDF to oeqc@doh.hawaii.gov); a 45-day comment period ensues upon publication in the periodic bulletin.

__FEIS — The applicant simultaneously transmits to both the OEQC and the approving agency, a hard copy of the FEIS, a completed OEQC publication form, a distribution list, along with an electronic word processing summary and PDF copy of the FEIS (you may send both the summary and PDF to oeqc@doh.hawaii.gov); no comment period ensues upon publication in the periodic bulletin.

__ Section 11-200-23 Determination — The approving agency simultaneous transmits its determination of acceptance or nonacceptance (pursuant to Section 11-200-23, HAR) of the FEIS to both OEQC and the applicant. No comment period ensues upon publication in the periodic bulletin.

__Statutory hammer Acceptance — The approving agency simultaneously transmits its notice to both the applicant and the OEQC that it failed to timely make a determination on the acceptance or nonacceptance of the applicant's FEIS under Section 343-5(c), HRS, and that the applicant's FEIS is deemed accepted as a matter of law.

__Section 11-200-27 Determination — The approving agency simultaneously transmits its notice to both the applicant and the OEQC that it has reviewed (pursuant to Section 11-200-27, HAR) the previously accepted FEIS and determines that a supplemental EIS is not required. No EA is required and no comment period ensues upon publication in the periodic bulletin.

__Withdrawal (explain)

Summary (Provide proposed action and purpose/need in less than 200 words. Please keep the summary brief and on this one page)**:**

The Kahana Sunset AOAO is proposing to construct a replacement seawall and drainage improvements within the shoreline setback on an existing 4.467 acre 79-unit condominium resort site. The applicant is also proposing a Community Plan Amendment from Single Family to Hotel and a Change in Zoning from R-3 Residential to H-M Hotel District in order to establish land use consistency and conformity with the existing use. No additional units are proposed.

An approximately 114-foot existing seawall along with an existing concrete stairway will be demolished. The replacement seawall will be relocated mauka of the State designated shoreline with a new stairway approximately 30 feet inland from the existing stairs. The proposed retreat of the seawall will serve to protect existing habitable structures, widen the beach, and prevent underlying soils from entering the ocean. The proposed drainage system improvements will help to prevent sediments and pollutants from contaminating the marine environment.

The mitigation improvements are the result of a Master Plan for Strategic Retreat that was requested by the Maui Planning Commission as part of a 2009 SMA Emergency Permit granted to protect Building F and a 2010 SMA Emergency Permit granted to protect Building A.

HRS CHAPTER 343 ENVIRONMENTAL ASSESSMENT
In Support Of
APPLICATIONS FOR
SPECIAL MANAGEMENT AREA USE PERMIT,
SHORELINE SETBACK VARIANCE,
COMMUNITY PLAN AMENDMENT
& CHANGE IN ZONING

KAHANA SUNSET SHORELINE & SITE IMPROVEMENTS

4909 Lower Honoapiilani Road
Lahaina, Maui, Hawaii
Tax Map Key: (2) 4-3-003:015

Prepared for:
Kahana Sunset AOAO
4909 Lower Honoapiilani Road
Lahaina, Hawaii 96761
Phone: (808) 669-8011

Prepared by:
Chris Hart & Partners, Inc.
Landscape Architecture & City and Regional Planning
115 North Market Street
Wailuku, Hawaii 96793
Phone: (808) 242-1955
Facsimile: (808) 242-1956

CHRIS HART & PARTNERS, INC.

JULY 2012

HRS CHAPTER 343 ENVIRONMENTAL ASSESSMENT
In Support Of
APPLICATIONS FOR
SPECIAL MANAGEMENT AREA USE PERMIT,
SHORELINE SETBACK VARIANCE,
COMMUNITY PLAN AMENDMENT
& CHANGE IN ZONING

KAHANA SUNSET SHORELINE & SITE IMPROVEMENTS

4909 Lower Honoapiilani Road
Lahaina, Maui, Hawaii
Tax Map Key: (2) 4-3-003:015

Prepared for:
Kahana Sunset AOAO
4909 Lower Honoapiilani Road
Lahaina, Hawaii 96761
Phone: (808) 669-8011

Prepared by:
Chris Hart & Partners, Inc.
Landscape Architecture & City and Regional Planning
115 North Market Street
Wailuku, Hawaii 96793
Phone: (808) 242-1955
Facsimile: (808) 242-1956

CHRIS HART & PARTNERS, INC.

JULY 2012

TABLE OF CONTENTS

I. PROJECT INFORMATION 1

A. PREFACE 1
B. PURPOSE OF THE REQUEST 1
C. PROJECT PROFILE 1
D. IDENTIFICATION OF THE APPLICANT/OWNER 2
E. CONSULTANTS 2
F. ACCEPTING AGENCY 3
G. MAJOR LAND USE, DEVELOPMENT AND CONSTRUCTION APPROVALS 3
H. PRE-CONSULTED AGENCIES& PRIVATE INTERESTS 3

II. DESCRIPTION OF THE PROPERTY AND PROPOSED ACTION 5

A. PROPERTY LOCATION AND DESCRIPTION 5
B. EXISTING LAND USE 5
C. LAND USE DESIGNATIONS 6
D. PROJECT BACKGROUND AND NEED 6
E. ALTERNATIVES 8
F. DESCRIPTION OF PROPOSED ACTION (PREFERRED ALTERNATIVE) 11
G. SHORELINE SETBACK ASSESSMENT. 12

III. DESCRIPTION OF THE EXISTING ENVIRONMENT, POTENTIAL IMPACTS, AND MITIGATION MEASURES 15

A. PHYSICAL ENVIRONMENT 15
1. Land Use 15
2. Shoreline Conditions and Processes 16
3. Marine Resources 17
4. Topography and Soils 17
5. Flood and Tsunami Zone 18
6. Terrestrial Biota (Flora and Fauna) 19
7. Air Quality 19
8. Noise Characteristics 20
9. Archaeological/Historical Resources 20
10. Visual Resources 21
B. SOCIO-ECONOMIC ENVIRONMENT 22
1. Population and Housing 22
2. Economy 22
3. Cultural Resources 23
C. PUBLIC SERVICES 23
D. INFRASTRUCTURE 24
1. Water 24
2. Sewer 24
3. Drainage 25
4. Roadway 26
5. Electrical, Telephone, Cable and Data Systems 27

IV. RELATIONSHIP TO GOVERNMENTAL PLANS, POLICIES, AND CONTROLS 28

A. STATE LAND USE LAW 28
B. COUNTY OF MAUI 2030 GENERAL PLAN 28
C. DRAFT MAUI ISLAND PLAN 30
D. WEST MAUI COMMUNITY PLAN 32
E. MAUI COUNTY ZONING 34
F. MAUI COUNTY SHORELINE RULES....35

V. SPECIAL MANAGEMENT AREA OBJECTIVES AND POLICIES 37

A. RECREATIONAL RESOURCES....37
B. HISTORICAL/CULTURAL RESOURCES 38
C. SCENIC AND OPEN SPACE RESOURCES 39
D. COASTAL ECOSYSTEMS 40
E. ECONOMIC USES....40
F. COASTAL HAZARDS 41
G. MANAGING DEVELOPMENT....42
H. PUBLIC PARTICIPATION 42
I. BEACH PROTECTION 43
J. MARINE RESOURCES....43

VI. ENVIRONMENTAL ASSESSMENT SIGNIFICANCE CRITERIA....45

VII. JUSTIFICATION FOR SHORELINE SETBACK VARIANCE 50

VIII. FINDINGS AND CONCLUSIONS....53

IX. REFERENCES....54

ATTACHMENTS

FIGURES

Figure No. 1	Regional Location Map
Figure No. 2	Aerial Map
Figure No. 3	Tax Map
Figure No. 4	State Land Use Boundary Map
Figure No. 5	West Maui Community Plan
Figure No. 6	County Zoning Map
Figure No. 7	Flood Insurance Rate Map
Figure No. 8	Special Management Area Map
Figure Nos. 9.1 – 9.4	Site Photographs
Figure No. 10	Concept Master Plan
Figure No. 11	Existing Drainage System Plan
Figure No. 12	Annual Erosion Hazard Rate Map
Figure No. 13	Soils Map
Figure No. 14	Coastal Scenic Resources Map

APPENDICES

Appendix A	Summary of Public and Agency Consultation
Appendix B	Shoreline Approvals
Appendix C	1968 Variance
Appendix D	Preliminary Structural Engineering Report
Appendix E	Shoreline Survey Map
Appendix F	Wave Climate Study
Appendix G	Geoanalytical Report
Appendix H	Cultural Impact Assessment
Appendix I	Archaeological Monitoring Plan
Appendix J	Preliminary Engineering Report

Appendix K Preliminary Drainage Report

I. PROJECT INFORMATION

A. PREFACE

The Kahana Sunset is a residential condominium development built in 1971 on a 4.467 acre site along the coast of West Maui. The site consists of six apartment buildings containing 79 units, a support building containing an office, a managers residence, and laundry, and a swimming pool with a cabana. Site amenities include garden gazebos, barbeques, outdoor showers, and parking lot.

B. PURPOSE OF THE REQUEST

The purpose of this Environmental Assessment (EA) is to analyze the potential impacts related to the proposed construction of a replacement seawall fronting the shoreline at the *makai* boundary of the subject property and a Community Plan Amendment (CPA). This EA is submitted in support of the following land use entitlement and shoreline area application requests: 1) Special Management Area (SMA) Use Permit; 2) Shoreline Setback Variance (SSV); 3) Community Plan Amendment (CPA); and 4) Change in Zoning (CIZ). Depending on the final determination of the certified shoreline, a State Conservation District Use Permit (CDUP) Application may also be required. Preparation of an EA is required in compliance with the provisions of HRS Chapter 343, since the proposed development involves both an action within the Shoreline Setback Area as well as a CPA. In addition, the project area is located within the SMA, the area of jurisdiction of the Hawaii Coastal Zone Management (CZM) program, and possibly the State Conservation District.

C. PROJECT PROFILE

Proposed Project:	Seawall Reconstruction, Storm Drainage Upgrades/Improvements, Relocation of Site Amenities
Project Address:	4909 Lower Honoapiilani Road Lahaina, Maui, Hawaii 96761
Project TMK:	(2) 4-3-003:015
Parcel Size:	4.467 acres (194,583 square feet)
Existing Land Use:	Residential Condominium Resort
Access:	Lower Honoapiilani Road

D. IDENTIFICATION OF THE APPLICANT/OWNER

Land Owner:	Kahana Sunset AOAO
Address:	4909 Lower Honoapiilani Road Lahaina, Maui, Hawaii 96761
Contact:	Ms. Jacque Scheibel, Co-Chair Kahana Sunset AOAO Board Long Range Planning Committee 5575 Foothill Ranch Road Santa Rosa, California 95404 Phone: (808) 669-9952 Mobile: (707) 292-4691
Contact:	Mr. Keith Meyer, Co-Chair Kahana Sunset AOAO Board Long Range Planning Committee 7650 NE Meyer Lane Corvallis, Oregon 97330-9666 Phone: (541) 231-8487

E. CONSULTANTS

Land Use Planner & Landscape Architect:	Chris Hart & Partners, Inc. 115 N. Market Street Wailuku, Maui, Hawaii 96793
Phone:	Voice: (808) 242-1955 Facsimile: (808) 242-1956
Contact: Email:	Mr. Christopher L. Hart, ASLA, President chart@chpmaui.com
Civil Engineer:	Marc M. Siah & Associates 820 S. Beretania Street, Suite 201 Honolulu, Hawaii 96813
Phone:	Voice: (808) 538-7180 Facsimile: (808) 528-4352
Contact: Email:	Mr. Marc M. Siah, President msiah@mmsengineering.com
Structural Engineer:	AAA Structural Engineering Inspection & Evaluation Services

	225 Queen Street, Suite 10C Honolulu, Hawaii 96813
Phone:	(808) 398-6749
Contact:	Mr. Kiumars Siah, Principal
Email:	contact@hawaiistructuralengineer.com

F. ACCEPTING AGENCY

Agency:	Maui Planning Commission c/o Department of Planning, County of Maui 250 South High Street Wailuku, Maui, Hawaii 96793
Phone:	Voice: (808) 270-7735 Facsimile: (808) 270-7634
Contact:	Mr. William Spence

G. MAJOR LAND USE, DEVELOPMENT AND CONSTRUCTION APPROVALS

1. Grading and Grubbing Permit approval from the Department of Public Works (DPW).
2. Building Permits for future structures from the DPW.
3. Demolition Permit from DPW.
4. Special Management Area Use Permit by the Maui Planning Commission, via the Department of Planning.
5. Shoreline Setback Variance approval by the Maui Planning Commission, via the Department of Planning.
6. Community Plan Amendment approval by the Maui County Council.
7. Change in Zoning approval by the Maui County Council.
8. Conservation District Use Permit from the State Department of Land and Natural Resources.

H. PRE-CONSULTED AGENCIES& PRIVATE INTERESTS

See: Appendix "A", "Summary of Public and Agency Consultation

COUNTY OF MAUI

1. Department of Environmental Management
2. Department of Fire Control & Public Safety

3. Department of Housing & Human Concerns
4. Department of Parks and Recreation
5. Department of Planning
6. Department of Public Works
7. Department of Transportation
8. Department of Water Supply
9. Police Department

STATE OF HAWAII

1. Department of Business, Economic Development & Tourism
2. Department of Education
3. Department of Hawaiian Homelands
4. Department of Health
5. Department of Land & Natural Resources
6. Department of Land & Natural Resources, Historic Preservation Division
7. Department of Land & Natural Resources, Office of Coastal Conservation Lands (OCCL)
8. Department of Transportation
9. University of Hawaii Environmental Center
10. University of Hawaii Sea Grant Extension Service
11. Office of Hawaiian Affairs

FEDERAL

1. USDA, Natural Resources Conservation Service
2. U.S. Fish & Wildlife Service
3. U.S. Army Corps of Engineers

OTHER

1. Maui Electric Company
2. Hawaiian Telcom
3. Neighboring Property Owners and Registered Lessees within 500 feet

II. DESCRIPTION OF THE PROPERTY AND PROPOSED ACTION

A. PROPERTY LOCATION AND DESCRIPTION

The subject property is located at 4909 Lower Honoapiilani Road, Island of Maui, Hawaii, Tax Map Key (2) 4-3-003:015 (**See:** Figures No. 1 "Regional Location Map", No. 2 "Aerial Map", and No. 3 "Tax Map"). The property is located on the northwest coast of West Maui, approximately 7 miles north of central Lahaina Town and approximately 1.5 miles south of the resort community of Kapalua. The project site is situated along Keonenui Bay, between Haukoe and Alaeloa Points, in an area collectively referred to as Alaeloa. Access to the property is via Lower Honoapiilani Road.

The 4.467-acre (194,583 square feet) parcel is located on Keonenui Bay, midway between Haukoe and Alaeloa Points. The property ranges in elevation from sea level at its *makai* boundary to approximately 49 feet above mean sea level (AMSL) at the *mauka* boundary with Lower Honoapiilani Road. Erosion has been ongoing along this entire shoreline area for a considerable length of time.

B. EXISTING LAND USE

Existing structures on the parcel include six (6) residential condominium buildings, a support building with an office, manager's residence, and a laundry facility. There are 16 one-bedroom units and 63 two-bedroom units. The units are individually owned by part-time residents. All are used as vacation rentals except for one. Land uses on neighboring parcels are characterized largely by single-family residential development and some multi-family development similar to the Kahana Sunset Residential Condominiums. The properties fronting the entirety of the shoreline between Haukoe and Alaeloa Points are armored by individual seawalls that together form a nearly contiguous structure along the shoreline.

C. LAND USE DESIGNATIONS

The project site lies in the State *Urban* District, is proposed for *Single-Family* use by the West Maui Community Plan and is zoned *R-3 Residential District* by Maui County. The site is located within the *Special Management Area* (SMA), the area of jurisdiction of the Hawaii Coastal Zone Management (CZM) program.

State Land Use Classification:	Urban (**See**: Figure No. 4, "State Land Use Boundary Map")
West Maui Community Plan:	SF Single Family (**See**: Figure No. 5, "West Maui Community Plan ")
County Zoning:	R-3 Residential (**See**: Figure No. 6, "County Zoning Map")
Flood Zone Designation:	X: Outside 0.2% annual chance floodplain; AE: 100-year floodplain (BFE: 17 ft.) VE: Coastal 100-year floodplain with velocity (BFE: 17 ft.) (**See**: Figure No. 7, "Flood Insurance Rate Map")
Special Designations:	Special Management Area (SMA) (**See**: Figure No. 8, "Special Management Area Map")

D. PROJECT BACKGROUND AND NEED

The existing 79-unit apartment-condominium was constructed in 1971. Building permits indicate that Building "A" (north side) was approximately 15 feet from the shoreline and Building "F" (south side) was approximately 50 feet from the shoreline. Over the years beginning in 1975, permitted protective shoreline structures, or seawalls, have been constructed, with County, State, and Federal approvals, to protect the habitable structures of Kahana Sunset. However, due to coastal erosion and the current shoreline definition criteria, Building "A" is now approximately 8 feet and Building "F" is approximately 10 feet from the assumed shoreline. Seasonal coastal erosion events have caused portions of the existing seawalls to fail over time. Following is a chronological list of authorizations obtained for construction and/or repair of erosion control structures (**See**: Appendix "B", "Shoreline Approvals":

Year/Date	Action	Approvals	Permits/Approvals
1975	Reinforced concrete seawall	Planning Dept., DLNR, Army Corps of Engineers	Letters of Approval
1978	Shoreline protection, fill caves	Planning Dept., DLNR, Army Corps of Engineers	Shoreline Setback Approval, CDUP
1996	Repair seawall	Planning Dept.	Shoreline Setback Approval (SSA 96/0002), SMA Exemption (SM5 96/0005)
2003	Repair seawall	Planning Dept.	Two (2) SMA Emergency Permits (SM3 2003/0001 & SM3 2003/0002)
2009	Foundation seawall "F"	Planning Dept.	SMA Emergency Permit (SM3 2009/0005)
2010	Foundation seawall "A"	Planning Dept.	SMA Emergency Permit (SM3 2010/0001)
2012	Remove unstable soils/gunite top of bank	Planning Dept.	SMA Minor Permit (SM2 2012/0051) & Shoreline Setback Approval (SSA 20120029)

In 2009, Kahana Sunset experienced severe damage to its seawalls, threatening the habitable structures. The foundation of Building "F" was severely undermined and the lanai between the building and the seawall eventually collapsed. An SMA Emergency Permit (SM3 2009/0005) allowed reconstruction of the lanai, the seawall and reinforcement of the Building "F" foundation. The seawall fronting Building "A" sustained damage and repair work was authorized by another SMA Emergency Permit (SM3 2010/0001). In 2010, the "serpentine" seawall fronting part of Building "F" was removed along with two set of steps at the request of the State since they were apparently unauthorized structures. The serpentine seawall collapsed prior to its removal and posed a safety hazard. In 2011, the seawall between Buildings "A" and "F" began developing severe cracks and is in danger of collapsing due to undermining of the foundation, with sink holes appearing landward of the seawall. (**See:** Figure No. 9.4, "Site Photographs").

Most of the shoreline at Keonenui Bay is either naturally hardened or artificially armored with vertical reinforced concrete stone masonry seawalls. The natural wave action in the area is magnified and continues to erode the clay and ash substrate below the base of the unprotected natural walls of Keonenui Bay, threatening public safety and adding silt to the adjacent coastal waters.

The purpose of this project is to enhance public safety and create a long-term solution that will stabilize the bank at the shoreline of Keonenui Bay in order to:

- Prevent future erosion of the property and potential undermining of neighboring shoreline protection structures; and
- Prevent earthen soils from eroding and causing siltation of the coastal waters.

Portions of the existing seawall and the entire stair structure will be demolished and removed from within the Shoreline Setback Area. A new replacement retaining wall with steps to the beach is proposed to be constructed *mauka* of the proposed certified shoreline, retreating as far back as thirty feet. This will serve to widen the beach and further mitigate risks associated with seasonal coastal hazards while continuing to protect the existing residential and drainage structures. A Shoreline Setback Variance (SSV) is required for this structure pursuant to §12-203-14 of the Shoreline Rules for the Maui Planning Commission. Justification for approval of the SSV is provided in Chapter VII of this document.

Land Use Designations. The designations of (SF) Single-Family in West Maui Community Plan and County Zoning (R-3) Residential District are both inconsistent with the apartment-condominium use of the property. The existing resort property received a variance in 1968 for the "Construction of an Apartment Building with Accessory Uses" (**See**: Appendix "C"). Therefore, the goal of this land use entitlement and shoreline/SMA development process is to establish permanent land use consistency and conformity, as well as shoreline protection.

E. ALTERNATIVES

Seawall. The following alternatives were considered in determining the preferred option for the proposed replacement seawall reconstruction:

No Action: This alternative would forego any improvements associated with the proposed project.

Positive Impacts: By leaving the property in its existing state, the short term impacts associated with demolition and construction would be avoided.

Negative Impacts: The failing seawall will continue to pose a public safety hazard and possible catastrophic collapse. The existing multi-family structures may eventually become threatened either by gradual flank erosion over time or due to a heavy storm event. Water quality in the adjacent coastal waters will continue be compromised by erosion-borne sediment. This alternative was deemed infeasible and dropped from consideration.

No Seawall: This alternative would remove the failing seawall.

Positive Impacts: Removal of the seawall would allow the beach/dune process to occur naturally. There would be no immediate construction-related impacts associated with the construction of the seawall.

Negative Impacts: Nearshore water quality and public safety would remain threatened by gradual erosion of the beach over time and eventually threaten existing structures. A significant amount of Kahana Sunset property would be lost to erosion. This alternative was deemed infeasible and dropped from consideration.

Alternative Wall Designs: Several alternative designs for the construction of the proposed wall were considered.

a. Retaining Wall (Option 1): This alternative would involve rebuilding of the seawall in it current location.

Positive Impacts: This alternative would effectively keep the seawall at the existing assumed shoreline, with some portions within State land, depending on the final determination of the shoreline. Existing amenities could remain in place.

Negative Impacts: Portions of the seawall may fall within State land, requiring additional permitting. The seawall would be subject to the same wave velocity that it is currently experiencing. This alternative was deemed infeasible and dropped from consideration.

b. Retaining Wall (Option 2): This alternative would involve construction of a approximately forty-foot wide stairway with long flanking walls on both sides.

Positive Impacts: This alternative would provide a open feel looking makai from the courtyard while still providing protection from coastal erosion to Buildings "A" and "F".

Negative Impacts: This option would surrender much of the Kahana Sunset courtyard area. The stairway would not provide adequate protection from coastal erosion. This alternative was deemed infeasible and dropped from consideration.

Land Use Designations. The following alternatives were considered in determining the preferred option for the proposed Community Plan Amendment and Change in Zoning:

1. **No Action:** This alternative would forego any changes to land use designations.

Positive Impacts: By leaving the property in its existing zoning, the existing variance stays in effect.

Negative Impacts: Issues with non-conformity and inconsistency between the existing land use and the land use designations may hamper receiving future entitlements and permits. This may limit future improvement plans for Kahana Sunset. This alternative was deemed infeasible and dropped from consideration.

2. **Multi-family and A-2 Apartment District Designation:** This alternative would propose a Community Plan Amendment from Single-Family to Multi-Family and Change in Zoning from R-3 Residential District to A-2 Apartment District.

Positive Impacts: This alternative has a slightly lower Floor Area-Lot Area density ratio than hotel (90% to 100%).

Negative Impacts: Kahana Sunset would still be non-compliant with parking standards and transient vacation rental restrictions. This alternative was deemed infeasible and dropped from consideration.

F. DESCRIPTION OF PROPOSED ACTION (PREFERRED ALTERNATIVE)

The Applicant proposes to demolish a portion of the existing seawall sited within the Shoreline Setback Area, and construct a structurally engineered shoreline armoring system in order to stabilize the shoreline (**See:** Figure No. 10, "Concept Master Plan" and Appendix "D", "Preliminary Structural Engineering Report"). A detailed description of the planned improvements follows:

Seawall. Construction of the proposed replacement seawall will first involve demolition and removal of approximately 114 feet of an existing CRM seawall and an approximately ten-foot wide concrete stairway. This would be followed by the construction of an approximately 125-foot 15-inch wide replacement concrete wall with textured face and reinforced footing, approximately 10 feet inland of the existing wall. A 13-foot wide stairway will be constructed approximately 30 feet inland of the existing stairs. The seawall at the drainage outfall will be located approximately 3 feet *mauka* of its current location. This will have the effect of widening the sandy beach accordingly.

Amenities. The existing gazebo will be relocated inland and the existing shower will be relocated to the south of the new stairway.

Drainline. The existing approximately 300-foot long 36-inch corrugated metal drainline, identified as Existing Storm Drainline (ESD) No. 5, running from a drywell at the top of the courtyard to the existing seawall near Building "A" is proposed to be replaced due to its age (**See**: Figure No. 11) . The outlet at the seawall may be shifted approximately 5 feet north, towards Building "A" and approximately 3 feet to the east (landward). Other drainage improvements include:

- Upsize ESD No. 6 (approximately 70 feet) and Inlet No. 1.
- Replace Open Channel No. 2 with an inlet and subsurface drainline to ESD No. 5.
- Retrofit and install filters on Inlet Nos. 1 & 2 to capture sediments, debris, and other pollutants.

Landscape Planting. The existing landscaping is proposed to be renovated and new landscape vegetation will include drought tolerant Hawaii native trees, shrubs, and ground cover, wherever possible. Landscape plants will be watered using an automatic irrigation controller with "rain sensor" shut-off valve to prevent over watering. Wherever practical, the project will utilize drip irrigation to reduce water usage. Landscape water usage will be lowered further by adding soil top dressing, to prevent water evaporation from the soil. Turf grass will be used in central

courtyard within the shoreline setback area, to maintain an open view across the *makai* portion of the site.

Land Use Designations. The applicant is requesting a Community Plan Amendment (CPA) from Multi-Family to Hotel and a Change in Zoning (CIZ) from R-3 Residential to H-M Hotel District in order to have the land use designations consistent with the existing use. The following table compares the existing and proposed land use criteria:

	R-3 (existing)	H-M (proposed)	1971	Kahana Sunset
Allowable Use	Long Term Residential	Transient Vacation Rental (TVR) allowable	TVR allowable	Owner/TVR
Area (min.)	10,000 SF	15,000 SF	10,000 SF	194,583
Height (max.)	2-stories or 30FT	6-Stories	Variance	1 - 3 stories
Unit Density (max.)	1 unit / 10,000 SF	NA	Variance	1 unit / 2,432 SF
Lot Coverage (max.)	NA	30%	Variance	22.0%
Floor Area-Lot Area Ratio (max.)	NA	100%	Variance	58.9%
Front/Rear Yards (min.)	Front: 15FT; Rear: 1-story: 6FT 2-story: 10FT	½ height of bldg. min.: 15 FT	Variance	Front: >15FT for 1-story, >20FT for 3-story; Rear: >15FT for 2-story
Side Yards (min.)	1-story: 6FT 2-story: 10FT	1-2 st: 10 FT 3-4 st: 15 FT 5-6 st: 20 FT	Variance	all structures no closer than 15 FT
Parking (min.)	2 stalls/ main 1 stall/ ohana	3 stalls/ 1 unit	Variance	1.3 stalls / 1 unit

If the CPA and CIZ requests are granted, the 1968 variance would no longer need to be in effect.

G. SHORELINE SETBACK ASSESSMENT.

The shoreline fronting the parcel was submitted to the State of Hawaii by Valencia Land Surveying for certification based on a shoreline survey performed on July 1, 2011. (**See**: Appendix "E", "Shoreline Survey Map").

§12-203-6 "Establishment of shoreline setback lines" of the Shoreline Rules for the Maui Planning Commission states:

(a) All lots shall have a shoreline setback line that is the greater of the distances from the shoreline as calculated under the methods listed below or the overlay of such distances:

(i) Twenty-five feet plus a distance of fifty times the annual erosion hazard rate from the shoreline;

(ii) Based on the lot's depth as follows:

…

(C) A lot with an average lot depth of one hundred sixty feet or more shall have a shoreline setback line located at a distance from the shoreline equal to twenty-five percent of the average lot depth, but not more than one hundred fifty feet.

§12-203-4 of the Shoreline Rules states,

Where the shoreline is fixed by:

(1) Artificial structures that are nonconforming or that have been approved by appropriate government agencies and for which engineering drawings exist to locate the interface between the shoreline and the structure, or

(2) Exposed natural stabilized geographic features such as cliffs and rock formations, the Annual Erosion Hazard Rate shall cease at the interface."

The subject parcel is fronted by a high cliff and artificial structures "*that have been approved by appropriate government agencies and for which engineering drawings exist to locate the interface between the shoreline and the structure.*"

Using the Average Lot Depth (ALD) method, the shoreline setback is calculated as follows:

Average Lot Depth:	263.48
	432.04
	+222.18
	917.70
	917.70 / 3 = 305.90 feet
Setback:	305.90 x .25 = **76.48 feet**

Using the Annual Erosion Hazard Rate (AEHR) method, the shoreline setback is calculated as follows (**See**: Figure No. 12, "Annual Erosion Hazard Rate Map"):

Transect	AEHR (feet)		Setback (feet)
5	1.2	x 50 years + 25 feet	**25 (85)**
6	0.9		**25 (70)**
7	0.9		**25 (70)**
8	0.9		**25 (70)**
9	1.0		**25 (75)**
10	0.9		**25 (70)**
11	0.8		**25 (65)**

Assuming that shoreline is considered "fixed" (by legal artificial structures or natural features) at all transects, the effective setback is 25 feet.

Since the ALD setback is greater, the shoreline setback for the subject property is 76.48 feet.

All of existing Buildings "A" & "F" and portions of Building "B" are within the shoreline setback area. Chapter VII of this application addresses the justification for the Shoreline Setback Variance (SSV).

III. DESCRIPTION OF THE EXISTING ENVIRONMENT, POTENTIAL IMPACTS, AND MITIGATION MEASURES

A. PHYSICAL ENVIRONMENT

1. Land Use

Existing Conditions. The subject property is located in Napili, in an area known as Alaeloa, at TMK: (2) 4-3-015:003 (**See**: Figures No. 1 "Regional Location Map", No. 2 "Aerial Map", and No. 3 "Tax Map"). The parcel is located along Keonenui Bay, situated on the northwest coast of West Maui, seven miles north of Lahaina Town and 1.5 miles south of Kapalua. The parcel and surrounding parcels are zoned for residential use.

The following is a description of zoning, community plan designations, and existing land uses adjacent and in close proximity to the subject property:

North:	Zoning: R-3 Residential Community Plan: Single Family, Public Quasi-Public State Land Use: Urban **Existing uses**: Single-Family Residence, Church.
South:	Zoning: R-3 Residential Community Plan: Single Family State Land Use: Urban **Existing uses**: Single-Family Residence.
East:	Zoning: A-1 Apartment Community Plan: Multi Family State Land Use: Urban **Existing uses**: Lower Honoapiilani Rd.; Multi-Family (Napili Villas).

West:

Zoning: N/A
Community Plan: N/A
State Land Use: Conservation
Existing uses: Pacific Ocean.

Potential Impacts and Mitigation Measures. The site of the proposed project is located within an area that is zoned for residential use and community planned for single family and multi-family residential uses. The property received a variance in 1968 permitting the construction of Kahana Sunset Condominium within the R-3 Residential District. Kahana Sunset is requesting a Community Plan Amendment and Change in Zoning in order to bring the existing use into conformity and have land use designations be consistent. Section IV.E of this report contains justification .

2. Shoreline Conditions and Processes

Existing Conditions. The subject property is located along Keonenui Bay, between Alaeloa Point and Haukoe Point, approximately 3500 feet south of Napili Bay. The beach in the project vicinity is a pocket beach typical of this stretch of coastline, about 500 - 600 feet long and nestled between the two headlands, which protrude 400 to 500 feet seaward. The properties north and south of Kahana Sunset are single family residences. Vertical rock and concrete walls protect the properties along the entire bay. A reef system, approximately 400 meters (1,300 feet) offshore, has a significant influence on wave energy as it approaches the shoreline (**See:** Appendix "F", "Wave Climate Study")

Along the bay, the sandy beach has its greatest width fronting the Kahana Sunset along approximately 180 feet of the southern *makai* boundary. To the south, the beach narrows dramatically, transitioning to an irregular, rough, rocky shore. To the north, the substrate at the base of the cliff is a volcanic conglomerate of variable hardness, with remnants of CRM facing in some areas.

Potential Impacts and Mitigation Measures. Construction of the proposed replacement seawall should have no significant negative impact on shoreline conditions and processes since the approximately 125-foot wall will replace an existing failing seawall. The remaining 500 feet of shoreline fronting Keonenui Bay is already armored with vertical walls. The proposed replacement wall will tie in to the existing vertical wall directly to the Building "A" wall to the north and the Building "F" wall to the south. Approximately 10 feet at the drainage outlet at the north end will be setback approximately 3 feet, the rest of the replacement wall will be built between approximately 10 and 30 feet landward of the existing seawall,

increasing beach width accordingly. In addition to providing erosion protection, the seawall will retain fill on the landward side. Therefore, the replacement seawall is not anticipated to significantly impact existing coastal processes, and should not aggravate or contribute to further erosion.

3. Marine Resources

Existing Conditions. The nearshore seafloor in Keonenui Bay consists primarily of sand in the central part of the bay, and coral, limestone and rock along the perimeter and beyond about 400 feet offshore. There is a reef system, approximately 400 meters (1,300 feet) offshore (**See:** Appendix "F", "Wave Climate Study").

Potential Impacts and Mitigation Measures. The construction of the proposed sea/retaining wall on the subject property will take place at approximately 8 feet AMSL, and as such is expected to have no direct impact on marine resources. The wall construction is expected to be conducted during the season when tides are at its lowest. Best Management Practices (BMPs) will be implemented to mitigate construction-phase impacts on the nearshore environment. In the long term, construction of the wall may serve to improve turbidity conditions in the bay, given that the proposed action will mitigate further erosion of the silty clay substrate. Filters at the onsite drainage inlets will improve storm water quality by removing contaminants and pollutants before entering the ocean.

4. Topography and Soils

Existing Conditions. The elevation on the project site ranges from approximately 49 feet above mean sea level (AMSL) along Lower Honoapiilani Road to approximately 8 feet AMSL at the base of the existing retaining walls along the sandy beach. The ground is generally sloping approximately 9% downward in a southwesterly direction toward the ocean.

According to the "Soil Survey of the Islands of Kauai, Oahu, Maui, Molokai and Lanai, State of Hawaii (August 1972)," prepared by the United States Department of Agriculture Soil Conservation Service, the soils within the project site are classified as Kahana Silty Clay, 7 to 15 percent slopes, (KbC) and Rough Broken and Stony Land (rRS). KbC is characterized by slow runoff, slight to moderate erosion hazard, and moderately rapid permeability. The rRS series consists of very steep, stony areas where runoff is rapid (**See**: Figure No. 13, "Soils Map").

Weidig Geoanalysts prepared a *Geoanalytical Report* (2006) for Kahana Sunset that investigated and evaluated the geological conditions along the shoreline, particularly in the vicinity of the existing seawalls (**See**: Appendix "G").

Potential Impacts and Mitigation Measures. The proposed retaining wall is intended to prevent further erosion of the property in order to protect the existing Kahana Sunset structures. The *Geoanalytical Report* (Weidig, 2006) concludes "that the sandy soils beneath the walls are amenable to stabilization and erosion protection by means of cementitious grout placement or injection with high-density, polyurethane foam" (p. 6). These measures will help to protect against future erosion that could undermine the walls. In the vicinity of the proposed replacement seawall, the existing topography of the property will be modified somewhat, but the rest of the property is expected to remain relatively the same.

5. Flood and Tsunami Zone

According to the United States Federal Emergency Management Agency (FEMA) FIRM Panel No. 1500030264E, dated September 25, 2009, the project site is situated in flood zones VE, AE, and X. Description as follows:

Zone	Definition
VE	1% annual chance flood (100-year flood). Coastal flood zone with velocity Base Floor Elevation (BFE) determined.
AE	1% annual chance flood (100-year flood). (BFE) determined.
X	Areas determined to be outside the 0.2% annual chance floodplain.

The BFE for both the VE and AE zones is 17 feet (**See**: Figure No. 7, "Flood Insurance Rate Map").

Potential Impacts and Mitigation Measures. The site of the proposed retaining walls appears to be located in Flood AE, with a BFE of 17 feet. The proposed actions are not anticipated to have any adverse effects with respect to flooding since no habitable structures are being constructed. The proposed seawall will be engineered to withstand the calculated forces, thus reducing the likelihood that an extreme event would damage the structure. The proposed project should not be affected by or have adverse impacts upon its neighbors with regards to flood hazard potential since drainage patterns are not expected to change significantly. See Section III.D.3 for a discussion on drainage.

6. Terrestrial Biota (Flora and Fauna)

Existing Conditions. No wetlands are present on or around the subject property. Existing vegetation on the property is primarily grasses and native and non-native trees and shrubs, largely consisting of landscape planting such as mango, banana, shower, plumeria, papaya, citrus, ti, croton, hibiscus, bougainvillea, naupaka, fern, and ornamental palms. Avifauna typically found in the area includes the common mynah, several species of dove, cardinal, house finch, and house sparrow. Mammals common to this area include cats, dogs, rats, mice, and mongoose. No known rare, endangered, or threatened species of flora or fauna were observed on the subject property.

Potential Impacts and Mitigation Measures. There are no known significant habitats of rare, endangered or threatened species of flora and fauna located on the subject property. Thus, rare, endangered, or threatened species of flora and fauna will not be impacted by the proposed project.

7. Air Quality

Existing Conditions. Air quality refers to the presence or absence of pollutants in the atmosphere. It is the combined result of the natural background and emissions from many pollution sources. The impact of land development activities on air quality in a proposed development's locale differs by project phase (site preparation, construction, occupancy) and project type. In general, air quality in West Maui is considered relatively good. Non-point source emissions (automobile) are not significant to generate a high concentration of pollutants. The relatively high quality of air can also be attributed to the region's exposure to wind, which quickly disperses concentrations of emissions. West Maui is currently in attainment of all pollutant criteria established by the Clean Air Act, as well as the State of Hawaii Air Quality Standards.

Potential Impacts and Mitigation Measures. Air quality impacts attributed to the proposed project could include dust generated by the short-term construction related activities. Site work such as grading and building construction, for example, could generate airborne particulate. Adequate dust control measures that comply with the provisions of Hawaii Administrative Rules, Chapter 11-60.1, "Air Pollution Control," Section 11-60.1-33, Fugitive Dust, will be implemented during all phases of construction. Some of these measures will include:

- Providing an adequate water source on site prior to start-up of construction activities.
- Landscape planting and rapid covering of bare areas, including slopes, beginning with the initial grading phase.
- Controlling of dust from shoulders, project entrances, and access roads.
- Providing adequate dust control measures during weekends, after hours, and prior to daily start-up of construction activities.
- Controlling of dust from debris hauled away from project site.

In the long term, the proposed project is not expected to significantly increase the volume of traffic in the region, which would increase vehicular emissions such as carbon monoxide. Thus, the proposed project is not anticipated to be detrimental to local air quality.

8. Noise Characteristics

Existing Conditions. The noise level is an important indicator of environmental quality. In an urban environment, noise is due primarily to vehicular traffic, air traffic, heavy machinery, and heating, ventilation, and air-conditioning equipment. Ramifications of various sound levels and types may impact health conditions and an area's aesthetic appeal. Noise levels in the vicinity of the project area are generally low. Traffic noise from Lower Honoapiilani Road and noise associated with the residential uses nearby are the predominant sources of background noise in the vicinity of the subject property.

Potential Impacts and Mitigation Measures. In the short-term, the proposed project could generate some adverse impacts during construction. Noise from heavy construction equipment, such as material-carrying trucks and trailers, would be the dominant source of noise during the construction period. To minimize construction related impacts to the surrounding neighbors, the developer will limit construction activities to normal daylight hours, and adhere to the Department of Health's Administrative Rules, Chapter 11-46, "Community Noise Control". Kahana Sunset House Rules also limit work hours on the property. In the longer-term, the proposed project is not expected to impact existing noise conditions in the area.

9. Archaeological/Historical Resources

Existing Conditions. This parcel has been used as a condominium resort for the past 41 years. Before that it was owned by the Yabui family who resided there since the 1940s. The *Cultural Impact Assessment* (CIA) prepared for the project in March 2012

by Ms. Jill Engledow (**See:** Appendix "H"), notes that prior to that, the property was owned by a Chinese merchant who returned to China after selling to the Yabui family. Although historical evidence indicates that the area was sparsely populated, the bay was a popular fishing site.

An *Archaeological Monitoring Plan* (AMP) was prepared for the project in March 2012 by Archaeological Services Hawaii, Inc. (**See:** Appendix "I"). The *AMP* was accepted by the State Historic Preservation Division (SHPD) by a letter dated May 7, 2012. The *AMP* will be implemented to identify and prevent damage to any discovered archaeological or cultural remains or sites on the property.

Potential Impacts and Mitigation Measures. The *AMP* (ASH, 2012) prepared for the project recognizes that although there is likelihood of negative findings due to grading and construction, "… subsurface pre-Contact burials, remnant traditional cultural layers, historic refuse deposits, and buried architecture from both pre-Contact and historic periods may be extant …" (p. 2). Therefore, ground disturbing activities will be monitored according to the AMP.

The proposed project is therefore not anticipated to have any impact on significant cultural and historic properties.

10. Visual Resources

Existing Conditions. The subject property is situated along the makai side of Lower Honoapiilani Road within a residential area of Napili. The parcel maintains a total of approximately 763 feet of frontage along Lower Honoapiilani Road and has an average lot depth of approximately 918 feet. The approximately 465 foot *makai* boundary of the property abuts the assumed shoreline.

Napili offers sweeping views of the Pacific Ocean, Lanai, and Molokai. Public views of these resources exist in various locations from Lower Honoapiilani Road and Honoapiilani Highway. Numerous scenic resources have been identified in the Napili area, which are identified and discussed in the Maui Scenic Coastal Resources Study, August 1990 (**See**: Figure No. 14, "Coastal Scenic Resources Map"). The resource/inventory map in this report identifies a "noteworthy" view of the island of Molokai from Honoapiilani Highway just north of the proposed project site. A "noteworthy" view "suggests a scene that is significant but not distinctive in its visual impact" (p. 4-3). The ocean is currently partially visible from Lower Honoapiilani Road fronting the subject property (**See:** Figure No. 9.1 "Site Photographs").

Potential Impacts and Mitigation Measures. Since the proposed seawall will be at about 8 feet to 15 feet AMSL and the drain line is underground, the view through the subject property will be relatively unchanged. The topography of the site in relation to Lower Honoapiilani Road offers limited *makai* views through the site from the road, which will be preserved. Due to the distance to Honoapiilani Highway and difference in elevation, the "noteworthy" view will not be impacted. As such, the proposed project is not anticipated to significantly impact public view corridors, or the visual character of the site and its immediate environs.

B. SOCIO-ECONOMIC ENVIRONMENT

1. Population and Housing

Existing Conditions. The population of the County of Maui has exhibited relatively strong growth over the past decade with a 2010 population of 154,834, a 20.9% increase over 2000 population of 128,094. The 2010 population of the Lahaina Region was 21,514, or 13.9% of Maui County's population (U.S. Census Bureau, Census 2010). Maui Island is expected to increase to 162,370 in 2020 and to 186,254 in 2030 (14.7% increase). Lahaina Region is expected to increase to 25,171 in 2020 (15.5% of Maui Island) and to 28,870 in 2030.

Potential Impacts and Mitigation Measures. The proposed project will not lead to a direct impact on population levels since it is an existing residential condominium and no new units are proposed.

2. Economy

Existing Conditions. Like most of the population centers of Maui, the Lahaina economy was once based primarily upon the agricultural industry with the establishment of sugar mills in the 1800s. The closure of the Pioneer Sugar Mill in 1999 symbolized the final demise of large scale agriculture in the community. Today, tourism is the predominant industry. Also in the economic mix are small professional offices (financial, medical, legal), specialty retail (clothing, jewelry, book, antique), and ethnic restaurants.

Potential Impacts and Mitigation Measures. On a short-term basis, the project will support construction and construction-related employment. In the long term, the improvements will enhance an existing resort property which helps to sustain the visitor industry.

3. Cultural Resources

Existing Conditions. A *Cultural Impact Analysis* (CIA) was prepared by Ms. Jill Engledow (March 2012) for the project site (**See**: Appendix "H"). The CIA identifies the *ahupua'a* as Alaeloa, an area noted as a place known for its red soil and bountiful fishing, and a place where many battles were fought in precontact times.

Potential Impacts and Mitigation Measures. The *CIA* did not identify any cultural resources, i.e. medicinal plants, shoreline resources, religious sites that will be impacted by the project. Nor are there cultural sites in the immediate vicinity of the subject property that require access through the property. From a cultural practices and beliefs perspective, the subject property bears no apparent signs of cultural practices or gatherings taking place on the subject property or in the immediate vicinity of the subject property.

The *CIA* notes that:

> *… the proposed action does not interfere with any known Hawaiian or non-Hawaiian gathering, practices, protocols or access. Because this section of coastline has long been developed, with little provision made for beach access when it was built up decades ago, there is essentially no public access to this beach area except from the sea. Rather than a cultural issue, the proposed action is instead an environmental issue, and decisions about the impact of that action are more properly addressed by experts on the health of the shoreline and the ocean.*

Kahana Sunset is working cooperatively with the State Department of Land and Natural Resources (DLNR) and the County Planning Department to seek solutions for public access to the shoreline.

C. PUBLIC SERVICES

Potential Impacts and Mitigation Measures. Due to its location within an existing developed area, connections to existing infrastructure, and limited scope, the proposed project will not extend the limits of existing public services (recreational facilities, police and fire protection, schools, medical facilities and solid waste); therefore, the impact on public services will be minimal.

D. INFRASTRUCTURE

In April 2012, Marc M. Siah & Associates, Inc. prepared The *Preliminary Engineering Report for Kahana Sunset Condominium* (PER) which analyzes the project's off-site and on-site infrastructure systems (**See**: Appendix "J").

1. Water

The Maui Department of Water Supply (DWS) provides public water service for the West Maui region. In addition to the County, private water utilities such as the Kapalua Water Company and the Hawaii Water Service Company provide domestic water service for the Kapalua Resort and Kaanapali Resort, respectively. Domestic water and fire flow for the proposed project is provided by the County water system.

The project area is served by 8-inch and 12-inch County waterlines on Lower Honoapiilani Road. The subject property is presently serviced by a 1-1/2 inch water meter with a capacity of 100 gpm. Fire protection is provided by two (2) existing fire hydrants on Lower Honoapiilani Road.

Potential Impacts and Mitigation Measures. The proposed actions are not anticipated to increase potable water demand. As such, the proposed actions will not have any impact on potable water resources.

2. Sewer

An existing 18-inch sewerline, part of the County's Napili-Honokowai wastewater transmission system, runs along Lower Honoapiilani Road. Wastewater collected from the area is transported to the Lahaina Wastewater Reclamation facility located approximately 2¾ miles south of the project site. The *PER* (M. Siah, 2012) describes the property's sewer system thusly:

> *Wastewater system at Kahana Sunset has undergone major modifications and reconstruction since the inception of the development. Originally, the sewage collection and disposal system consisted of individual "Cavitette" wastewater treatment and disposal dry wells for each building.* (p. 3-4)
>
> *Sometime in the 80s, this wastewater treatment system was abandoned on-site. The new system connects the existing 4-inch sewer laterals collecting wastewater from each building, to new sewer laterals which extend to a wet well and pumping station located in the central open yard adjacent to the pool.* (p. 3-5)

Potential Impacts and Mitigation Measures. Based upon wastewater flow standards, the estimated wastewater flow from the existing complex is approximately 21,000 gallons per day. The proposed actions will not create additional demand. As such, the existing flow is expected to remain the same and no impacts to the public wastewater system are anticipated.

3. Drainage

The *Preliminary Drainage Report for Kahana Sunset Condominium* (PDR) was prepare by Marc M. Siah & Associates, Inc. in April 2012 (**See**: Appendix "K"). In the report, the existing drainage system is described as follows:

> *The existing drainage infrastructure on the property consists of drain lines of various sizes, drain inlets, drywells, storm drain manholes, and cobble-lined drainage channels which are located at strategic locations throughout the development to intercept, collect, and convey storm runoff by means of a 36-inch outfall and several other smaller drainage pipes into the Keonenui Bay.* (Sec. 2.5 ,p. 5)

The *PDR* summarizes the existing storm water flows as follows:

> *… total storm runoff generated on-site is calculated at 11.53 cfs. In addition to this flow, extraneous off-site flows entering the Kahana Sunset storm drain infrastructure include 9.12 cfs from County's L. Honoapiilani Road Right-of-Way, and unspecified quantity from the Napili Villas and mauka properties. In an agreement between the County and Kahana Sunset AOAO, this quantity has been agreed to a maximum of 44 cfs as dictated by the capacity of the existing 24-inch culvert. In other words, the total off-site storm runoff entering into the Kahana Sunset drainage system can reach as high as 53.12 cfs. The total combined potential runoff from the Kahana Sunset, including off-site flow, discharging into the Keonenui Bay via the existing 36-inch outfall is 64.65 cfs.* (Sec. 3.3.2 , pp. 9 - 11)

Based upon the preliminary drainage calculations, the proposed project is anticipated to decrease the existing runoff rate for a 10-year storm from 11.53 cfs to 11.35 cfs (*PDR*, M. Siah, 2012, Sec. 3.3.3, p 14). The 0.18 cfs decrease in runoff is due primarily to the expansion of the beach area and reduction of impervious surfaces. Maui County's proposed drainage improvements along Lower Honoapiilani Road may decrease the amount of surface and subsurface storm water entering the Kahana Sunset property.

Potential Impacts and Mitigation Measures. The *PDR* (M. Siah, 2012) recommends several improvements to the existing onsite drainage system, some of which would be located wholly or partially within the shoreline setback (**See**: Figure No. 11 "Existing Drainage System Plan").

The entire length of Existing Storm Drainline (ESD) No. 5, a 300-foot long 36-inch corrugated metal pipe, is proposed to be replaced. Also, Open Channel No. 2 will be replaced by an inlet and a subsurface drainline connecting to ESD No. 5. This inlet and Inlets Nos. 1 & 2 will be retrofitted with filters to prevent the entry of pollutants.

As a temporary stop-gap measure, the *PDR* also recommends a sand bag barricade or a intercepting ditch along the roadway shoulder in order to protect the property from "localized erosion due to unimpeded stray overland flow of roadway storm runoff …" (Sec. 4.2, p. 4). Filtration at Inlet Nos. 1 & 2 will remove sediments and pollutants from storm water and improve the quality of outflows to the ocean. While Kahana Sunset cannot control off-site storm water flows, the proposed improvements will reduce and improve storm water generated onsite. If it is determined that a National Pollutant Discharge Elimination System (NPDES) permit is required, one will be obtained by the contractor. An Erosion Control Plan will provide specific measures to mitigate erosion during construction. As such, drainage impacts are mitigated to the maximum extent by measures under the control of Kahana Sunset.

4. Roadway

Lower Honoapiilani Road, which provides access to the project site, is a two-lane, paved county roadway providing access for local traffic to properties in Napili and Kahana. It begins at its intersection with Honoapiilani Highway near Honokowai Stream in Kaanapali, and continues to its terminus in the Resort Community of Kapalua.

Potential Impacts and Mitigation Measures. Since the proposed project does not increase density or the number of units, no impacts to traffic are anticipated. Therefore, there are no significant impacts to Lower Honoapiilani Road and other roadways in the vicinity.

5. Electrical, Telephone, Cable and Data Systems

Existing electrical, telephone, cable and data systems serve the project and other properties in the vicinity. No increase in demand on these systems is expected, and therefore no significant impact is anticipated

IV. RELATIONSHIP TO GOVERNMENTAL PLANS, POLICIES, AND CONTROLS

A. STATE LAND USE LAW

Chapter 205, Hawaii Revised Statutes, relating to the Land Use Commission, establishes four major land use districts into which all lands in the State are placed. These districts are designated Urban, Rural, Agricultural, and Conservation. The subject property is within the Urban District. The proposed project is permitted within the Urban District.

B. COUNTY OF MAUI 2030 GENERAL PLAN

The 2030 update to the General Plan of the County of Maui is currently under review by the Maui County Council. The Countywide Policy Plan was adopted by the Maui County Council on March 19, 2010 and provides a long-term vision, principles, goals, policies, and objectives directed toward improving living conditions in the County. The following Themes, Objectives and Policies are applicable to the proposed project:

A. Protect the Natural Environment

Goal:	***Maui County's natural environment and distinctive open spaces will be preserved, managed, and cared for in perpetuity.***
Objective:	
3.	***Improve the stewardship of the natural environment.***
Policies:	
c.	*Evaluate development to assess potential short-term and long-term impacts on land, air, aquatic, and marine environments.*
h.	*Provide public access to beaches and shorelines for recreational and cultural purposes where appropriate.*

Analysis. This environmental assessment analyzes the proposed actions in the context of the natural environment. The proposed improvements have been designed to minimize any negative short-term or long-term impacts on land, air, aquatic, or marine environments. The applicant is working cooperatively with the State Department of Land and Natural Resources (DLNR) and the County Planning

Department to seek solutions to provide public access to the beach fronting Kahana Sunset.

F. Strengthen the Local Economy

Goal:	***Maui County's economy will be diverse, sustainable, and supportive of community values.***
Objective:	
1.	***Promote an economic climate that will encourage diversification of the County's economic base and a sustainable rate of economic growth.***
Policies:	
d.	*Support and promote locally produced products and locally owned operations and businesses that benefit local communities and local demand.*
Objective:	
3.	***Support a visitor industry that respects the resident culture and the environment.***
Policies:	
d.	*Support the renovation and enhancement of existing visitor facilities.*

Analysis: In the short-term, the proposed action will provide construction-related opportunities for local businesses. The proposed actions have the effect of protecting and enhancing an existing visitor facility. In the long-term, the continued operation of an improved visitor destination indirectly supports visitor-related businesses.

G. Improve Parks and Public Facilities

Goal:	***A full range of island-appropriate public facilities and recreational opportunities will be provided to improve the quality of life for residents and visitors.***
Objective:	
1.	***Expand access to recreational opportunities and community facilities to meet the present and future needs of residents of all ages and physical ablities***
Policies:	
d.	*Protect, enhance, and expand access to public shoreline and mountain resources.*

Analysis. The applicant is working cooperatively with the State Department of Land and Natural Resources (DLNR) and the County Planning Department to seek solutions to provide public access to the beach fronting Kahana Sunset.

J. Promote Sustainable Land Use and Growth Management

Goal:	***Community character, lifestyles, economies, and natural assets will be preserved by managing growth and using land in a sustainable manner.***
Objective:	
1.	***Improve land use management and implement a directed-growth strategy.***
Policies:	
b.	*Direct urban and rural growth to designated areas.*
Objective:	
4.	***Improve and increase efficiency in land use planning and management.***
Policies:	
b.	*Ensure that new development projects requiring discretionary permits demonstrate a community need, show consistency with the General Plan, and provide an analysis of impacts.*

Analysis: This parcel has been used as a condominium resort for the past 41 years. Before that it was owned by the Yabui family who resided there since the 1940s. The Cultural Impact Assessment notes that prior to that, the property was owned by a Chinese merchant who returned to China after selling to the Yabui family. The area is within the Urban Growth Boundary of the *Draft Maui Island Plan* of the County's *2030 General Plan Update* (May 2010). This report provides an analysis of the potential impacts of the subject project.

C. DRAFT MAUI ISLAND PLAN

The 2030 update to the General Plan of the County of Maui is currently under review by the Maui County Council. The Maui Island Plan will be ultimately used to determine the appropriateness of discretionary development proposals. The following Goals, Objectives and Policies of the December 2009 Draft Maui Island Plan are applicable to the proposed project:

POPULATION

Goal:	
1.1	***Maui's people, values, and lifestyles will thrive through strong, healthy, and vibrant island communities.***
Objective:	
1.1.1	***Greater retention of island residents by providing viable work, education, and lifestyle options.***

Policies:

1.1.1.b *Expand housing, transportation, employment, and social opportunities to ensure residents are able to comfortably age within their communities.*

Objective: *Maximize residents' benefits from the visitor industry, as measured by the percentage of residents earning a living wage, and ease the transition of new residents onto the island.*

Analysis. The proposed project is providing opportunities for employment in the short-term (construction related). The proposed actions have the effect of protecting and enhancing an existing visitor facility, indirectly supporting visitor-related businesses.

HERITAGE RESOURCES

Cultural, Historic, & Archaeological Resources

Goal:

2.1 ***An island that respects and protects archaeological and cultural resources while perpetuating diverse cultural identities and traditions.***

Objective:

2.1.3 ***Enhance the island's historic, archaeological, and cultural resources.***

Analysis. The proposed project is not located within any designated historic district. The Archaeological Monitoring Plan (AMP) (**See**: Appendix "I") prepared for the project (ASH, 2012) recognizes that although there is likelihood of negative findings due to grading and construction, "subsurface pre-Contact burials, remnant traditional cultural layers, historic refuse deposits, and buried architecture from both pre-Contact and historic periods may be extant." Therefore, ground disturbing activities will be monitored according to the *AMP*.

LAND USE

Urban Areas

Goal:

7.3 ***Maui will have livable human scale urban communities, and efficient and sustainable land use patter, and sufficient housing and services for Maui residents.***

Objective:

7.3.4 ***Seek to manage the impact of tourism on residents' qualities of life.***

Policies:

7.3.4.c *B. Manage transient rentals through permitting in accordance with adopted regulations and community plan policies.*

Analysis. The existing condominium-transient vacation rental use is authorized by the variance granted in 1968. Kahana Sunset wishes to bring the use into conformity by seeking a Community Plan Amendment and Change in Zoning.

D. WEST MAUI COMMUNITY PLAN

Nine community plan regions have been established in Maui County. Each region's growth and development is guided by a community plan, which contains objectives and policies in accordance with the Maui County General Plan. The purpose of the community plan is to outline a relatively detailed agenda for carrying out these objectives.

The subject property is located within the West Maui Community Plan area and has a SF Single Family designation (**See**: No. 5, "West Maui Community Plan"). The West Maui Community Plan was adopted by ordinance No. 2476 on February 27, 1996. The applicant is requesting a Community Plan Amendment to change the designation from *SF Single Family Residential* to *H Hotel*. This Draft Environmental Assessment examines any impacts this amendment might have on the immediate area.

The following West Maui Community Plan goals, objectives, and policies are applicable to the proposed action:

Goal: ***Land Use.*** *An attractive, well-planned community with a mixture of compatible land uses in appropriate areas to accommodate the future needs of residents and visitors in a manner that provides for the stable social and economic well-being of residents and the preservation and enhancement of the region's open space.*

Analysis. The project site is community planned for single family residential use. The property was granted a variance for the "Construction of an Apartment Building with Accessory Uses". The project is low rise (3-stories or less) and is compatible with the scale of surrounding properties. The Applicant does not intend to introduce new uses on the property. Infrastructure in the area is adequate and the existing use is consistent with land use objectives.

Goal: ***Environment.*** *A clean and attractive physical, natural and marine environment in which man-made developments on or alterations to the natural and marine environment are based on sound environmental and ecological practices, and*

important scenic and open space resources are preserved and protected for public use and enjoyment.

Objectives and Policies:

1. *Protect the quality of nearshore and offshore waters. Monitor outfall systems, streams and drainage ways and maintain water quality standards. Continue to investigate, and implement appropriate measures to mitigate, excessive growth and proliferation of algae in nearshore and offshore waters.*

11. *Prohibit the construction of vertical seawalls and revetments except as may be permitted by rules adopted by the Maui Planning Commission governing the issuance of Shoreline Area Management (SMA) emergency permits, and encourage beach nourishment by building dunes and adding sand as a sustainable alternative.*

Planning Standards:

6. Environmental Aspects

c. Prohibit the construction of vertical seawalls, except as approved by the Planning Commission of the County of Maui

Analysis: In consideration of the alternatives, the proposed action (constructing approximately 125 feet of seawall) was judged to be the most practical alternative. The seawall is for the protection and the safety of habitable structures and will be constructed in accordance with the SMA Rules of the Maui Planning Commission.

As described in Sections II and III of this report, the proposed wall is a long-term solution to address an impending public safety hazard as well as a physical hazard to structures on the subject property and adjacent properties. The project will also help protect the quality of nearshore waters as recommended by the West Maui Community Plan by aiding in the prevention of earthen soils from being eroded and transported to the coastal waters via wave action and runoff from *mauka* portions of the site.

Inlet Nos. 1 & 2 on the Kahana Sunset property will utilize filters to improve the quality of onsite generated stormwater that outfalls at the shoreline. The filters will remove sediment and pollutants from stormwater before it enters the existing drainage system and will help to reduce contamination of the marine environment.

E. MAUI COUNTY ZONING

The subject property is situated within the County of Maui's R-3 Residential District (**See**: Figure No. 6, "County Zoning Map"). The applicant is requesting a Change in Zoning (CIZ) from R-3 Residential District to H-M Hotel District. A request for a CIZ must meet the following criteria as found in MCC § 19.510.040.4:

1. *The proposed request meets the intent of the general plan and objectives and policies of the community plans of the county;*

***Analysis*:** As described in Section IV, subsection C and D, the proposed action meets the intent of the General Plan and the objectives and policies of the West Maui Community Plan.

2. *The proposed request is consistent with the applicable community plan land use map of the county;*

***Analysis*:** The West Maui Community Plan, adopted in 1996 by ordinance, identifies a portion of the subject parcel as Single Family Residential. The applicant is concurrently requesting a Community Plan Amendment (CPA) in order to establish consistency between the existing use and the proposed Hotel designation. With the granting of the CPA, the proposed rezoning of this property will be consistent with the Community Plan Land Use Map.

3. *The proposed request meets the intent and purpose of the district being requested;*

***Analysis*:** Pursuant to MCC Chapter 19.14, the Hotel District is described as follows:

> *A hotel district is a high density multiple-family area bordering business districts and ocean fronts. This district includes public and semi-public institutional and accessory uses. This district is basically residential in character and, as such, should not be spotted with commercial enterprises.*

The proposed Change in Zoning accomplishes this objective and will allow for a land use that is in character with the existing residential and multi-family urban uses of the area. Additionally, with the approval of the CPA request, the proposed zoning will conform to the County General Plan and creates consistency with the Community Plan land use designation.

4. *The application, if granted, would not adversely affect or interfere with public or private schools, parks, playgrounds, water systems, sewage and solid waste*

disposal, drainage, roadway and transportation systems, or other public requirements, conveniences and improvements.

***Analysis*:** Since the project is an existing use and there are no plans to increase density, the proposed Change in Zoning will not significantly impact schools, parks, playgrounds, water systems, sewage and solid waste disposal, drainage, traffic, or other public infrastructure and services. Details are discussed in Section III, Items C and D,

5. *The application, if granted would not adversely impact the social, cultural, economic, environmental, and ecological character and quality of the surrounding area.*

***Analysis*: S**ince the project is an existing use and there are no plans to increase density, the proposed action will not adversely impact the social, cultural, economic, environmental, and ecological character and quality of the surrounding area. Details are discussed in Section III.

6. *If the application change in zoning involves the establishment of an agricultural district with a minimum lot size of two acres, an agricultural feasibility study shall be required and reviewed by the Department of Agriculture and the U.S. Soil Conservation Service.*

***Analysis*:** Not Applicable.

F. MAUI COUNTY SHORELINE RULES

Chapter 205A, Hawaii Revised Statutes (HRS), and Title MC-12, Subtitle 02, Chapter 203, *Shoreline Rules for the Maui Planning Commission*, sets forth the requirements for structures and activities taking place within the Shoreline Setback Area (SSA). the Shoreline Setback Area is defined in Subchapter 1, §12-203-4, thusly:

… means "shoreline area" as defined in HRS chapter 205A, as amended, which includes all of the land area between the shoreline and the shoreline setback line, …

The Shoreline Rules for the Maui Planning Commission, Subchapter 2, §12-203-12, "Permitted Structures and Activities Within the Shoreline Setback Area," lists specific structures and activities that are allowed within the SSA. Structures or activities that are prohibited may request a Shoreline Setback Variance (SSV).

Since the proposed replacement seawall and drainage system improvements are not on the "permitted" list, an SSV is requested and the justification is presented in Section VII.

V. SPECIAL MANAGEMENT AREA OBJECTIVES AND POLICIES

The subject project is located within the Special Management Area (SMA). As such, the proposed improvements require an SMA Use Permit. Pursuant to Chapter 205A, Hawaii Revised Statutes, and the Rules and Regulations of the Planning Commission of the County of Maui, projects located within the SMA are evaluated with respect to SMA objectives, policies, and guidelines. This section addresses the project's relationship to applicable coastal zone management considerations, as set forth in Chapter 205A and the Rules and Regulations of the Planning Commission.

A. RECREATIONAL RESOURCES

Objective: Provide coastal recreational resources accessible to the public.

Policies:

(A) Improve coordination and funding of coastal recreation planning and management; and

(B) Provide adequate, accessible, and diverse recreational opportunities in the coastal zone management area by:

(i) Protecting coastal resources uniquely suited for recreational activities that cannot be provided in other areas;

(ii) Requiring placement of coastal resources having significant recreational value, including but not limited to surfing sites, fishponds, and sand beaches, when such resources will be unavoidably damaged by development; or require reasonable monetary compensation to the state for recreation when replacement is not feasible or desirable;

(iii) Providing and managing adequate public access, consistent with conservation of natural resources, to and along shorelines with recreational value;

(iv) Providing an adequate supply of shoreline parks and other recreational facilities suitable for public recreation;

(v) Ensuring public recreational use of county, state, and federally owned or controlled shoreline lands and waters having standards and conservation of natural resources;

(vi) *Adopting water quality standards and regulating point and non-point sources of pollution to protect, and where feasible, restore the recreational value of coastal waters;*

(vii) *Developing new shoreline recreational opportunities, where appropriate, such as artificial lagoons, artificial beaches, and artificial reefs for surfing and fishing;*

(viii) *Encourage reasonable dedication of shoreline areas with recreational value for public use as part of discretionary approvals or permits by the land use commission, board of land and natural resources, county planning commissions; and crediting such dedication against the requirements of Section 46-6, HRS.*

Analysis. The project site abuts the shoreline; however, the proposed project will not have a direct impact on the public's use or access to the shoreline area. Public beach access exists at Hui Road E, approximately 500 feet to the south of the project site. The applicant is working cooperatively with the State Department of Land and Natural Resources (DLNR) and the County Planning Department to seek solutions to provide public access.

The subject parcel abuts Keonenui Bay, a small bay located between two rocky headlands. The entire length of the shoreline along the bay is armored with vertical seawalls. The project will enhance safety in the shoreline area immediately beneath the subject property and aid in protection of nearshore waters from erosion-borne sediment. Therefore, the improvement will not narrow the usable section of the beach and will not inhibit lateral access along the shoreline.

B. HISTORICAL/CULTURAL RESOURCES

Objective: Protect, preserve and, where desirable, restore those natural and manmade historic and prehistoric resources in the coastal zone management area that are significant in Hawaiian and American history and culture.

Policies:

(a) Identify and analyze significant archeological resources;

(b) Maximize information retention through preservation of remains and artifacts or salvage operations; and

(c) Support state goals for protection, restoration, interpretation, and display of historic structures.

Analysis. As discussed in Section III.A.9 above, an *Archaeological Monitoring Plan* (ASH, 2012) (**See**: Appendix "I") will be implemented to identify and prevent

damage to any discovered archaeological or cultural remains or sites on the property. A *Cultural Impact Assessment* (Engledow, 2012) (**See**: Appendix "H") identified no potential impacts to native Hawaiian cultural resources or practices as a result of the proposed project. Based on these findings, it is unlikely that the proposed actions will have a significant impact on historical or cultural resources.

C. SCENIC AND OPEN SPACE RESOURCES

Objective: Protect, preserve and, where desirable, restore or improve the quality of coastal scenic and open space resources.

Policies:

(a) Identify valued scenic resources in the coastal zone management area;

(b) Ensure that new developments are compatible with their visual environment by designing and locating such developments to minimize the alteration of natural landforms and existing public views to and along the shoreline;

(c) Preserve, maintain, and where desirable, improve and restore shoreline open space and scenic resources; and

(c) *Encourage those developments that are not coastal dependent to locate in inland areas.*

Analysis. As discussed in Section III.A.10 of this report, numerous scenic resources have been identified in the Napili area, which are identified and discussed in the Maui Coastal Scenic Resources Study, August 1990 (**See**: Figure No. 14, "Coastal Scenic Resources Map"). The resource/inventory map in this report identifies *makai* view of the island of Moloka'i as a "noteworthy" scenic resources in the immediate vicinity of the project site.

The proposed actions will not interfere with public views toward the ocean (**See:** Figures No. 9.1, "Site Photographs," and No. 14, "Coastal Scenic Resources Map"). The proposed seawall will utilize a similarly textured masonry facing to be consistent with the existing seawall fronting Building "F". The height of the proposed replacement wall will also match the height of the existing Building "F" seawall at its south end, gradually sloping upward to match the existing wall height at Building "A".

D. COASTAL ECOSYSTEMS

Objective: Protect valuable coastal ecosystems, including reefs, from disruption and minimize adverse impacts on all coastal ecosystems.

Policies:

(a) Improve the technical basis for natural resource management;

(b) Preserve valuable coastal ecosystems, including reefs, of significant biological or economic importance;

(c) Minimize disruption or degradation of coastal water ecosystems by effective regulation of stream diversions, channelization, and similar land and water uses, recognizing competing water needs; and

(d) Promote water quantity and quality planning and management practices which reflect the tolerance of fresh water and marine ecosystems and prohibit land and water uses which violate state water quality standards.

Analysis. The proposed project will protect the quality of the nearshore marine environment by preventing siltation from erosion of the sea cliff. In addition, onsite generated stormwater will be filtered at drainage Inlet Nos. 1 & 2 to limit the release of pollutants into coastal waters. Based upon existing development within the project area, it is unlikely that the proposed improvements will have a significant impact on coastal ecosystems.

E. ECONOMIC USES

Objective: Provide public or private facilities and improvements important to the State's economy in suitable locations.

Policies:

(a) Concentrate coastal dependent development in appropriate areas;

(b) Ensure that coastal dependent development such as harbors and ports, and coastal related development such as visitor facilities and energy generating facilities, are located, designed, and constructed to minimize adverse social, visual, and environmental impacts in the coastal zone management area;

(c) Direct the location and expansion of coastal dependent developments to areas presently designated and used for such development and permit reasonable long-term growth at such areas, and permit coastal dependent development outside of presently designated areas when:

(i) Use of presently designated locations is not feasible;

(ii) Adverse environmental impacts are minimized; and

(iii) The development is important to the State's economy.

Analysis. The existing condominium-resort use of the property is consistent with the State's urban land use designation. The proposed land use designations will bring conformity and consistency to the Maui County Zoning and West Maui Community Plan designations. As such, the proposed project is within an area that has an existing condominium-resort use with adequate supporting infrastructure and services.

The proposed wall will stabilize the erosion prone shoreline at the subject property, leading to both public benefits and private benefits to the applicant and neighboring landowners. Public benefits will include the removal of a safety hazard, and prevention of soils entering coastal waters. Private benefits include greater site safety and the prevention of loss of property and structures.

F. COASTAL HAZARDS

Objective: Reduce hazard to life and property from tsunami, storm waves, stream flooding, erosion, subsidence and pollution.

Policies:

(a) Develop and communicate adequate information about storm wave, tsunami, flood, erosion, subsidence, and point and non-point source pollution hazards;
(b) Control development in areas subject to storm wave, tsunami, flood, erosion, subsidence, and point and non-point pollution hazards;
(c) Ensure that developments comply with requirements of the Federal Flood Insurance Program;
(d) Prevent coastal flooding from inland projects; and
(e) Develop a coastal point and nonpoint source pollution control program.

Analysis. The proposed action will protect the landward portion of the property and associated structures from erosion due to storm waves. Stabilization of the shoreline will provide greater site safety to other residents living along the shoreline. Shoreline stabilization will also protect the beach and nearshore waters from impacts related to eroded soils transported by wave action or inland runoff.

G. MANAGING DEVELOPMENT

Objective: Improve the development review process, communication, and public participation in the management of coastal resources hazards.

Policies:

(a) Use, implement, and enforce existing laws effectively to the maximum extent possible in managing present and future coastal zone development;

(b) Facilitate timely processing of applications for development permits and resolve overlapping of conflicting permit requirements; and

(c) Communicate the potential short and long-term impacts of proposed significant coastal developments early in their life-cycle and in terms understandable to the public to facilitate public participation in the planning process and review process.

Analysis. The development of the subject property is being conducted in accordance with applicable State and County requirements. Opportunity for review of the proposed action is provided through the County's Special Management Area (SMA) permitting process and the State's Environmental Assessment (EA) review process.

H. PUBLIC PARTICIPATION

Objective: Stimulate public awareness, education, and participation in coastal management.

Policies:

(a) Maintain a public advisory body to identify coastal management problems and to provide policy advise and assistance to the coastal zone management program.

(b) Disseminate information on coastal management issues by means of educational materials, published reports, staff contact, and public workshops for persons and organizations concerned with coastal-related issues, developments, and government activities; and

(c) Organize workshops, policy dialogues, and site-specific medications to respond to coastal issues and conflicts.

Analysis. Early Consultation was conducted with applicable government agencies, as well as with neighbors within 500 feet of the subject property, as part of the preparation of this Draft EA. (See: Appendix "A" "Summary of Public and Agency Consultation").

In conjunction with the submittal of the Special Management Area application, a notice of application will be mailed to property owners within 500 feet. The mail-out

describes the proposed project and solicits any issues or concerns that need to be addressed through the permitting process. A number of governmental agencies have also been consulted and copies of this application will be circulated to various agencies by the Department of Planning. During the scheduled public hearings, the public will have an opportunity to review and comment on the proposed project. Landowners located within 500 feet of the project will be notified of the scheduled public hearing dates. Public hearing dates and location maps will also be published in the Maui News on two separate occasions. The public will be allowed to participate in the public hearing portion of the Maui Planning Commission's review process. The Environmental Assessment process also provides an opportunity for public comment.

I. BEACH PROTECTION

Objective: Protect beaches for public use and recreation.
Policies:

(a) Locate new structures inland from the shoreline setback to conserve open space and to minimize loss of improvements due to erosion;

(b) Prohibit construction of private erosion-protection structures seaward of the shoreline, except when they result in improved aesthetic and engineering solutions to erosion at the sites and do not interfere with existing recreational and waterline activities; and

(c) Minimize the construction of public erosion-protection structures seaward of the shoreline.

Analysis. The project will involve the replacement and improvements to an existing seawall and drainage system, relocation of a gazebo and shower within the shoreline setback area; therefore, a Shoreline Setback Variance is required, which is the subject of Section VII of this report. The proposed seawall is an aesthetic and engineered solution which improves public safety and does not interfere with the public's use of the beach.

Some of the drainage system improvements will take place outside of the shoreline setback, calculated at 76.42 feet from the assumed shoreline. This portion of the proposed project is not anticipated to have a direct physical impact upon any public beaches.

J. MARINE RESOURCES

Objective: Implement the State's ocean resources management plan.

Policies:

(a) Exercise an overall conservation ethic, and practice stewardship in the protection, use, and development of marine and coastal resources;

(b) Assure that the use and development of marine and coastal resources are ecologically and environmentally sound and economically beneficial;

(c) Coordinate the management of marine and coastal resources and activities management to improve effectiveness and efficiency;

(d) Assert and articulate the interest of the state as a partner with federal agencies in the sound management of the ocean resources within the United States exclusive economic zone;

(e) Promote research, study, and understanding of ocean processes, marine life, and other ocean development activities relate to and impact upon the ocean and coastal resources; and

(f) Encourage research and development of new, innovative technologies for exploring, using, or protecting marine and coastal resources.

Analysis. The proposed project does not involve the direct use or development of marine resources. In addition, with the incorporation of erosion and drainage control measures during construction and after construction as identified in this report, there should not be significant adverse impacts to nearshore waters from point and non-point sources of pollution. Therefore, the subject project will not produce any significant impacts on any coastal or marine resources.

VI. ENVIRONMENTAL ASSESSMENT SIGNIFICANCE CRITERIA

Since the proposed project involves an action within the Shoreline Setback Area and a Community Plan Amendment, an Environmental Assessment is required by Chapter 343, Hawaii Revised Statutes (HRS). A finding of no significant impact (FONSI) is anticipated and therefore an Environmental Impact Statement (EIS) will not be required for the proposed action. In accordance with Title 11, Department of Health, Chapter 200 and Subchapter 6, §11-200-12, Environmental Impact Statement Rules, and based on the detailed analysis contained within this document, the following conclusions are supported.

1. **The proposed action will *not* result in an irrevocable commitment to loss or destruction of natural or cultural resources.**

   Analysis. As documented in this report, the proposed project will take appropriate mitigative measures to prevent the loss or destruction of any natural or cultural resource (**See**: Section III).

2. **The proposed action will *not* curtail the range of beneficial uses of the environment.**

   Analysis. The subject property is within the State's Urban District and is zoned and community planned to allow for single-family residential development. However, the existing condominium-hotel, built in 1971, obtained a variance for the existing use in 1968. There are no plans to expand this use; therefore, there are no significant impacts to environmental or natural resources on the property.

   The proposed replacement seawall and drainage improvements will enhance safety in the shoreline area immediately fronting the subject property, and will also aid in protection of nearshore waters from erosion-borne sediment. The proposed improvements will not narrow the area available for lateral access. Based upon existing development on neighboring properties, it is unlikely the improvements will result in a significant change to the coastal area. Thus, the proposed action will not curtail the range of beneficial uses of the environment.

3. **The proposed action will *not* conflict with State or County long-term environmental policies and goals as expressed in Chapter 344, HRS, and those which are more specifically outlined in the Conservation District Rules.**

   Analysis. The project is being developed in compliance with the State's long-term environmental goals. As documented in this report, appropriate mitigation measures will be implemented to minimize the potential for negative impacts to the environment, including near and off-shore coastal waters. The project will not have any impact on flora and fauna, and is not expected to have a negative impact on archaeological or cultural resources.

4. **The proposed action will *not* substantially affect the economic or social welfare and activities of the community, county or state.**

   Analysis. The proposed project will improve public safety in the immediate area. Short-term economic impacts will result from the increase in activity associated with the construction of the project. Because of the limited scope of this project, impacts on the socio-economic environment will be minimal (**See**: Section III.B).

5. **The proposed action will *not* substantially affect public health.**

   Analysis. There are no special or unique aspects of the project that will have a direct impact on public health.

6. **The proposed action will *not* result in substantial secondary impacts.**

   Analysis. The proposed project is not a population generator nor does it trigger any Maui County residential workforce housing requirements. Increased activity at the site during the construction phase may result in a marginal increase in traffic and associated noise and air pollution. However, as analyzed in Section III of this report, the increase in the level of these impacts is minimal and with the incorporation of mitigation measures will not substantially impact the environment.

   Based on existing development in the project vicinity, the proposed improvements are not expected to cause any secondary effects that would significantly impact the coastal area.

7. **The proposed action will *not* involve substantial degradation of environmental quality.**

Analysis. Mitigation measures will be implemented during the construction phase in order to minimize negative impacts on the environment, especially with regards to construction runoff. The design of the proposed project has incorporated mitigation measures to minimize impacts to nearshore water quality that could arise from an increase in runoff generated on the site as a result of the project (**See**: Section III.D.3 for a discussion of drainage). The proposed wall will prevent the erosion of earthen, silty soils and associated degradation of coastal waters. Other environmental resources such as endangered species of flora and fauna, air and water quality, and archeological resources will not be significantly impacted by the subject project.

8. **The proposed project will not produce cumulative impacts and does *not* have considerable effect upon the environment or involve a commitment for larger actions.**

   Analysis. The proposed project does not involve a commitment for larger action on behalf of the applicant or any public agency. The subject property is State and County zoned and community planned for urban development, and as such, is part of the planned future growth of the region. As described in this report, the project will not significantly impact public infrastructure and services including roadways, drainage facilities, water systems, sewers and educational facilities. In addition, the project is not anticipated to induce an overall significant increase in population growth and will therefore not produce considerable effect on the environment nor require a commitment for larger actions by governmental agencies.

   Armoring of a shoreline area is known to lead to successive armoring of adjacent shoreline areas, which creates a larger (cumulative) structure that can have greater impacts. As discussed above, most of the shoreline at Keonenui Bay is either naturally hardened or artificially armored with vertical reinforced concrete stone masonry seawalls. The natural wave action in the area is magnified and continues to erode the clay and ash substrate below the base of the unprotected natural walls of Keonenui Bay, threatening public safety and adding silt to the adjacent coastal waters. Given that total shoreline armoring exists, construction of the proposed replacement seawall will not encourage additional development or require a commitment for larger actions.

9. **The proposed project will *not* affect a rare, threatened, or endangered species, or its habitat.**

Analysis. As described in Section III.A.6 of this report, there are no rare, threatened, or endangered species of flora and fauna at the project site.

10. **The proposed action will *not* substantially or adversely affect air and water quality or ambient noise levels.**

    Analysis. As described in Section III of this report, there is a potential for negative impacts to air or water quality and ambient noise levels related to short-term construction activities. Air, noise and dust impacts will be mitigated through implementation of standard mitigation measures as identified previously in this report. It is not anticipated that there will be significant long-term impacts to air or water quality and ambient noise levels due to the operation phase of the development.

11. **The proposed action will *not* substantially affect or be subject to damage by being located in an environmentally sensitive area, such as flood plain, shoreline, tsunami zone, erosion-prone areas, estuary, fresh waters, geologically hazardous land or coastal waters.**

    Analysis. According to Panel No. 15003-0264E of the Flood Insurance Rate Map, September 25, 2009, prepared by the United States Federal Emergency Management Agency (FEMA), the project site is situated primarily in flood zone X, with portions of the subject property along the shoreline lying within Zones AE and VE. Zone AE represents areas of 100-year flood, with base flood elevations and flood hazard factors determined; Zone VE represents areas of 100-year coastal flood with velocity (wave action), with base flood elevations and flood hazard factors determined. The proposed improvements will be sited in Flood Zone AE (**See**: Figure No. 7, "Flood Insurance Rate Map"). The proposed replacement seawall will be engineered to withstand the design forces calculated by the structural and coastal engineers, thus reducing the likelihood that an extreme event would damage the structure. The proposed project therefore should not be affected by flood hazard, or have adverse impacts upon its neighbors with regards to flood hazard potential.

12. **The proposed action will *not* substantially affect scenic vistas or view planes identified in county or state plans or studies.**

    Analysis. As described in Section III.A.10 of this report, there will be no significant change in the project's overall effect on *mauka* or *makai* views from what exists currently, therefore the proposed project is not expected to have any significant adverse effects on visual resources. Figures Nos. 9.1 – 9.4, "Site Photographs," and

No. 10, "Concept Master Plan" document the project's potential impacts on visual resources.

13. The proposed action will not require substantial energy consumption

Analysis. It is not anticipated that any increase in energy consumption resulting from build-out of the project will be significant within the context of existing levels of power consumption or vehicular energy usage in the region, and on Maui.

VII. JUSTIFICATION FOR SHORELINE SETBACK VARIANCE

As set forth in the Shoreline Rules for the Maui Planning Commission, §12-203-2, "Purpose":

Due to competing demands for utilization and preservation of the beach and ocean resources, it is imperative:

(1) That use and enjoyment of the shoreline area be ensured for the public to the fullest extent possible;

The proposed project will not prevent the public from full use and enjoyment of the shoreline area to which it is already entitled.

(2) That the natural shoreline environment be preserved;

The shoreline area fronting the subject property is composed coralline beach sand, "overlying shreds of pelagic coral reef which in turn overlie basaltic lava flow …" (**See**: Appendix "G", "Geoanalytical Report", IGE, 2006, p. 3). A portion of the proposed replacement seawall is just landward of the assumed shoreline, then retreats approximately 30 feet *mauka.* All of drainage system improvements are *mauka* of the shoreline. Therefore the proposed project is not expected to alter the natural shoreline environment.

(3) That man-made features in the shoreline area be limited to features compatible with the shoreline area;

The proposed action involves the construction of a replacement seawall to armor the shoreline, which will connect to an adjacent shoreline armoring structure of similar design to the south and to the CRM structure to the north (**See**: Figures Nos. 9.1 – 9.4, "Site Photographs" and No. 10, "Concept Master Plan"). The adjacent shoreline armoring structures in turn adjoins a series of similar structures armoring the remaining shoreline along Keonenui Bay extending south to Haukoe Point and north to Alaeloa Point. The proposed action therefore does not include any new actions or features that are incompatible with the shoreline as it currently appears.

(4) That the natural movement of the shoreline be protected from development;

The proposed action involves the construction of a replacement seawall within the shoreline setback area as determined by the Average Lot Depth (ALD) method. As previously noted, the entire shoreline in Keonenui Bay is hardened either naturally or with artificial protective structures. The proposed project is therefore not expected to affect natural movement of the shoreline or other coastal processes in a manner different from existing conditions (**See:** Appendix "F", "Wave Climate Study").

(5) That the quality of scenic and open space resources be protected, preserved, and where desirable, restored; and

As discussed in Section III.A.10, the proposed project will not have a significant effect on the quality of scenic and open space resources. Since the site slopes from the *mauka* boundary at approximately 49 feet above mean sea level (AMSL) to approximately 8 feet AMSL at the *makai* boundary, and since the proposed replacement seawall and drainage system improvements do not impact existing *makai* views through the project site**,** the project will not interfere with public views to and along the shoreline. The proposed replacement seawall will be constructed in such a way as to transition into neighboring walls and minimize visual impacts when viewed from the *makai* side.

(6) That adequate public access to and along the shoreline be provided.

Public access to the shoreline exists approximately 500 feet to the south of the site. Kahana Sunset is continuing to work with the DLNR and the County to provide a practical solution for providing public access to the shoreline. The proposed project does not restrict public lateral access along the shoreline.

The variance request must meet §12-203-15 "Criteria for approval of a variance":

(a) A shoreline area variance may be granted for a structure or activity otherwise prohibited by this chapter, if the commission finds in writing, based on the record presented, that the proposed structure or activity is necessary for or ancillary to:

(4) Drainage;

(8) Private facilities or improvements which will neither adversely affect beach processes nor artificially fix the shoreline; provided that, the commission also

finds that hardship will result to the applicant if the facilities or improvements are not allowed within the shoreline area;

and:

(b) A structure or activity may be granted a variance upon grounds of hardship if:

(1) The applicant would be deprived of reasonable use of the land if required to fully comply with the shoreline setback rules;

The proposed actions include improvements to the existing onsite drainage system. The condition of the existing seawall, along with documentation of prior erosion at the site, indicates that if left unchecked, the existing seawall will eventually collapse and erosion will continue, eventually threatening habitable structures on the property. Kahana Sunset would eventually lose more of its central courtyard and would be deprived of its reasonable use.

(2) The applicant's proposal is due to unique circumstances and does not draw into question the reasonableness of the shoreline setback rules; and

The proposed project does not draw into question the reasonableness of the shoreline setback rules. The purpose of the proposed replacement seawall is to prevent future erosion of the property and potential undermining of the habitable structures; to prevent earthen soils from eroding and entering the coastal waters; and to remove the public hazard associated with the eventual collapse of the existing wall.

(3) The proposal is the practicable alternative which best conforms to the purpose of the shoreline setback rules.

As discussed in the above written justification for the requested variance, and in Section II.F of this document, the preferred alternative is the practicable option which best conforms to the purpose of the Shoreline Setback Rules.

VIII. FINDINGS AND CONCLUSIONS

This Draft Environmental Assessment examines the environmental and socio-economic impacts associated with the applicant's proposal to construct a replacement seawall to stabilize the shoreline and protect existing habitable structures, and to construct drainage system improvements. The applicant is also proposing a Community Plan Amendment (CPA) from Single Family to Hotel and a Change in Zoning (CIZ) from R-3 Residential to H-M Hotel. A Shoreline Setback Variance (SSV) is required since the proposed replacement seawall and a portion of the drainage system improvements will be within the Shoreline Setback Area. The project site has an area of 4.467 acres and is located in Alaeloa, Maui, Hawaii.

With the retreat of approximately 10 to 30 feet from the existing seawall location, the beach width will widened accordingly and it is anticipated that the proposed replacement seawall will not have a significant impact on the natural shoreline process. The proposed replacement seawall will also help to prevent eroded underlying soils from entering the ocean and the proposed drainage improvements will prevent sediments and pollutants contained in onsite generated storm waters from contaminating the ocean. As such, the proposed development is not anticipated to result in significant environmental impacts to surrounding properties, nearshore waters, natural resources, and/or archaeological and historic resources on the site or in the immediate area. Public infrastructure and services, including roadways, sewer and water systems, medical facilities, police and fire protection, parks, and schools are adequate to serve the project and are not anticipated to be impacted by the project. The proposed project is not anticipated to negatively impact public view corridors and is not anticipated to produce significant adverse impacts upon the visual character of the site and its immediate environs.

The subject property is situated within the State's Urban District and is County R-3 Residential and Community planned for Single-Family Residential. The proposed CPA and CIZ actions will bring the existing condominium-hotel use into conformity and consistency with State and County land use plans and policies, including Chapter 205A, HRS, as well as the West Maui Community Plan Land Use Map.

Based on the foregoing analysis and conclusion, the proposed project will not result in significant impacts to the environment, is consistent with the requirements of HRS Chapter 343, and a Finding of No Significant Impact (FONSI) is anticipated.

IX. REFERENCES

County of Maui, Department of Planning. 2010. *The Countywide Policy Plan, County of Maui 2030 General Plan.* Wailuku, Hawaii.

County of Maui, Department of Planning. 2010. *Draft Maui Island Plan.* Wailuku, Hawaii.

County of Maui, Department of Planning. 1996. *West Maui Community Plan.* Wailuku, Hawaii.

County of Maui, Office of Economic Development. 2009. *Maui County Data Book.* Wailuku, Hawaii.

Environmental Planning Associates. August 31, 1990. *Maui Coastal Scenic Resources Study.* Lahaina, Hawaii.

Federal Emergency Management Agency. Revised September 25, 2009. *Flood Insurance Rate Map.* Community Panel Map Number 1500030264E.

U.S. Department of Agriculture, Soil Conservation Service in Cooperation with the University of Hawaii, Agricultural Experiment Station. 1972. *Soil Survey of the Islands of Kauai, Oahu, Maui, Molokai, and Lanai, State of Hawaii.* Washington, D.C.

FIGURES

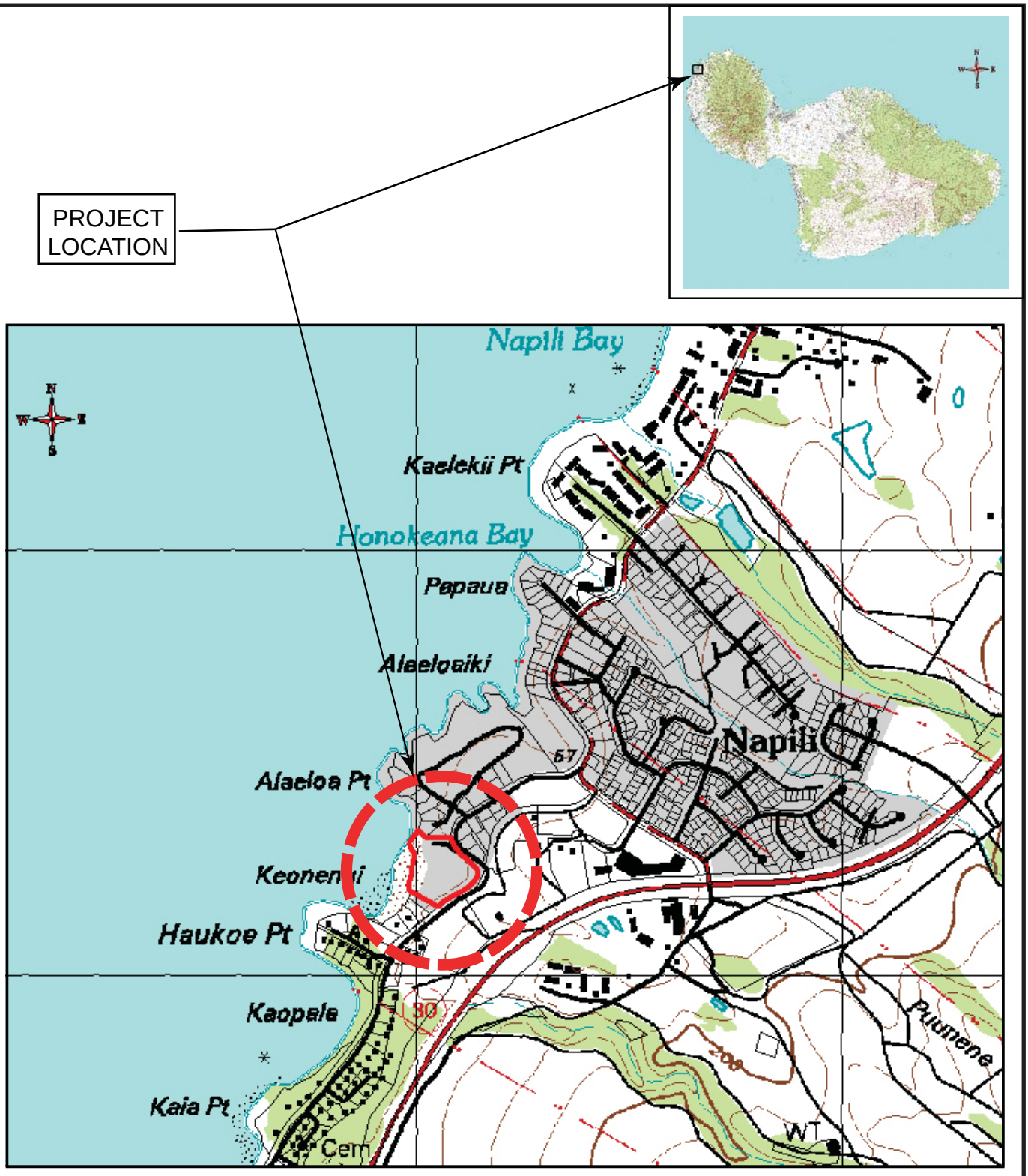

FIGURE 1

Not to Scale	JULY 2012
REGIONAL LOCATION	
KAHANA SUNSET	

CHRIS HART & PARTNERS, INC.

FIGURE 2

JULY
2012

AERIAL MAP

KAHANA SUNSET

Source: Google Earth, February 2012

CHRIS HART & PARTNERS, INC.

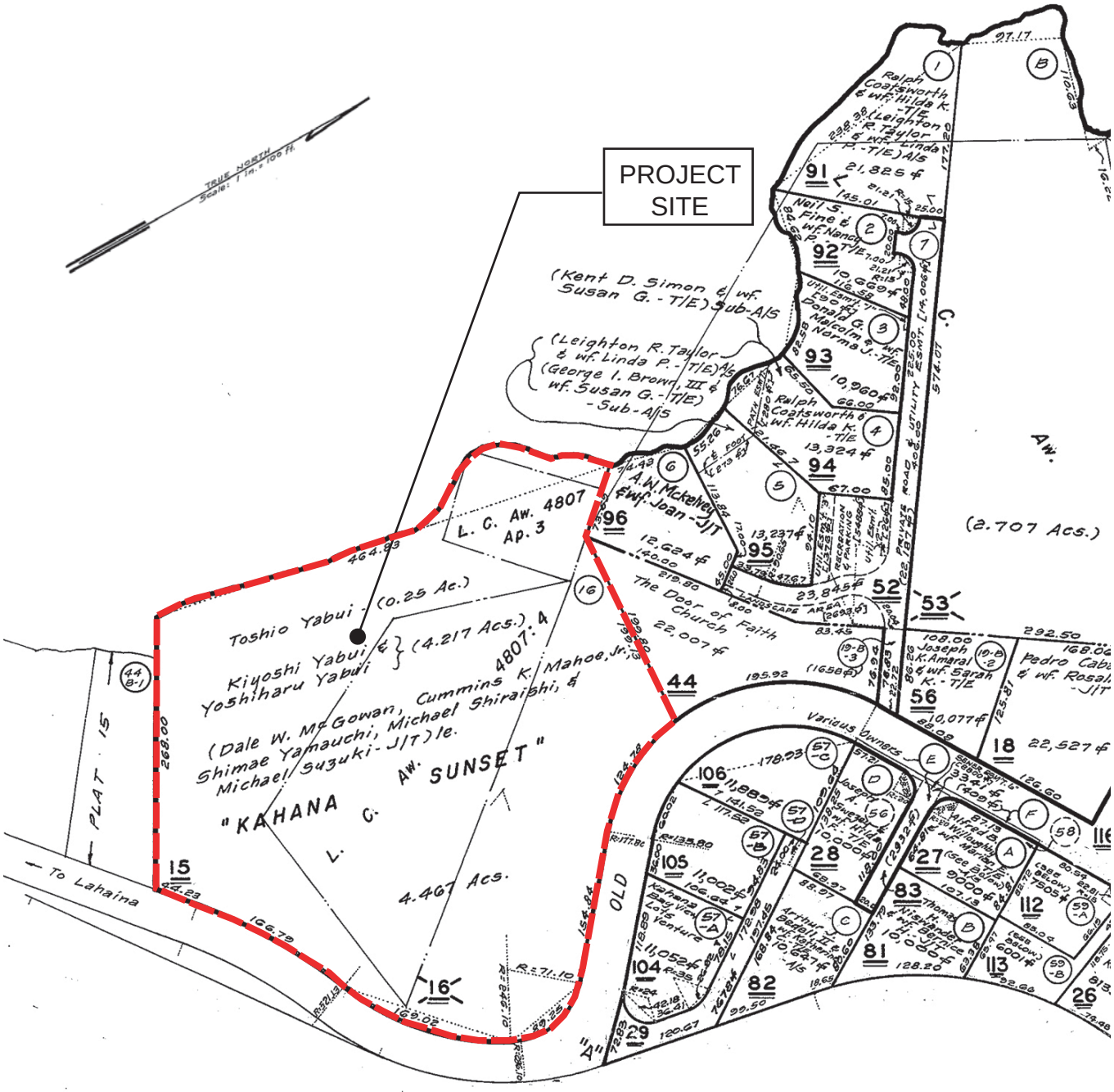

DEPARTMENT OF TAXATION PROPERTY TECHNICAL OFFICE TAX MAPS BRANCH STATE OF HAWAII TAX MAP		
SECOND TAXATION DISTRICT		
ZONE	SEC.	PLAT
4	3	03

FIGURE 3

Parcel 15
Not to Scale

JULY
2012

TAX MAP

KAHANA SUNSET

CHRIS HART & PARTNERS, INC.

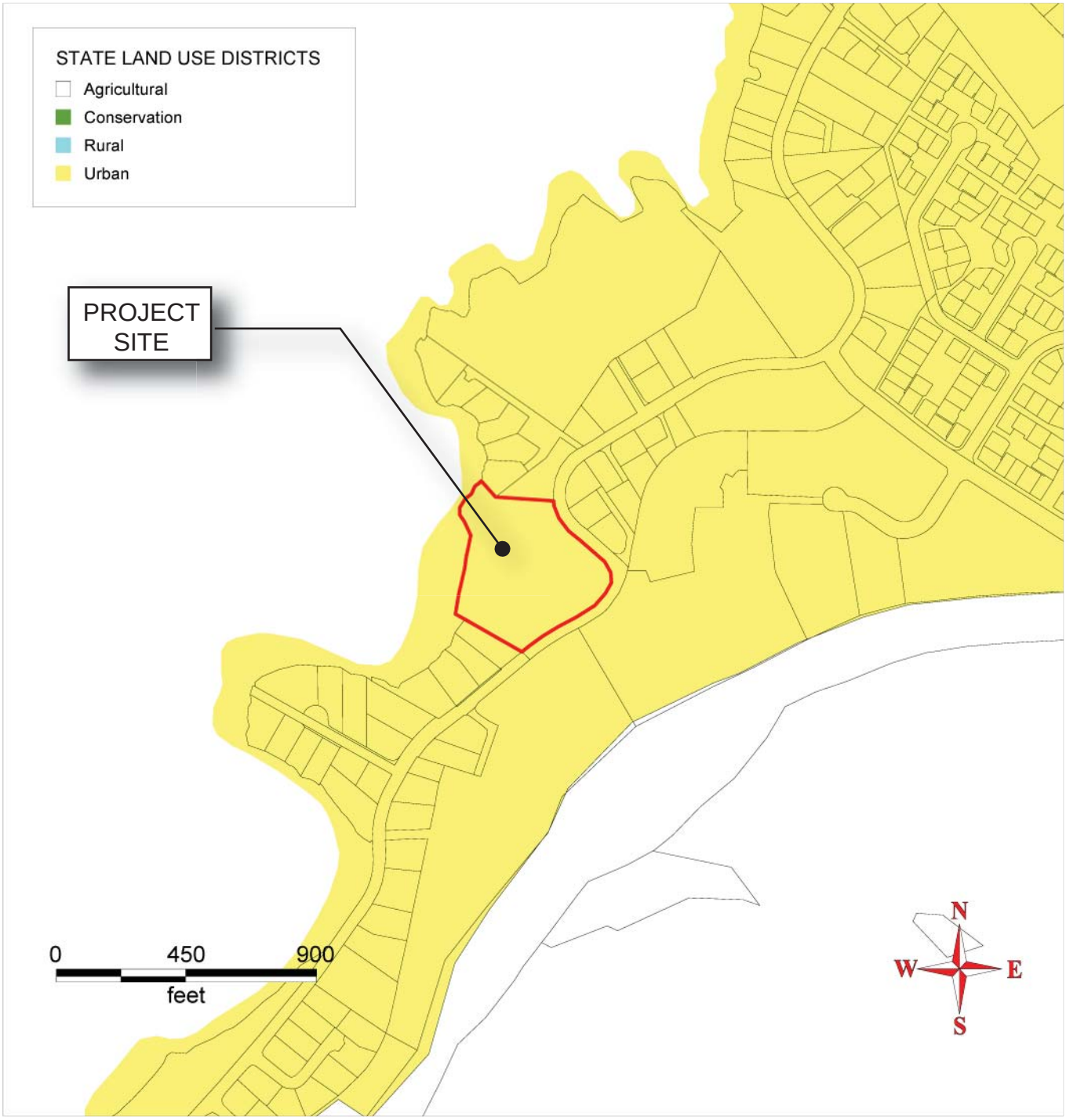

FIGURE 4

Not to Scale	JULY 2012
STATE LAND USE BOUNDARY MAP **KAHANA SUNSET**	CHRIS HART & PARTNERS, INC.

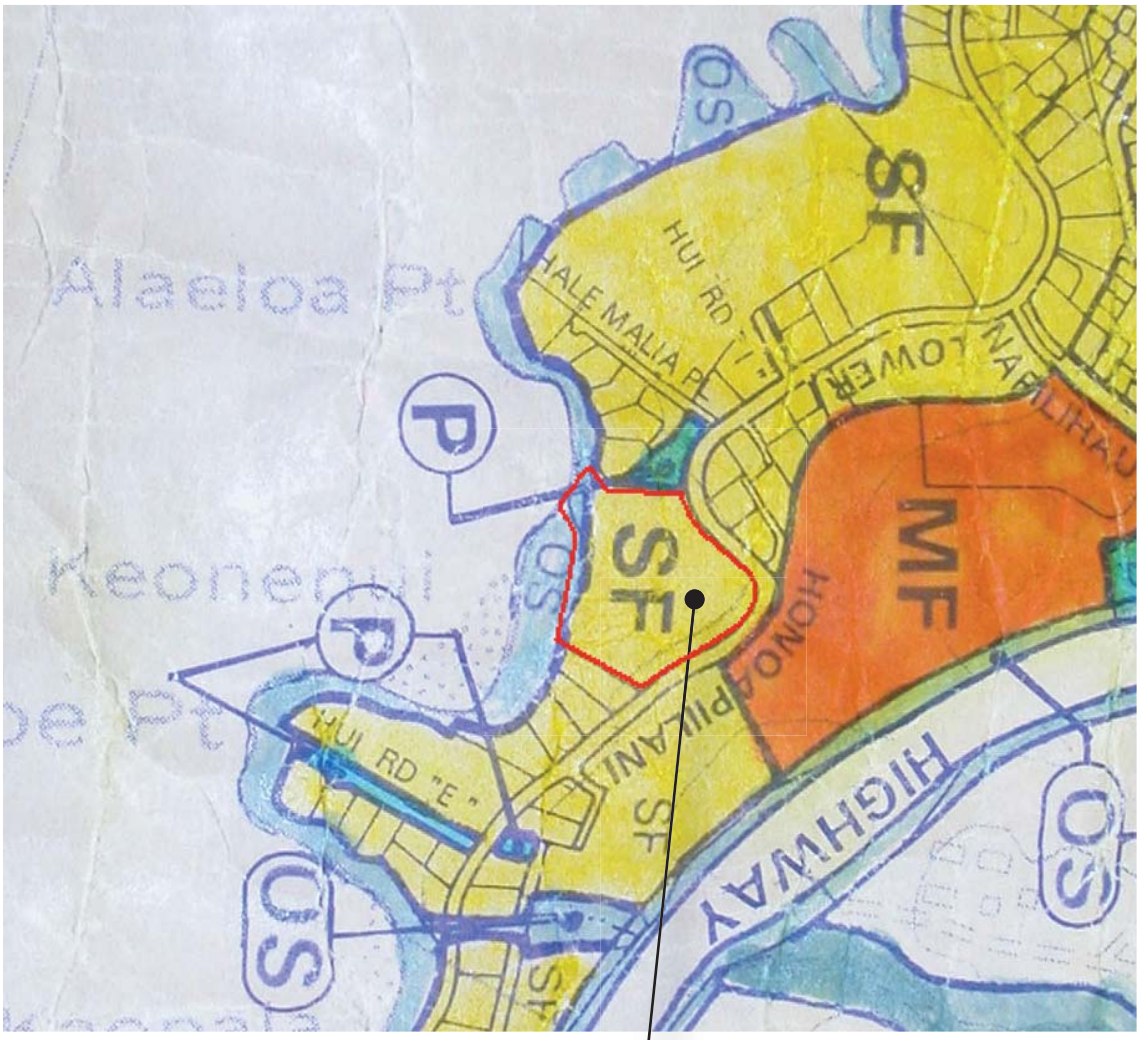

LEGEND

SF	Single Family Residential
MF	Multi-Family Residential
B	Business/Commercial
SBR	Service Business/Residential
BMF	Business/Multi-Family
HI	Heavy Industrial
LI	Light Industrial
H	Hotel
P	Public/Quasi-Public
PK	Park (GC) Golf Course
OS	Open Space
PD	Project District
AP	Airport
AG	Agricultural
R	Rural
C	Conservation
—60—	Airport Special Control District

NOTE: Rural minimum lot size one acre for parcels 4 3 4 11,17,19,20,21,27 76 per Ordinance 2476 of 2/27/86

FIGURE 5

Not to Scale

JULY 2012

WEST MAUI COMMUNITY PLAN

KAHANA SUNSET

CHRIS HART & PARTNERS, INC.

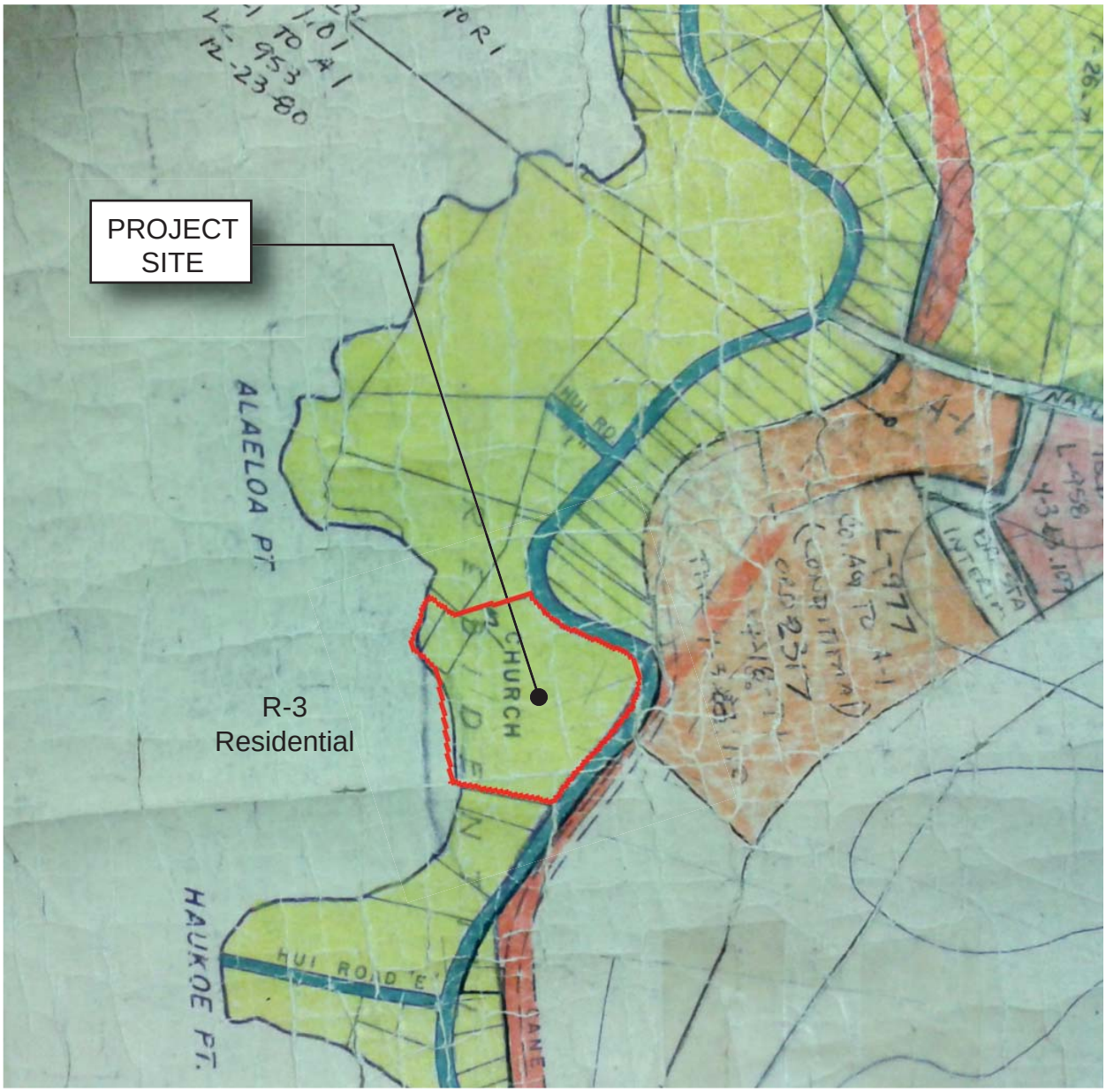

FIGURE 6

Not to Scale	JULY 2012
COUNTY ZONING MAP	
KAHANA SUNSET	

CHRIS HART & PARTNERS, INC.

State of Hawaii

FLOOD HAZARD ASSESSMENT REPORT

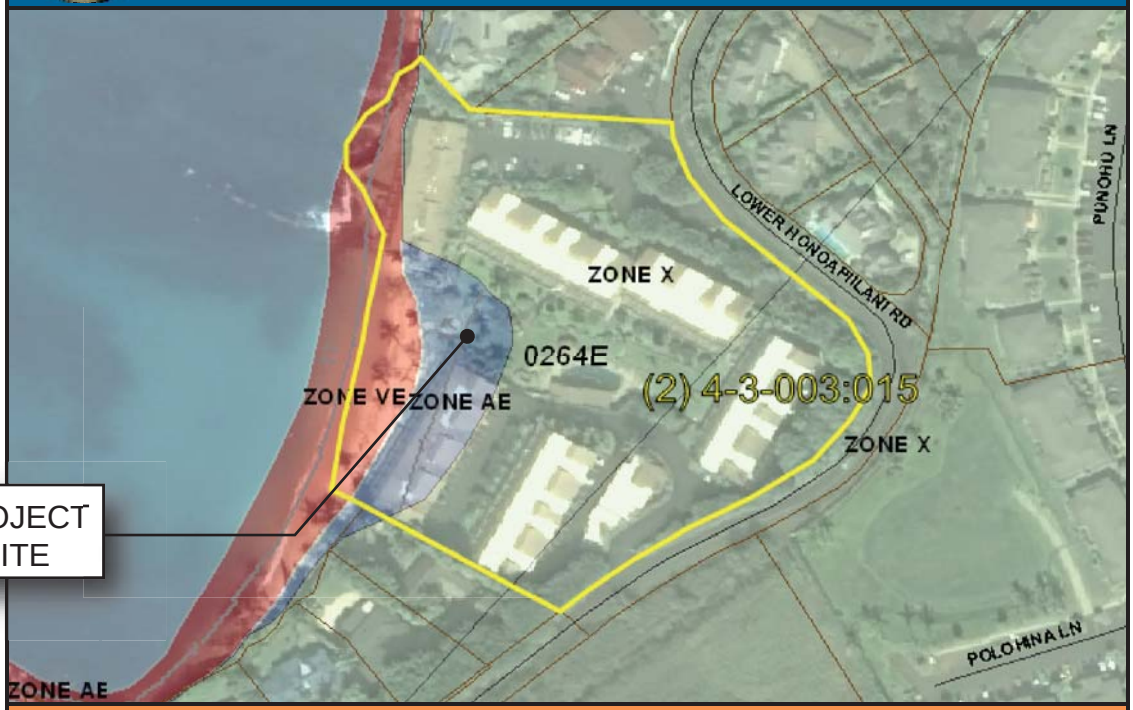

PROJECT SITE

NATIONAL FLOOD INSURANCE PROGRAM

FLOOD ZONE DEFINITIONS

SPECIAL FLOOD HAZARD AREAS SUBJECT TO INUNDATION BY THE 1% ANNUAL CHANCE FLOOD – The 1% annual chance flood (100-year flood), also known as the base flood, is the flood that has a 1% chance of being equaled or exceeded in any given year. The Special Flood Hazard is the area subject to flooding by the 1% annual chance flood. Areas of Special Flood Hazard include Zone A, AE, AH, AO, V, and VE. The Base Flood Elevation (BFE) is the water-surface elevation of the 1% annual chance flood. Mandatory flood insurance purchase applies in these zones:

- Zone A: No BFE determined.
- Zone AE: BFE determined.
- Zone AH: Flood depths of 1 to 3 feet (usually areas of ponding); BFE determined.
- Zone AO: Flood depths of 1 to 3 feet (usually sheet flow on sloping terrain); average depths determined.
- Zone V: Coastal flood zone with velocity hazard (wave action); no BFE determined.
- Zone VE: Coastal flood zone with velocity hazard (wave action); BFE determined.
- Zone AEF: Floodway areas in Zone AE. The floodway is the channel of stream plus any adjacent floodplain areas that must be kept free of encroachment so that the 1% annual chance flood can be carried without increasing the BFE.

NON-SPECIAL FLOOD HAZARD AREA – An area in a low-to-moderate risk flood zone. No mandatory flood insurance purchase requirements apply, but coverage is available in participating communities.

- Zone XS (X shaded): Areas of 0.2% annual chance flood; areas of 1% annual chance flood with average depths of less than 1 foot or with drainage areas less than 1 square mile; and areas protected by levees from 1% annual chance flood.
- Zone X: Areas determined to be outside the 0.2% annual chance floodplain.

OTHER FLOOD AREAS

- Zone D: Unstudied areas where flood hazards are undetermined, but flooding is possible. No mandatory flood insurance purchase requirements apply, but coverage is available in participating communities.

PROPERTY INFORMATION

COUNTY:	MAUI
TMK NO:	(2) 4-3-003-015
PARCEL ADDRESS:	4909 LOWER HONOAPIILANI RD LAHAINA, HI 96761
FIRM INDEX DATE:	SEPTEMBER 25, 2009
LETTER OF MAP CHANGE(S):	NONE
FEMA FIRM PANEL(S):	1500030264E
PANEL EFFECTIVE DATE:	SEPTEMBER 25, 2009

PARCEL DATA FROM:	MAY 2012
IMAGERY DATA FROM:	MAY 2005

IMPORTANT PHONE NUMBERS

County NFIP Coordinator	
County of Maui	
Francis Cerizo, CFM	(808) 270-7771
State NFIP Coordinator	
Carol Tyau-Beam, P.E., CFM	(808) 587-0267

Disclaimer: The Department of Land and Natural Resources assumes no responsibility arising from the use of the information contained in this report. Viewers/Users are responsible for verifying the accuracy of the information and agree to indemnify the Department of Land and Natural Resources from any liability, which may arise from its use.

Preliminary DFIRM Disclaimer: If this map has been identified as "PRELIMINARY", please note that it is being provided for commenting purposes only and is not to be use for official/legal decisions or regulatory compliance.

FIGURE 7

Not to Scale
FEMA Flood Insurance Map

JULY
2012

FLOOD INSURANCE
RATE MAP
KAHANA SUNSET

CHRIS HART & PARTNERS, INC.

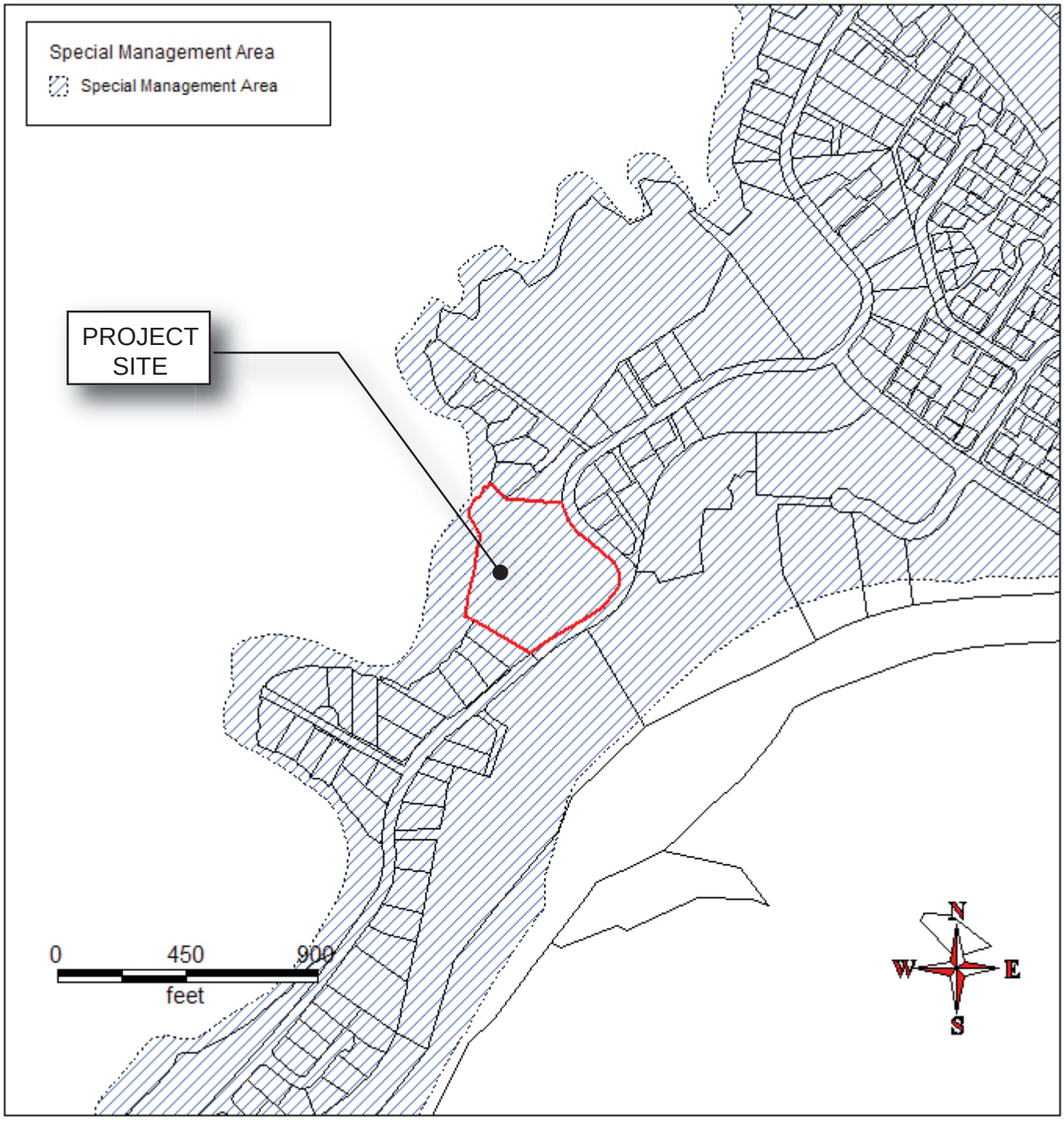

FIGURE 8

Not to Scale	JULY 2012
SPECIAL MANAGEMENT AREA (SMA) MAP **KAHANA SUNSET**	CHRIS HART & PARTNERS, INC.

Photo 1: View from Lower Honoapiilani Road looking makai across the Kahana Sunset property..

PHOTO KEY

Photo 2 Approach to Kahana Sunset traveling north along Lower Honoapiilani Road.

Photo 3: South entrance to Kahana Sunset..

Photo 4: Lower Honoapiilani Road with Kahana Sunset on the lleft and Kahana Villas structures in the distance.

Photo 5: Approach to the north entrance of Kahana Sunset along Lower Honoapiilani Road.

Photo 6: North entrance to Kahana Sunset.

Photo 7: Kahana Sunset north parking lot, looking *makai*.

FIGURE 9.1

Taken on June 27, 2012
unless otherwise noted

JULY
2012

SITE PHOTOGRAPHS

KAHANA SUNSET

CHRIS HART & PARTNERS, INC.

Photo 8: Office, resident manager's unit, and laundry room.

Photo 9: Building A, 10 units.

Photo 10: Building B, 16 units.

PHOTO KEY

Photo 11: Building C, 11 units.

Photo 12: Building D, 14 units.

Photo 13: Building E, 16 units.

Photo 14: Building F, 12 units.

Photo 15: Pool and pool cabana.

Photo 16: Pool, spa, and barbeque gazebo.

Photo 17: Gazebo (left) and covered barbeque area (right). Gazebo will be relocated.

FIGURE 9.2

Taken on June 27, 2012 unless otherwise noted

JULY 2012

SITE PHOTOGRAPHS

KAHANA SUNSET

CHRIS HART & PARTNERS, INC.

Photo 18: Looking north along sandy beach from lanai of Building F (12/21/2011).

Photo 19: Looking north at area where the existing seawall will be removed and reconstructed further inland. The sandy beach will be widened in this area.

PHOTO KEY

Photo 20: Looking south along sandy beach fronting Building F.

Photo 21: Looking north along seawall at the drainage outfall and the Keonenui Room adjacent to Building A.

Photo 22: Exisitng stairway to beach that is proposed to be demolished and rebuilt approximately 30 feet inland.

Photo 23: Looking north along concrete stairway leading to lanai area of Building A (12/21/2011).

Photo 24: Looking down same stairway leading to Keonenui Room. Sandy beach visible in the distance.

FIGURE 9.3

Taken on June 27, 2012
unless otherwise noted

JULY
2012

SITE PHOTOGRAPHS

KAHANA SUNSET

CHRIS HART & PARTNERS, INC.

Photo 25: Looking north along 20-foot high bank fronting Building A.

Photo 26: Looking souh along 20-foot high bank fronting Building A.

Photo 27: Looking souh from property corner along rock & concrete wall *makai* of Building A.

PHOTO KEY

Photo 28: Existing seawall at 36-inch drainage outfall. Outfall wil be relocated approximately 3-feet inland. Green plywood covers sink holes behind seawall.

Photo 29: Sink holes behind seawall (10/10/2011).

Photo 30: Typical sink hole behind seawall (1/10/2011).

Photo 31: Top of 15-foot deep drywell (12/21/2011). 36-inch drain line from drywell to outfall at seawaill will be replaced.

Photo 32: View of central courtyard looking makai from Building D. Hedge at left foreground screens the existing 15-foot deep drywell.

FIGURE 9.4

Taken on June 27, 2012
unless otherwise noted

JULY
2012

SITE PHOTOGRAPHS

KAHANA SUNSET

CHRIS HART & PARTNERS, INC.

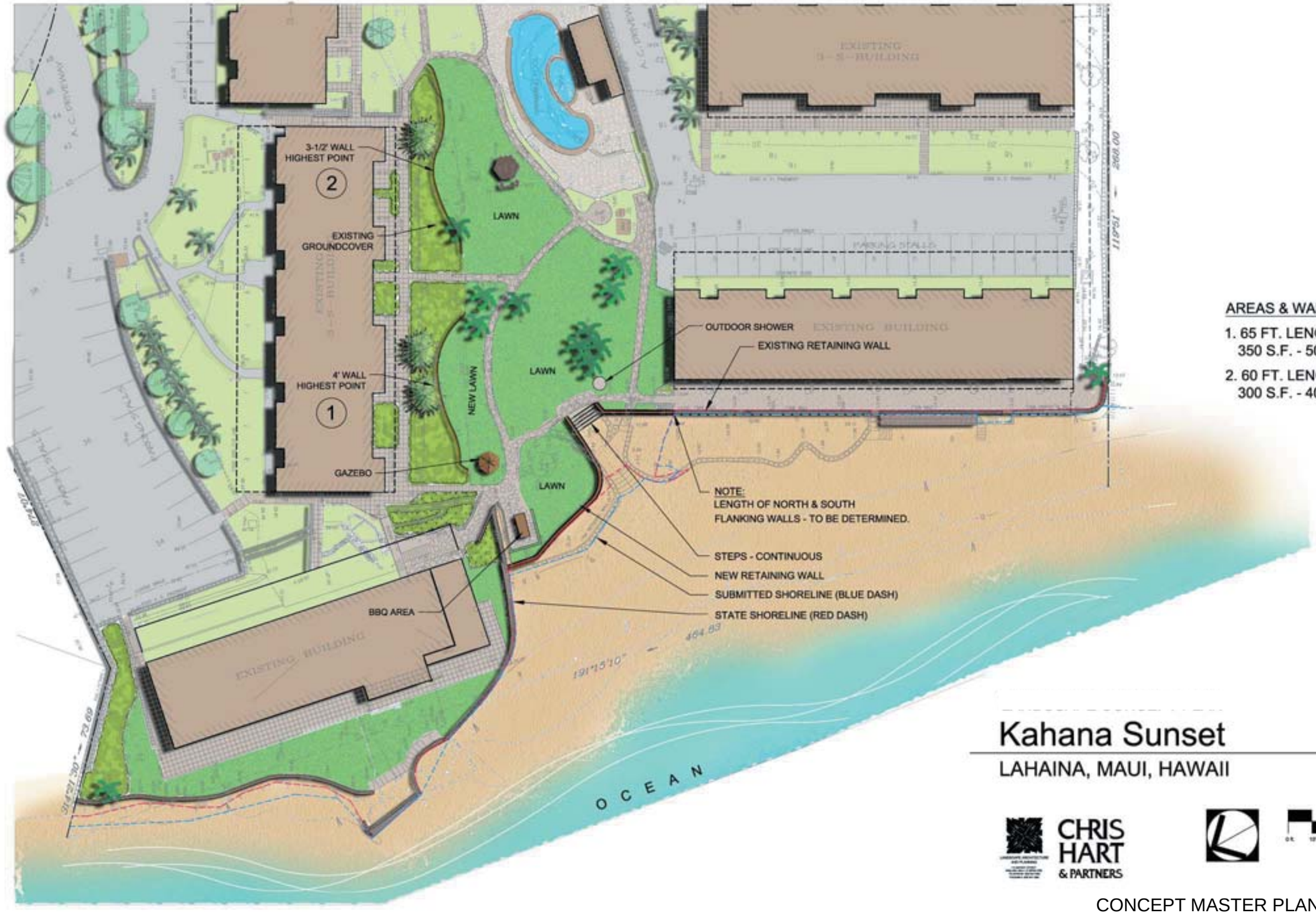

AREAS & WALLS

1. 65 FT. LENGTH
   350 S.F. - 500 S.F.
2. 60 FT. LENGTH
   300 S.F. - 400 S.F.

Kahana Sunset

LAHAINA, MAUI, HAWAII

FIGURE 10

CHRIS HART & PARTNERS

CONCEPT MASTER PLAN

PROJECT: 09-143
DATE: 07/18/12

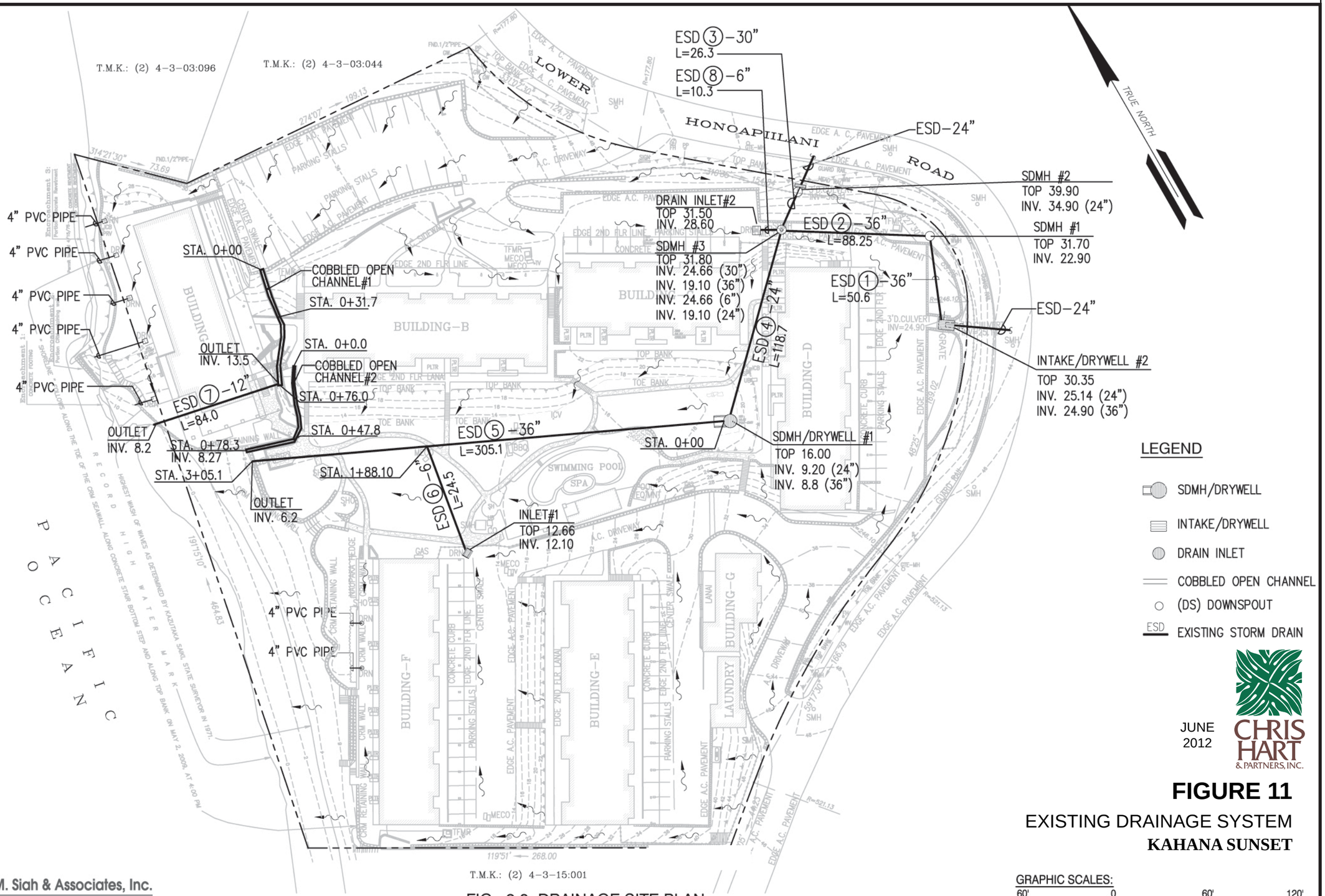

T.M.K.: (2) 4-3-15:001

FIG. 2-3 DRAINAGE SITE PLAN
SCALE: 1"=80'

JUNE
2012

CHRIS HART & PARTNERS, INC.

FIGURE 11

EXISTING DRAINAGE SYSTEM
KAHANA SUNSET

GRAPHIC SCALES:
60' 0 60' 120'
SCALE: 1" = 60'-0"

Marc M. Siah & Associates, Inc.
Consulting Civil . Structural . Environmental & Ocean Engineers
810 S. Beretania Street, Suite 201, Honolulu, Hawaii 96813

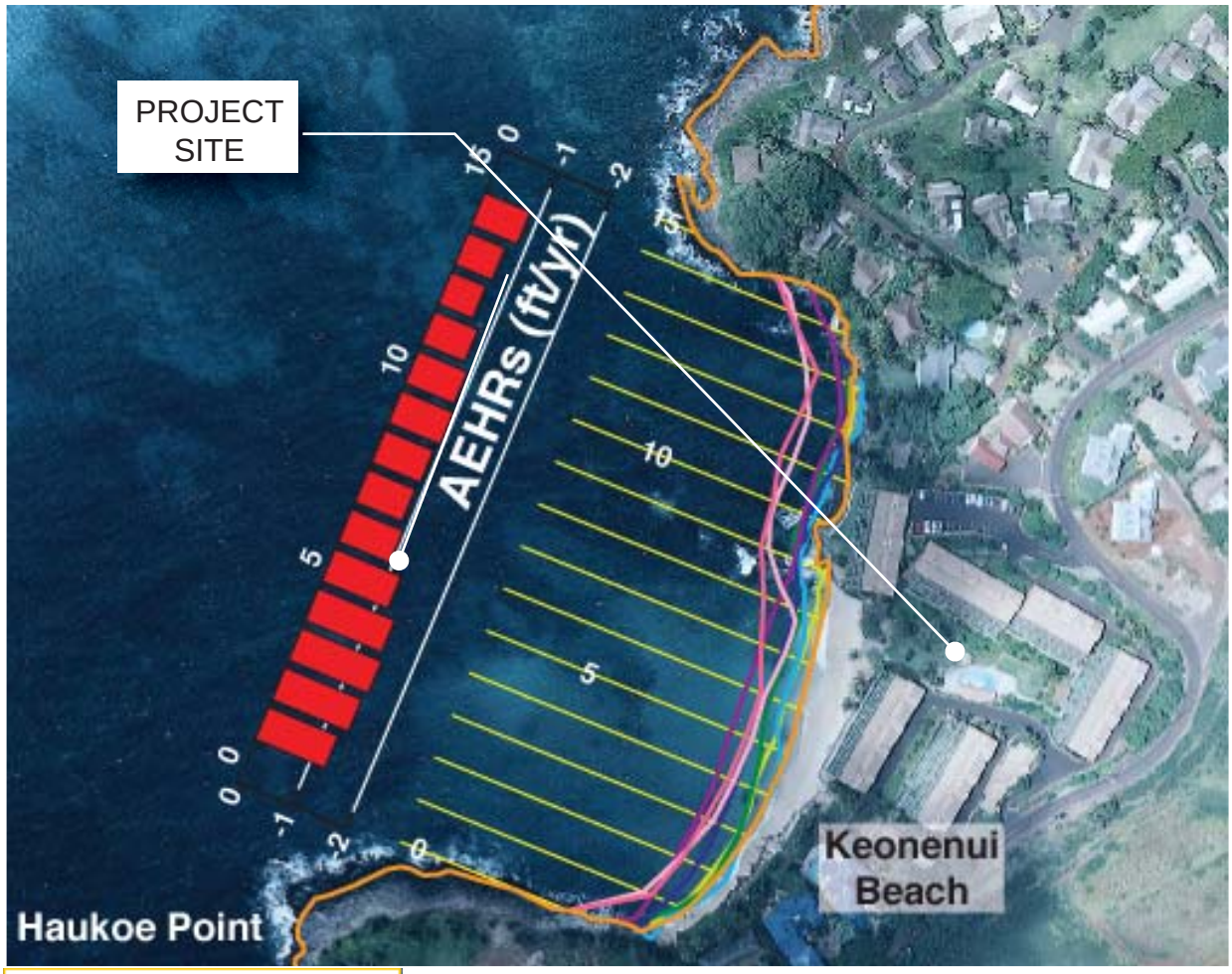

HISTORICAL SHORELINES

- 1912
- Nov 1949
- 1960
- Mar 1975
- Aug 1987
- Mar 1988
- Nov 1992
- May 1997
- Erosion rate measurement locations (shore normal transects)

Historical beach positions, color coded by year, are determined using ortho-rectified and georeferenced aerial photographs and National Ocean Survey (NOS) topographic survey charts. The low water mark is used as the historical shoreline, or shoreline change reference feature (SCRF).

For situations in which there is coastal armoring or rocky shoreline seaward of any vegetation, the vegetation line is drawn along the seaward side of the rock or armoring. If there is no sandy beach in these areas, both the vegetation line and the SCRF are delineated along the mean high water line.

Movement of the SCRF is used to calculate erosion rates along shore-normal transects spaced every 20 m (66 ft) along the shoreline. The 1987 SCRF is not used in the calculation of the AEHR, however it provides a gauge of seasonal uncertainty.

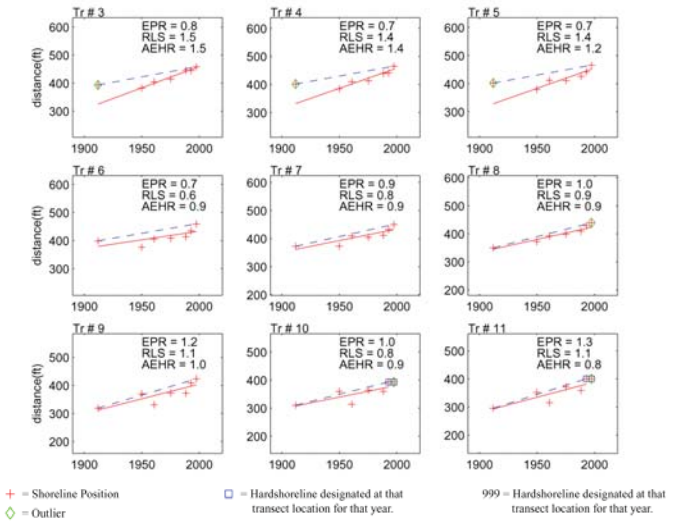

FIGURE 12

Not to Scale

JULY 2012

ANNUAL EROSION HAZARD RATE MAP

KAHANA SUNSET

CHRIS HART & PARTNERS, INC.

Alaeloa, Maui, Hawaii Smoothed Erosion Rates
Coastal Geology Group, University of Hawaii

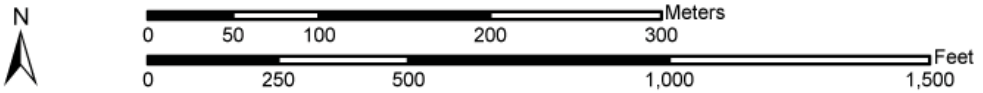

Map Unit Symbol	Map Unit Name
BS	Beaches
KbB	Kahana silty clay, 3 to 7 percent slopes
KbC	Kahana silty clay, 7 to 15 percent slopes
rRS	Rough broken and stony land

USDA Natural Resources Conservation Service

Source of Map: Natural Resources Conservation Service
Web Soil Survey URL: http://websoilsurvey.nrcs.usda.gov
Coordinate System: UTM Zone 4N NAD83

This product is generated from the USDA-NRCS certified data as of the version date(s) listed below.

Soil Survey Area: Island of Maui, Hawaii
Survey Area Data: Version 7, Dec 31, 2006

FIGURE 13

Scale as shown

JULY 2012

SOILS MAP

KAHANA SUNSET

CHRIS HART & PARTNERS, INC.

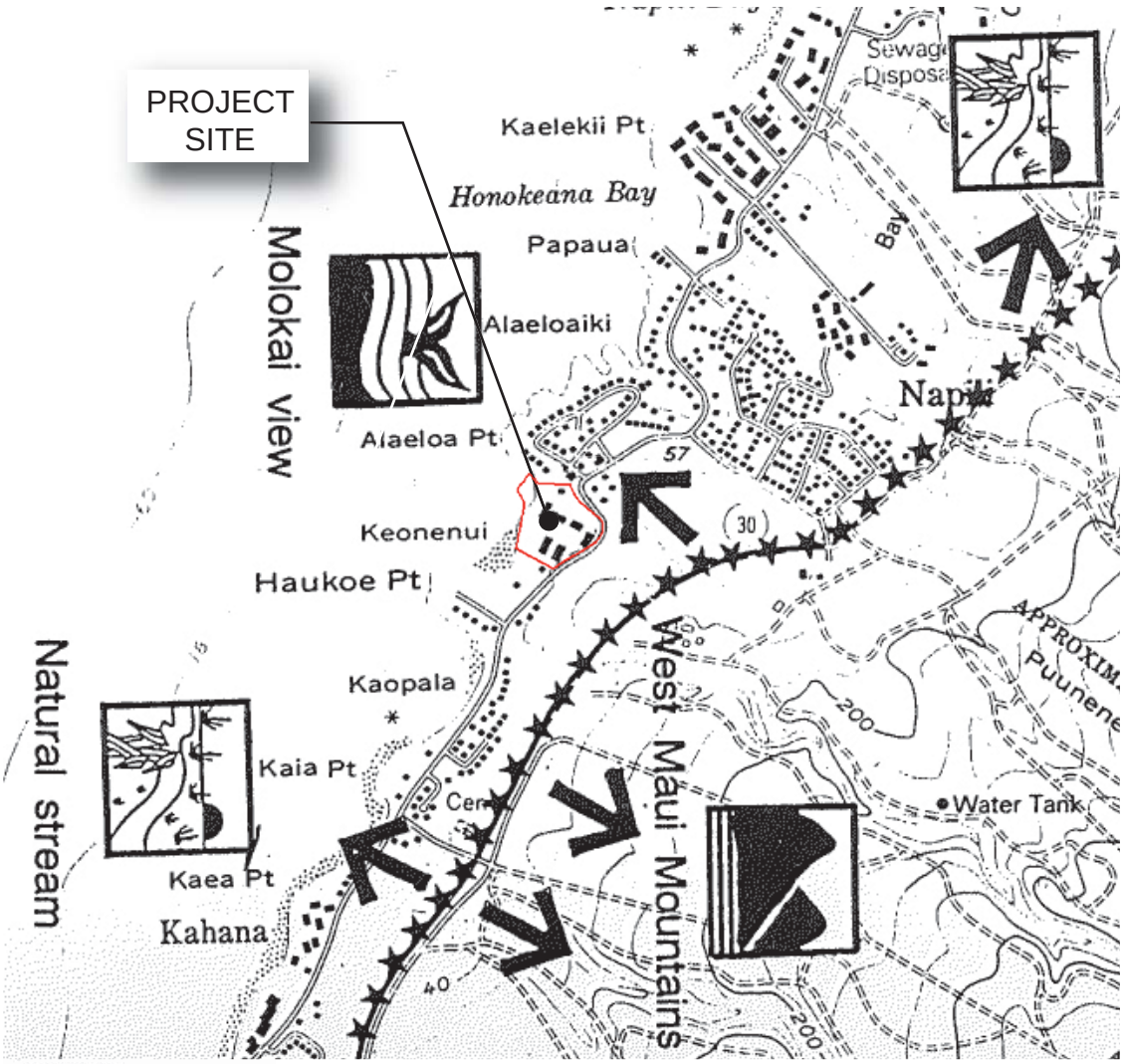

MAP LEGEND
8.1.7 KAANAPALI — KAPALUA

OPEN SPACES

MAUKA VIEWS

AREA OF SCENIC BEAUTY

COASTAL VIEW

COASTAL LAND FORM

Environmental Planning Associates. *Maui Scenic Coastal Resources Study*, August 1990.

FIGURE 14

Not to Scale	JULY 2012
SCENIC STUDY MAP	
KAHANA SUNSET	

CHRIS HART & PARTNERS, INC.

APPENDICES

APPENDIX A
Public and Agency Pre-Consultation

CHARMAINE TAVARES
MAYOR

JEFFREY A. MURRAY
CHIEF

ROBERT M. SHIMADA
DEPUTY CHIEF

COUNTY OF MAUI
DEPARTMENT OF FIRE AND PUBLIC SAFETY
FIRE PREVENTION BUREAU

313 MANEA PLACE • WAILUKU, HAWAII 96793
(808) 244-9161 • FAX (808) 244-1363

Date : **August 27, 2010**

To : **Matthew M. Slepin**
Chris Hart & Partners, Inc.
115 N. Market St.
Wailuku, HI 96793

Subject : **Kahana Sunset Condominium Shoreline Erosion Mitigation and Bank Stabilization**
Early Consultation for EA
TMK (2) 4-3-003: 015
4909 Lower Honoapiilani Rd.

Dear Matthew,

Thank you for allowing our office the opportunity to comment on this subject. At this time the Fire Prevention Bureau has no specific comments to add to the EA regarding the proposed work to be done for shoreline erosion mitigation and bank stabilization.

If there are any questions or comments, please feel free to contact me by mail or at 244-9161 ext. 23.

Sincerely,

Paul Haake
Captain, Fire Prevention Bureau
313 Manea Place
Wailuku, HI 96793

CC: Jason 09/1/43

RECEIVED
AUG 31 2010
CHRIS HART & PARTNERS, INC.
Landscape Architecture

DEPARTMENT OF
HOUSING AND HUMAN CONCERNS
HOUSING DIVISION
COUNTY OF MAUI

CHARMAINE TAVARES
Mayor
LORI TSUHAKO
Director
JO-ANN T. RIDAO
Deputy Director

35 LUNALILO STREET, SUITE 102 • WAILUKU, HAWAII 96793 • PHONE (808) 270-7351 • FAX (808) 270-6284

August 30, 2010

RECEIVED
SEP 0 2 2010
CHRIS HART & PARTNERS, INC.
Landscape Architecture and P...
CH. Jasm 09/1/43

Mr. Matthew Slepin
Senior Associate
Chris Hart & Partners INC.
115 N. Market Street
Wailuku, Hawaii 96793-1717

Dear Mr. Slepin:

Subject: **Early Consultation Request for Proposed Shoreline Erosion Mitigation and Bank Stabilization at the Kahana Sunset Condominium, on property located at 4909 Lower Honoapiilani Road, Alaeloa, Lahaina, Maui.**
TMK (2)4-3-003:015

The Department has reviewed the request for Early Consultation for the above subject project. Based on our review, we have determined that the subject project is not subject to Chapter 2.96, Maui County Code. The Department has no additional comments to offer at this time.

Please call Mr. Buddy Almeida of our Housing Division at (808) 270-7356 if you have any questions.

Sincerely,

Wayde T. Oshiro

WAYDE T. OSHIRO
Housing Administrator

cc: Director of Housing and Human Concerns

CHARMAINE TAVARES
Mayor
KATHLEEN ROSS AOKI
Director
ANN T. CUA
Deputy Director

RECEIVED
NOV 04 2010
CHRIS HART & PARTNERS, INC.
Landscape Architecture and Plannin

CC: Jason
09/143

COUNTY OF MAUI
DEPARTMENT OF PLANNING

November 3, 2010

Mr. Matthew M. Slepin
Chris Hart & Partners, Inc.
115 North Market Street
Wailuku, Hawaii 96793

Dear Mr. Slepin:

SUBJECT: REQUEST FOR COMMENTS (RFC) ON EARLY CONSULTATION FOR ENVIRONMENTAL ASSESSMENT (EA) FOR PROPOSED SHORELINE EROSION MITIGATION AND BANK STABILIZATION AT THE KAHANA SUNSET CONDOMINIUM, ON PROPERTY SITUATED AT 4909 LOWER HONOAPI'ILANI ROAD, ALAELOA, LAHAINA, MAUI, HAWAII; TMK: (2) 4-3-003:015 (RFC 2010/0122)

The Department of Planning (Department) is in receipt of the above-referenced RFC. Only a two-page project description and site map were provided. In addition, on October 28, 2010, the Department discussed the below comments with you in a meeting. Upon reviewing the request, the Department has the following comments to offer:

1. Comply with all conditions required under the County of Maui Special Management Area (SMA) Emergency Permit (SM3 2009/0005) issued on December 29, 2009;

2. Remove the nonstructural serpentine wall that is encroaching onto the beach and shoreline;

3. Provide for lateral shoreline access;

4. Provide public access to the beach through the parcel;

5. Include a plan for long-term strategic retreat for structures that have been threatened by coastal erosion located along this highly eroding shoreline;

6. Apply for a Shoreline Setback Variance Permit Application;

7. The Maui Planning Commission will be the accepting authority for the Draft and Final EA; and

8. A SMA Use Permit (SMA Major) will be required.

Thank you for the opportunity to comment. If additional clarification is required, please contact Coastal Resources Planner James Buika by email at james.buika@mauicounty.gov or by phone at (808) 270-6271.

Sincerely,

CLAYTON I. YOSHIDA, AICP
Planning Program Administrator

for KATHLEEN ROSS AOKI
Planning Director

xc: James A. Buika, Coastal Resources Planner
RFC File
General File

KRA:CIY:JAB:vb
K:\WP_DOCS\PLANNING\RFC\2010\0122_KahanaSunsetAOAOShorelineErosionMitigation\Comments, 10.28.10.doc

CHARMAINE TAVARES
Mayor

MILTON M. ARAKAWA, A.I.C.P.
Director

MICHAEL M. MIYAMOTO
Deputy Director

RALPH M. NAGAMINE, L.S., P.E.
Development Services Administration

CARY YAMASHITA, P.E.
Engineering Division

BRIAN HASHIRO, P.E.
Highways Division

COUNTY OF MAUI
DEPARTMENT OF PUBLIC WORKS
DEVELOPMENT SERVICES ADMINISTRATION
250 SOUTH HIGH STREET
WAILUKU, MAUI, HAWAII 96793

September 3, 2010

Mr. Matthew M. Slepin, Senior Associate
CHRIS HART & PARTNERS, INC.
115 North Market Street
Wailuku, Maui, Hawaii 96793

Subject: EARLY CONSULTATION REQUEST FOR PROPOSED SHORELINE EROSION MITIGATION AND BANK STABILIZATION AT THE KAHANA SUNSET CONDOMINIUM
TMK (2) 4-3-003:015

Dear Mr. Slepin:

We reviewed the subject application and have no comments at this time.

Please call Michael Miyamoto at 270-7845 if you have any questions regarding this letter.

Sincerely,

Milton M. Arakawa, A.I.C.P.
Director of Public Works

ls S:\LUCA\CZM\prop_shoreline_erosion_kahana_sunset_erly_43003015_ls.wpd
xc: Highways Division
Engineering Division

cc: Jam 09/1143

RECEIVED
SEP 08 2010
CHRIS HART & PARTNERS, INC.
Landscape Architecture

CHARMAINE TAVARES
MAYOR

DON A. MEDEIROS
Director
WAYNE A. BOTEILHO
Deputy Director
Telephone (808) 270-7511
Facsimile (808) 270-7505

DEPARTMENT OF TRANSPORTATION

COUNTY OF MAUI
200 South High Street
Wailuku, Hawaii, USA 96793-2155

August 11, 2010

Mr. Matthew Slepin
Chris Hart & Partners Inc.
115 N. Market Street
Wailuku, Maui, Hawaii 96793

Subject: EA for Proposed Shoreline Erosion Control at Kahana Sunset Condominium

Dear Mr. Slepin,

Thank you for the opportunity to comment on this project. We have no comments to make at this time.

Please feel free to contact me if you have any questions.

Sincerely,

Don Medeiros
Director

RECEIVED
AUG 17 2010
CHRIS HART & PARTNERS, INC.
Landscape Architecture and Planning
CC: Jason
09/143

POLICE DEPARTMENT
COUNTY OF MAUI

CHARMAINE TAVARES
MAYOR

OUR REFERENCE

YOUR REFERENCE

55 MAHALANI STREET
WAILUKU, HAWAII 96793
(808) 244-6400
FAX (808) 244-6411

GARY A. YABUTA
CHIEF OF POLICE

CLAYTON N.Y.W. TOM
DEPUTY CHIEF OF POLICE

August 23, 2010

Mr. Matthew M. Slepin, Senior Associate
Chris Hart & Partners, Inc.
115 N. Market Street
Wailuku, HI 96793

Dear Mr. Slepin:

SUBJECT: Environmental Assessment (EA – Early Consultation Request for Proposed Shoreline Erosion Mitigation and Bank Stabilization at the Kahana Sunset Condominium, on property situated at 4909 Lower Honoapiilani Road, Alaeloa, Lahaina; TMK: (2) 4-3-003:015

This is in response to your letter dated August 5, 2010, requesting comments on the above subject.

We have reviewed the information submitted for the above mentioned project and would like to reserve our comments and recommendations until a final draft of all proposals have been submitted. Thank you for allowing us to review this project.

Very truly yours,

Assistant Chief Danny J. Matsuura
for: Gary A. Yabuta
Chief of Police

c: Kathleen Ross Aoki, Maui County Dept. of Planning

cc: Jasm 09/143

RECEIVED

AUG 26 2010

CHRIS HART & PARTNERS, INC.
Landscape Architecture and Planning

LINDA LINGLE
GOVERNOR OF HAWAII

CHIYOME L. FUKINO, M. D.
DIRECTOR OF HEALTH

LORRIN W. PANG, M. D., M. P. H.
DISTRICT HEALTH OFFICER

STATE OF HAWAII
DEPARTMENT OF HEALTH
MAUI DISTRICT HEALTH OFFICE
54 HIGH STREET
WAILUKU, MAUI, HAWAII 96793-2102

RECEIVED
SEP 10 2010
CHRIS HART & PARTNERS, INC.
Landscape Architecture and Planning

Cc: Jason 09/14/3

September 9, 2010

Mr. Matthew M. Slepin
Senior Associate, Planner
Chris Hart & Partners, Inc.
115 North Market Street
Wailuku, Hawai`i 96793

Dear Mr. Slepin:

Subject: Environmental Assessment for Proposed Shoreline Erosion Mitigation and Bank Stabilization at the Kahana Sunset Condominium

Thank you for the opportunity to comment on this project. We have the following comments:

1. National Pollutant Discharge Elimination System (NPDES) permit coverage maybe required for this project. The Clean Water Branch should be contacted at 808 586-4309.

2. The noise created during the construction phase of the project may exceed the maximum allowable levels as set forth in Hawaii Administrative Rules (HAR), Chapter 11-46, "Community Noise Control." A noise permit may be required and should be obtained before the commencement of work.

It is strongly recommended that the Standard Comments found at the Department's website: http://hawaii.gov/health/environmental/env-planning/landuse/landuse.html be reviewed, and any comments specifically applicable to this project should be adhered to.

Should you have any questions, please call me at 808 984-8230 or E-mail me at patricia.kitkowski@doh.hawaii.gov.

Sincerely,

Patti Kitkowski

Patti Kitkowski
Acting District Environmental Health Program Chief

c EPO

LINDA LINGLE
GOVERNOR OF HAWAII

CHIYOME L. FUKINO, M.D.
DIRECTOR OF HEALTH

RECEIVED
AUG 18 2010
CHRIS HART & PARTNERS, INC.
Landscape Architecture and Planning

STATE OF HAWAII
DEPARTMENT OF HEALTH
P.O. BOX 3378
HONOLULU, HAWAII 96801-3378

In reply, please refer to:
EMD / CWB

08031PJF.10

CC: Jason
091143

August 16, 2010

Mr. Matthew M. Slepin
Plannner
Chris Hart & Partners, Inc.
115 N. Market Street
Wailuku, Island of Maui, Hawaii 96793-1717

Dear Mr. Slepin:

SUBJECT: Environmental Assessment (EA) Early Consultation Request for Proposed Shoreline Erosion Mitigation and Bank Stabilization at Kahana Sunset Condominium Lahaina, Island of Maui, Hawaii TMK: (2) 4-3-003:015

The Department of Health, Clean Water Branch (CWB), has reviewed the subject document and offers these comments on your project.

Please note that our review is based solely on the information provided in the subject document and its compliance with the Hawaii Administrative Rules (HAR), Chapters 11-54 and 11-55. You may be responsible for fulfilling additional requirements related to our program. We recommend that you also read our standard comments on our website at: http://www.hawaii.gov/health/environmental/env-planning/landuse/CWB-standardcomment.pdf.

1. Any project and its potential impacts to State waters must meet the following criteria:

   a. Antidegradation policy (HAR, Section 11-54-1.1), which requires that the existing uses and the level of water quality necessary to protect the existing uses of the receiving State water be maintained and protected.

   b. Designated uses (HAR, Section 11-54-3), as determined by the classification of the receiving State waters.

   c. Water quality criteria (HAR, Sections 11-54-4 through 11-54-8).

2. You may be required to obtain a National Pollutant Discharge Elimination System (NPDES) permit for discharges of wastewater, including storm water runoff, into State surface waters (HAR, Chapter 11-55). For the following types of discharges into Class A or Class 2 State waters, you may apply for an NPDES general permit coverage by submitting a Notice of Intent (NOI) form:

   a. Storm water associated with construction activities, including clearing, grading, and excavation, that result in the disturbance of equal to or greater than one (1) acre of total land area. The total land area includes a contiguous area where multiple separate and distinct construction activities may be taking place at different times on different schedules under a larger common plan of development or sale. An NPDES permit is required before the start of the construction activities.

   b. Hydrotesting water.

   c. Construction dewatering effluent.

   You must submit a separate NOI form for each type of discharge at least 30 calendar days prior to the start of the discharge activity, except when applying for coverage for discharges of storm water associated with construction activity. For this type of discharge, the NOI must be submitted 30 calendar days before to the start of construction activities. The NOI forms may be picked up at our office or downloaded from our website at: http://www.hawaii.gov/health/environmental/water/cleanwater/forms/genl-index.html.

3. For types of wastewater not listed in Item No. 2 above or wastewater discharging into Class 1 or Class AA waters, you may need an NPDES individual permit. An application for an NPDES individual permit must be submitted at least 180 calendar days before the commencement of the discharge. The NPDES application forms may be picked up at our office or downloaded from our website at: http://www.hawaii.gov/health/environmental/water/cleanwater/forms/indiv-index.html.

4. Please contact the Army Corps of Engineers, Regulatory Branch (Tel. No.: 438-9258) to determine if this project requires a Section 404 Permit. Pursuant to Federal Water Pollution Control Act (commonly known as the "Clean Water Act" (CWA)), Paragraph 401(a)(1), a Section 401 Water Quality Certification (WQC) is required for "[a]ny applicant for Federal license or permit to conduct any activity including, but not limited to, the construction or operation of facilities, which may **result** in any discharge into the navigable waters..." (Emphasis added). The term "discharge" is defined in CWA, Subsections 502(16), 502(12), and 502(6); Title 40, Code of Federal Regulations, Section 122.2; and HAR, Chapter 11-54.

5. Please note that all discharges related to the project construction or operation activities, whether or not NPDES permit coverage and/or section 401 WQC are required, must comply with the State's Water Quality Standards. Noncompliance with water quality requirements contained in HAR, Chapter 11-54, and/or permitting requirements, specified in HAR, Chapter 11-55, may be subject to penalties of $25,000 per day per violation.

If you have any questions, please visit our website at: http://www.hawaii.gov/health/environmental/water/cleanwater/index.html, or contact the Engineering Section, CWB, at 586-4309.

Sincerely,

Alec Wong

ALEC WONG, P.E., CHIEF
Clean Water Branch

JF:ml

c: DOH-EPO #I-3299 [via email only]

LINDA LINGLE
GOVERNOR OF HAWAII

LAURA H. THIELEN
CHAIRPERSON
BOARD OF LAND AND NAYURAL RESOURCES
COMMISSION ON WATER RESOURCE MANAGEMENT

STATE OF HAWAII
DEPARTMENT OF LAND AND NATURAL RESOURCES
LAND DIVISION
POST OFFICE BOX 621
HONOLULU, HAWAII 96809

RECEIVED
SEP 10 2010
CHRIS HART & PARTNERS, INC.
Landscape Architecture and Planning

CC: Jason
09/143

September 9, 2010

Chris Hart & Partners, Inc.
115 N. Market Street
Wailuku, Hawaii 96793-1717

Attention: Mr. Matthew M. Slepin, Senior Associate Planner

Ladies and Gentlemen:

Subject: Early Consultation for Proposed Shoreline Erosion Mitigation and Bank Stabilization at the Kahana Sunset Condominium

Thank you for the opportunity to review and comment on the subject matter. The Department of Land and Natural Resources' (DLNR), Land Division distributed or made available a copy of your report pertaining to the subject matter to DLNR Divisions for their review and comment.

Other than the comments from Division of Boating & Ocean Recreation, Division of Aquatic Resources, Commission on Water Resource Management, Office of Conservation & Coastal Lands, Division of Forestry & Wildlife, the Department of Land and Natural Resources has no other comments to offer on the subject matter. Should you have any questions, please feel free to call our office at 587-0433. Thank you.

Sincerely,

Charlene D. Unoki

for Morris M. Atta
Acting Administrator

LINDA LINGLE
GOVERNOR OF HAWAII

LAURA H. THIELEN
CHAIRPERSON
BOARD OF LAND AND NATURAL RESOURCES
COMMISSION ON WATER RESOURCE MANAGEMENT

STATE OF HAWAII
DEPARTMENT OF LAND AND NATURAL RESOURCES
LAND DIVISION

POST OFFICE BOX 621
HONOLULU, HAWAII 96809

JAR3284

August 12, 2010

RECEIVED
LAND DIVISION
2010 AUG 31 P 3 17
DEPT. OF LAND & NATURAL RESOURCES
STATE OF HAWAII

MEMORANDUM

TO: ~~DLNR Agencies:~~
x Div. of Aquatic Resources
x ~~Div. of Boating & Ocean Recreation~~
x Engineering Division
x Div. of Forestry & Wildlife
__ Div. of State Parks
x Commission on Water Resource Management
x Office of Conservation & Coastal Lands
x Land Division –Maui District/Ian
x Historic Preservation

RECEIVED
AUG 18 2010
AQUATIC RESOURCES

FROM: Charlene Unoki, Assistant Administrator
SUBJECT: Early Consultation Request for Proposed Shoreline Erosion Mitigation and Bank Stabilization at the Kahana Sunset Condominium
LOCATION: Island of Maui
APPLICANT: Chris Hart & Partners, Inc. on behalf of Kahana Sunset AOAO

Transmitted for your review and comment on the above referenced document. We would appreciate your comments on this document. Please submit any comments by September 5, 2010.

If no response is received by this date, we will assume your agency has no comments. If you have any questions about this request, please contact my office at 587-0433. Thank you.

Attachments

(X) We have no objections.
(X) We have no comments.
( ) Comments are attached.

Signed: Francis Oishi
Date: 8/25/10

RECEIVED
Maui
AUG 24 2010

Div. of Aquatic Resources

LINDA LINGLE
GOVERNOR OF HAWAII

LAURA H. THIELEN
CHAIRPERSON
BOARD OF LAND AND NATURAL RESOURCES
COMMISSION ON WATER RESOURCE MANAGEMENT

STATE OF HAWAII
DEPARTMENT OF LAND AND NATURAL RESOURCES
LAND DIVISION

POST OFFICE BOX 621
HONOLULU, HAWAII 96809

August 12, 2010

MEMORANDUM

TO: **DLNR Agencies:**
x Div. of Aquatic Resources
x Div. of Boating & Ocean Recreation
x Engineering Division
x Div. of Forestry & Wildlife
__ Div. of State Parks
x Commission on Water Resource Management
x Office of Conservation & Coastal Lands
x Land Division – Maui District/Ian
x Historic Preservation

FROM: Charlene Unoki, Assistant Administrator
SUBJECT: Early Consultation Request for Proposed Shoreline Erosion Mitigation and Bank Stabilization at the Kahana Sunset Condominium
LOCATION: Island of Maui
APPLICANT: Chris Hart & Partners, Inc. on behalf of Kahana Sunset AOAO

Transmitted for your review and comment on the above referenced document. We would appreciate your comments on this document. Please submit any comments by September 5, 2010.

If no response is received by this date, we will assume your agency has no comments. If you have any questions about this request, please contact my office at 587-0433. Thank you.

Attachments

( ) We have no objections.
(x) We have no comments.
( ) Comments are attached.

Signed: _____
Date: 8/31/10

LINDA LINGLE
GOVERNOR OF HAWAII

LAURA H. THIELEN
CHAIRPERSON
BOARD OF LAND AND NATURAL RESOURCES
COMMISSION ON WATER RESOURCE MANAGEMENT

RUSSELL Y. TSUJI
ACTING FIRST DEPUTY

LENORE N. OHYE
ACTING DEPUTY DIRECTOR - WATER

AQUATIC RESOURCES
BOATING AND OCEAN RECREATION
BUREAU OF CONVEYANCES
COMMISSION ON WATER RESOURCE MANAGEMENT
CONSERVATION AND COASTAL LANDS
CONSERVATION AND RESOURCES ENFORCEMENT
ENGINEERING
FORESTRY AND WILDLIFE
HISTORIC PRESERVATION
KAHOOLAWE ISLAND RESERVE COMMISSION
LAND
STATE PARKS

RECEIVED
LAND DIVISION
2010 AUG 19 P 2:50
DEPT OF LAND & NATURAL RESOURCES
STATE OF HAWAII

STATE OF HAWAII
DEPARTMENT OF LAND AND NATURAL RESOURCES
OFFICE OF CONSERVATION AND COASTAL LANDS
POST OFFICE BOX 621
HONOLULU, HAWAII 96809

REF:OCCL:AB

Correspondence: MA-11-22
AUG 19 2010

TO: Charlene Unoki, Assistant Administrator
Land Division

FROM: Samuel J. Lemmo, Administrator
Office of Conservation and Coastal Lands

SUBJECT: Early Consultation Request for Proposed Shoreline Erosion Mitigation and Bank Stabilization at the Kahana Sunset Condominiums

LOCATION: 4909 Lower Honoapi'ilani Road, 'Alaeloa, Lahaina, Maui, TMK: (2) 4-3-003:015

APPLICANT: Chris Hart & Partners, Inc. on behalf of Kahana Sunset AOAO

The Department of Land and Natural Resources (DLNR) Office of Conservation and Coastal Lands (OCCL) has reviewed the information provided regarding the early consultation request for proposed shoreline erosion mitigation and bank stabilization at the Kahana Sunset Condominiums, and we offer the following comments that should be addressed in the upcoming Environmental Assessment (EA):

It is unclear from the applicant's correspondence what the project will involve, where on the property the project will take place, and what buildings would be affected. There was no site plan provided with the letter.

The applicant was issued a Special Management Area (SMA) Emergency Permit by County of Maui Planning Department on February 4, 2010 to expedite construction of mitigation measures. We take note of three specific conditions of the SMA Emergency Permit: Condition Numbers 11, 14, and 15.

Condition No. 11 of the applicant's SMA Emergency Permit states: "That the Applicant submit the Shoreline Survey Map, completed in May 2009, to the Department of Land and Natural Resources, Board of Natural Resources for review and approval." The OCCL notes that, to date, the applicant has not submitted a shoreline survey map to DLNR for review and approval.

The applicant will require a certified shoreline to determine State/County jurisdiction. In addition, the OCCL notes that there appears to be a number of encroachments on the subject property that would need to be resolved prior to obtaining a certified shoreline.

Condition No. 14 of the applicant's SMA Emergency Permit states: "That the Kahana Sunset AOAO work with the State of Hawaii Department of Land and Natural Resources to resolve any existing shoreline violations." There is currently a violation case pending regarding alleged unauthorized structures fronting Building F. When does the applicant plan to resolve this violation?

Condition No. 15 of the applicant's SMA Emergency Permit states: "That the Kahana Sunset AOAO work cooperatively with the State of Hawaii Department of Land and Natural Resources and the Department to seek solutions to provide public access to the beach fronting the Kahana Sunset AOAO." What steps has the applicant taken to comply with this condition?

Thank you for providing the OCCL with the opportunity to provide comments on the proposed shoreline erosion mitigation and bank stabilization at the Kahana Sunset Condominiums. Should you have any questions, contact Audrey Barker of our office at (808) 587-0377.

→ Land Div.

LINDA LINGLE
GOVERNOR OF HAWAII

LAURA H. THIELEN
CHAIRPERSON
BOARD OF LAND AND NATURAL RESOURCES
COMMISSION ON WATER RESOURCE MANAGEMENT

RECEIVED
LAND DIVISION
2010 AUG 18 P 3:07
DEPT OF LAND & NATURAL RESOURCES STATE OF HAWAII

STATE OF HAWAII
DEPARTMENT OF LAND AND NATURAL RESOURCES
LAND DIVISION
POST OFFICE BOX 621
HONOLULU, HAWAII 96809

August 12, 2010

MEMORANDUM

TO: **DLNR Agencies:**
x Div. of Aquatic Resources
x Div. of ~~Boating & Ocean~~ Recreation
x Engineering Division
x Div. of Forestry & Wildlife
Div. of ~~State~~ Parks
x Commission on Water Resource Management
x Office of Conservation & Coastal Lands
x Land Division –Maui District/Ian
x Historic Preservation

Charlene

FROM: Charlene Unoki, Assistant Administrator
SUBJECT: Early Consultation Request for Proposed Shoreline Erosion Mitigation and Bank Stabilization at the Kahana Sunset Condominium
LOCATION: Island of Maui
APPLICANT: Chris Hart & Partners, Inc. on behalf of Kahana Sunset AOAO

Transmitted for your review and comment on the above referenced document. We would appreciate your comments on this document. Please submit any comments by September 5, 2010.

If no response is received by this date, we will assume your agency has no comments. If you have any questions about this request, please contact my office at 587-0433. Thank you.

Attachments

( ) We have no objections.
(X) We have no comments.
( ) Comments are attached.

Signed: Paul J Conry
Date: 8/17/10

LINDA LINGLE
GOVERNOR OF HAWAII

LAURA H. THIELEN
CHAIRPERSON
BOARD OF LAND AND NATURAL RESOURCES
COMMISSION ON WATER RESOURCE MANAGEMENT

STATE OF HAWAII
DEPARTMENT OF LAND AND NATURAL RESOURCES
LAND DIVISION

POST OFFICE BOX 621
HONOLULU, HAWAII 96809

August 12, 2010

RECEIVED
LAND DIVISION
2010 AUG 16 P 2:55
DEPT OF LAND & NATURAL RESOURCES
STATE OF HAWAII

MEMORANDUM

TO: **DLNR Agencies:**
x Div. of Aquatic Resources
x Div. of Boating & Ocean Recreation
x Engineering Division
x Div. of Forestry & Wildlife
__Div. of State Parks
x Commission on Water Resource Management
x Office of Conservation & Coastal Lands
x Land Division –Maui District/Ian
x Historic Preservation

FROM: Charlene Unoki, Assistant Administrator
SUBJECT: Early Consultation Request for Proposed Shoreline Erosion Mitigation and Bank Stabilization at the Kahana Sunset Condominium
LOCATION: Island of Maui
APPLICANT: Chris Hart & Partners, Inc. on behalf of Kahana Sunset AOAO

Transmitted for your review and comment on the above referenced document. We would appreciate your comments on this document. Please submit any comments by September 5, 2010.

If no response is received by this date, we will assume your agency has no comments. If you have any questions about this request, please contact my office at 587-0433. Thank you.

Attachments

( ) We have no objections.
(X) We have no comments.
( ) Comments are attached.

Signed: _____
Date: 8/16/10

AUG 17 10 PM 12:32 DOR DLU

LINDA LINGLE
GOVERNOR OF HAWAII

LAURA H. THIELEN
CHAIRPERSON
BOARD OF LAND AND NATURAL RESOURCES
COMMISSION ON WATER RESOURCE MANAGEMENT

RECEIVED
LAND DIVISION
2010 AUG 13 P 3:01
DEPT. OF LAND & NATURAL RESOURCES STATE OF HAWAII

STATE OF HAWAII
DEPARTMENT OF LAND AND NATURAL RESOURCES
LAND DIVISION

POST OFFICE BOX 621
HONOLULU, HAWAII 96809

August 12, 2010

RECEIVED
COMMISSION ON WATER RESOURCE MANAGEMENT
2010 AUG 13 AM 11:51

MEMORANDUM

TO: **DLNR Agencies:**
x Div. of Aquatic Resources
x Div. of Boating & Ocean Recreation
x Engineering Division
x Div. of Forestry & Wildlife
Div. of State Parks
x Commission on Water Resource Management
x Office of Conservation & Coastal Lands
x Land Division –Maui District/Ian
x Historic Preservation

FROM: Charlene Unoki, Assistant Administrator
SUBJECT: Early Consultation Request for Proposed Shoreline Erosion Mitigation and Bank Stabilization at the Kahana Sunset Condominium
LOCATION: Island of Maui
APPLICANT: Chris Hart & Partners, Inc. on behalf of Kahana Sunset AOAO

Transmitted for your review and comment on the above referenced document. We would appreciate your comments on this document. Please submit any comments by September 5, 2010.

If no response is received by this date, we will assume your agency has no comments. If you have any questions about this request, please contact my office at 587-0433. Thank you.

Attachments

(✓) We have no objections.
( ) We have no comments.
( ) Comments are attached.

Signed: RK Chong
Date: 8/13/10

FILE ID: MD. 2714.
DOC ID: 67931
6784✓

LINDA LINGLE
GOVERNOR

BRENNON T. MORIOKA
DIRECTOR

Deputy Directors
MICHAEL D. FORMBY
FRANCIS PAUL KEENO
JIRO A. SUMADA

STATE OF HAWAII
DEPARTMENT OF TRANSPORTATION
869 PUNCHBOWL STREET
HONOLULU, HAWAII 96813-5097

IN REPLY REFER TO:

STP 8.0211

September 1, 2010

Mr. Matthew M. Slepin
Senior Associate Planner
Chris Hart & Partners, Inc.
115 N. Market Street
Wailuku, Hawaii 96793-1717

Dear Mr. Slepin:

Subject: Kahana Sunset Condominiums Shoreline Erosion Mitigation and Bank Stabilization Early Consultation for Draft Environmental Assessment (DEA), Special Management Area Use Permit and Shoreline Setback Variance

Thank you for requesting the State Department of Transportation's (DOT) review of the subject project.

DOT understands that the applicant proposes to construct a permanent erosion mitigation and bank stabilization project to mitigate an erosion problem that is presently threatening a portion of the Kahana Sunset Condominium complex. The Kahana Sunset Condominium is located on Lower Honoapiilani Highway.

Given the project's location, DOT does not anticiapte any significant, adverse impacts to its nearby transportation facilties (Honoapiilani Highway). However, the applicant should be informed that a permit is required from DOT Highways Division, Maui District Office, to transport oversized and overweight equipment/loads within the State highway facilities.

DOT appreciates the opportunity to provide comments. If there are any other questions, please contact Mr. David Shimokawa of the DOT Statewide Transportation Planning Office at telephone number (808) 587-2356.

Very truly yours,

BRENNON T. MORIOKA, Ph.D., P.E.
Director of Transportation

cc: Jann 09/14/43

RECEIVED
SEP 9 8 2010
CHRIS HART & P
Landscape A

DEPARTMENT OF THE ARMY
U.S. ARMY CORPS OF ENGINEERS, HONOLULU DISTRICT
FORT SHAFTER, HAWAII 96858-5440

REPLY TO
ATTENTION OF:

August 18, 2010

Regulatory Branch

File Number **POH-2010-00206**

Matthew Slepin
Senior Associate
Chris Hart & Partners, Inc.
115 N. Market Street
Wailuku, HI 96793-1717

Dear Mr. Slepin:

This responds to your request for written comments for a draft Environmental Assessment (dEA) which shall address activities and impacts for a proposed shoreline and erosion mitigation and bank stabilization project. The location of the proposed project is at 4909 Lower Honoapiilani Road, Alaeloa, Lahaina, Maui on the parcel identified as TMK 243003015.

The dEA for the proposed seawall repair project will be reviewed pursuant to Section 10 of the Rivers and Harbors Act of 1899 (Section 10) and Section 404 of the Clean Water Act (Section 404). Section 10 requires that a Department of Army (DA) permit be obtained for certain structures or work in or affecting navigable waters of the United States (U.S.), prior to conducting the work (33 U.S.C. 403). Navigable waters of the U.S. are those waters subject to the ebb and flow of the tide shoreward to the mean high water mark, and/or other waters identified as navigable by the Honolulu District. In addition, a Section 10 permit is required for structures or work outside this limit if they affect the course, location, or condition of the waterbody as to its navigable capacity.

Section 404 requires that a DA permit be obtained for the placement or discharge of dredged and/or fill material into waters of the U.S., including wetlands, prior to conducting the work (33 U.S.C. 1344). The area of Corps jurisdiction under Section 404 extends to the Mean High Tide Line (MHTL) for navigable waters like the Pacific Ocean, and to the upland boundary of any adjacent wetlands.

Initial information indicates that the work proposed at the sea wall location may be in, above, and contiguous to the Pacific Ocean, a navigable water of the U.S. A presentation of alternatives to accomplish the work should be considered. The dEA should provide sufficient detail about the specific methods of construction and associated ground disturbing and in-water activities that may likely take place, or be avoided. It is recommended that the applicant, Kahana Sunset AOAO, consult with our office BEFORE any in-water activities take place to determine if a DA permit may, or may not be required. Upon our receipt of site-specific construction methods and a Best Management Practices Plan, we will provide an Approved geographic Jurisdictional Determination that jurisdictional waters of the U.S. are present and a determination that a DA

RECEIVED
AUG 20 2010
CHRIS HART & PARTNERS, INC.
Landscape Architecture and Planning
CC'Jason 09/143

permit for Section 10 and Section 404 activities may, or may not be, required for activities associated with the proposed construction of the seawall Project.

Thank you for your consideration of potential impacts to the aquatic environment of the Lahaina watershed. Please contact Mr. Farley Watanabe of my staff at 808-438-7701, facsimile 808-438-4060, or by email at Farley.K.Watanabe@usace.army.mil if you have any questions or need additional information. Please refer to File Number **POH-2010-00206** in any future correspondence with us.

Sincerely,

George P. Young, P.E.
Chief, Regulatory Branch

August 9, 2010

To Whom It May Concern:

Regarding the letter from your office dated August 2 to neighboring property owners which I received on the 6th of August and had just until the 9th to respond.
I strongly object to any potential change of the proposed zoning which could lead to the modification of the view planes from neighboring properties. In addition this change in zoning could increase density, traffic, noise, and other nuisances.

It is one thing to repair a retaining seawall when necessary but a completely different matter when looking to change the zoning at the same time.

Sincerely,

Kim Smith
121 Puuohu Rd #7
Napili Villas
(808) 669-5450

APPENDIX B
Shoreline Approvals

April 15, 1975

Mr. Norman Saito
Civil Engineer
Kahului Building, Suite 350
P.O. Box 1887
Kahului, Maui 96732

Dear Mr. Saito:

Re: Request for approval of plans to construct a concrete sea/retaining wall at the Kahana Sunset Condominium, TMK 4-3-03:15, Alaeloa, Lahaina, Maui.

Please be advised that your plan for the above sea/retaining wall received on April 8, 1975, is hereby approved in accordance with Section 13(a) of the County of Maui Shoreline Setback Rules and Regulations, and subject to the following conditions:

1. That said approval is for construction within the Shoreline Setback, only, and that all construction seaward of the shoreline as verified on November 15, 1974 shall be subject to review and approval by other appropriate governmental agencies.

2. That specific measures shall be taken to stabilize the shoreline by diverting storm runoff from both the ground surface and the adjacent building.

3. That full compliance with all Federal, State and County requirements shall be rendered.

Please be advised that the proposed retaining wall may not be a satisfactory and permanent solution to the existing situation. However, due to the immediate hazards created by the existing problem, we are approving the subject request. We recommend that an appropriate solution be found.

Thank you for your cooperation. If additional clarification is required, please contact Mr. Chris Hart of the Planning Department staff.

Yours very truly,

HOWARD K. NAKAMURA
Planning Director

cc Mr. J. Shaw
cc Mr. S. Goshi
cc Mr. S. Eastman

PLANNING COMMISSION
Charles Ota, Chairman
Patrick Kawano, Vice-Chairman
Mary Cabuslay
Marvin Romme
Rogelio Tacdol
Wesley Wong
Harlow Wright
Wayne Uemae, Ex-Officio
Tatsumi Imada, Ex-Officio

Elmer F. Cravalho
Mayor

Tosh Ishikawa
Planning Director

Yoshikazu "Zuke" Matsui
Deputy Planning Director

COUNTY OF MAUI
PLANNING DEPARTMENT
200 S. HIGH STREET
WAILUKU, MAUI, HAWAII 96793

August 31, 1978

Mr. Michael S. Downing
Downing & Associates Engineers
Maui Professional Center, Suite 310
2180 Main Street
Wailuku, Maui 96793

Dear Mr. Downing:

Re: Shoreline Setback Application (Mr. Michael S. Downing, Engineer on behalf of Kahana Sunset) - proposed erosion control project - placement of approximately 65 cubic yards of concrete in the face of an existing 18 ft. high bank as a method of controlling the undermining of same at the Kahana Sunset residential condominium project, TMK 4-3-03:15 Alaeloa, Lahaina, Maui

Please be advised that those portions of the proposed erosion control project landward of the shoreline certified on June 23, 1978, and in accordance with plans dated June 16, 1978, as transmitted by letter dated August 9, 1978, are hereby exempt from the State of Hawaii Environmental Impact Regulations pursuant to Section 1:33, and approved for construction in accordance with Section 13(a) of the County of Maui Shoreline Setback Rules and Regulations subject to the following conditions:

1. That full compliance shall be rendered with the conditions established in granting a Minor Permit pursuant to Section 12A of the Interim Coastal Zone Management Rules and Regulations of the County of Maui.

2. That for this permit no construction, operation of equipment, storage of materials, excavation or deposition of excavated material shall occur seaward of the certified shoreline.

3. That all proposals for work seaward of the certified shoreline shall be submitted to the State of Hawaii Department of Land and Natural Resources and the U.S. Army Corps of Engineers for appropriate review and action.

9/6/78 $35.00 check returned to Mike Downing

4. That any and all construction including grading and paving within the required forty (40) ft. shoreline setback shall be prohibited

5. That the existing grade and groundcover at the top of the bank shall be maintained.

6. That the applicant, its successors and assigns, shall defend, indemnify and hold the County of Maui harmless from and against any loss, liability, claim or demand arising out of this permit.

7. That full compliance with all Federal State and County requirements shall be rendered.

Thank you for your cooperation. If additional clarification is required, please contact this office.

Yours very truly,

TOSH ISHIKAWA
Planning Director

WAYNE UEMAE
Director of Public Works

cc EQC
cc U.S. Army Corps of Engineers
cc Mr. W. Y. Thompson, DLNR
cc Mr. A. Haake
cc Mr. W. Uemae
cc Mr. E. Kagehiro
cc Mr. R. Figueiroa
cc Mr. C. Hart

GEORGE R. ARIYOSHI
GOVERNOR OF HAWAII

RECEIVED
OCT 19 2 30 PM '78
DEPT. OF PLANNING
COUNTY OF MAUI

W. Y. THOMPSON, Chairman
BOARD OF LAND & NATURAL RESOURCES

EDGAR A. HAMASU
DEPUTY TO THE CHAIRMAN

DIVISIONS:
CONVEYANCES
FISH AND GAME
FORESTRY
LAND MANAGEMENT
STATE PARKS
WATER AND LAND DEVELOPMENT

STATE OF HAWAII
DEPARTMENT OF LAND AND NATURAL RESOURCES
P. O. BOX 621
HONOLULU, HAWAII 96809

October 16, 1978

File No.: MA-8/2/78-1077
180-Day Exp. Date: 1/29/79

Mr. Michael S. Downing
Kahana Sunset Association
Maui Professional Center #310
P. O. Box 607
Wailuku, Maui, HI 96793

Dear Mr. Downing:

Conservation District Use Application
for Shoreline Erosion Protection System
at Alaeloa, Lahaina, Maui

We are pleased to inform you that the Board of Land and Natural Resources at its meeting of October 13, 1978, under agenda Item H-8, approved your application subject to the following conditions:

1. The applicant shall comply with applicable provisions of Section 6 of Departmental Regulation No. 4;

2. Inclusion of hold harmless condition for all work to be awarded by contract;

3. The applicant shall obtain appropriate authorization through the Division of Land Management, DLNR, for the use of State lands since this approval is for the use of conservation lands only;

4. In the event unanticipated historical or archaeological remains are encountered by the effectuation of the proposed use, the applicant shall immediately contact the Historic Preservation Office at 548-6408;

5. Precautionary measures shall be taken to prevent pollution of coastal waters by accidental spillage of petroleum products, debris, or other construction related products during construction;

HELP TO CLEAN OUR LAND, STATE OF HAWAII

6. No materials shall be placed on or taken from conservation districts outside the project area;

7. All areas disturbed by work and work related activities shall be restored to acceptable conditions; and

8. Appropriate measures shall be taken to minimize inconveniences and hazards to neighboring residences and the public in general.

Should you have questions on any of these conditions, please contact our Planning Office at 548-7837.

Very truly yours,

W. Y. THOMPSON
Chairman of the Board

cc: Maui Board Member
Maui District Land Agent
U. S. Fish & Wildlife Service
U. S. Corps of Engineers
Department of Health
Office of Environmental
Quality Control
Environmental Quality Commission
COM/Planning Department

Permit Summary

Permit:	SM5 960005	**Flags:**	NO
Description:	SMA MINOR PERMIT EXEMPT		
Project:	KAHANA SUN KAHANA SUNSET AOAO		
Status:	DONE	**Entered:**	30-Jun-1997
Issued:	30-Jun-1997	**Completed:**	05-Jun-1996
Decision:	NR		
Expiration:	30-Jun-1997	**Last Renewal:**	
Location Desc.:			

Parcel Information		
Address	**TMK**	
4909 L HONOAPIILANI RD	2430030150000	**GIS Parcel**

Scope of Work
REPAIRS TO EXISTING PERMITTED WALL, KAHANA.

Professionals / Contractors
There are no professionals for this application.

[QUANTITIES]

Structure Classification			
Initial Value:	$0.00	**Calculated Value:**	$0.00
Standard Plan:		**Public Project:**	
# of Structures:		**# of Res. Units:**	
Total Floor Area:			
Model:			

Occupancy Group	Construction Type	Structure Class
None attached.	None attached.	None attached.

Inspections							
					CORR		
Inspection	**Result**	**Completed Date**	**Completed By**	**Schedule**	**O**	**C**	**N**
There are no inspections for this permit.							

Activities								
		Nodes						
Description	**Assigned**	**Beg**	**End**	**Dur.**	**Est. Completion**	**Target End**	**Decision**	**Decision Date**
There are no activities for this application.								

Permit Flags		
Flag	**Description**	**Status**
There are no flags on this application		

Permit Summary

Permit:	SSA 960002	**Flags:**	NO
Description:	SHORELINE SETBACK APPROVAL		
Project:	KAHANA SUN KAHANA SUNSET AOAO		
Status:	DONE	**Entered:**	26-Jun-1997
Issued:	26-Jun-1997	**Completed:**	05-Jun-1996
Decision:	A W/COND		
Expiration:	26-Jun-1997	**Last Renewal:**	
Location Desc.:			

Parcel Information		
Address	**TMK**	
4909 L HONOAPIILANI RD	2430030150000	**GIS Parcel**

Scope of Work
REPAIRS TO EXISTING PERMITTED WALL, KAHANA.

Professionals / Contractors
There are no professionals for this application.

[QUANTITIES]

Structure Classification			
Initial Value:	$0.00	**Calculated Value:**	$0.00
Standard Plan:		**Public Project:**	
# of Structures:		**# of Res. Units:**	
Total Floor Area:			
Model:			

Occupancy Group	Construction Type	Structure Class
None attached.	None attached.	None attached.

Inspections							
					CORR		
Inspection	**Result**	**Completed Date**	**Completed By**	**Schedule**	**O**	**C**	**N**
There are no inspections for this permit.							

Activities								
		Nodes						
Description	**Assigned**	**Beg**	**End**	**Dur.**	**Est. Completion**	**Target End**	**Decision**	**Decision Date**
There are no activities for this application.								

Permit Flags		
Flag	**Description**	**Status**
There are no flags on this application		

JAMES "KIMO" APANA
Mayor

JOHN E. MIN
Director

CLAYTON I. YOSHIDA
Deputy Director

COUNTY OF MAUI
DEPARTMENT OF PLANNING

January 13, 2003

Mr. Doug Pitzer
Pitzer Built Construction, LLC
219 Kahana Ridge Road
Lahaina, Maui, Hawaii 96761

Dear Mr. Pitzer:

RE: Special Management Area (SMA) Emergency Permit – For the Repair of an Existing Seawall at the Kahana Sunset, TMK: 4-3- 003: 015, Napili, Maui, Hawaii (SM3 2003/0001)

In accordance with the Special Management Area Rules for the Maui Planning Commission, Section 12-202-16, a determination has been made relative to the above-referenced project that the proposed action is immediately required to prevent substantial physical harm to the public safety and welfare. As such, the Maui Planning Department (Department) finds that the criteria set forth in Sections 205A-22 and 30, Hawaii Revised Statutes (HRS), as amended, have been met.

Additionally, the proposed action was reviewed pursuant to Sections 12-5-11 and 12-5-12 of the Rules of the Maui Planning Commission Relating to the Shoreline Area. The Department finds that the project entails repairs to an existing, permitted structure, which do not enlarge the structure nor intensify the use of the structure.

In consideration of the above determinations, you are hereby granted a Special Management Area Emergency Permit for the above-referenced activities, subject to the following conditions:

1. That only sandbags shall be used to stabilize the plywood required for the concrete pour. Rock rip-rap shall not be used as indicated on plans.

2. That only beach-quality sand from inland sources shall be used to fill the bags.

3. That a sufficient quantity of sandbags shall be used to prevent concrete from entering the ocean during pouring.

4. That the concrete shall be poured only during low tide and wave conditions.

5. That the sandbags shall be removed as soon as possible after the concrete has cured. The sandbags SHALL NOT be emptied onto the beach prior to removal.

6. That this Special Management Area Emergency Permit shall be valid for a period of 180 days from the date of this letter.

7. That full compliance with all other applicable governmental requirements shall be rendered.

Thank you for your cooperation. If additional clarification is required, please contact Matt Niles, Staff Planner, of this office at 270-7735.

Sincerely,

MICHAEL W. FOLEY
Planning Director

MWF:MCN:lar
cc: Wayne Boteilho, Deputy Planning Director
Clayton I. Yoshida, AICP, Planning Program Administrator
Gilbert S. Coloma-Agaran, (DPWEM)
Aaron H. Shinmoto, PE, Planning Program Administrator (2)
John Nakagawa, Office of Planning, CZM Program
Matt Niles, Staff Planner
Joe Alueta, Staff Planner
DSA (2)
Project File
02/CZM File
General File
K:\WP_DOCS\PLANNING\SM3\KahanaSunset\emergency.wpd

CHARMAINE TAVARES
Mayor

JEFFREY S. HUNT
Director

KATHLEEN ROSS AOKI
Deputy Director

COUNTY OF MAUI
DEPARTMENT OF PLANNING

December 29, 2009

CERTIFIED MAIL - #7007 2560 0001 7799 7922

Ms. Laura Valenzuela
General Manager, AOAO
Kahana Sunset
4909 Lower Honoapiilani Highway
Lahaina, Hawaii 96761

Dear Ms. Valenzuela:

SUBJECT: SPECIAL MANAGEMENT AREA (SMA) EMERGENCY PERMIT; --- VERBAL PERMISSION TO COMPLETE TEMPORARY EMERGENCY PROTECTIVE MEASURES AND REPAIRS TO BUILDING "F" FOUNDATION AND ADJACENT SEAWALL AT THE KAHANA SUNSET, 4909 LOWER HONOAPIILANI HIGHWAY, LAHAINA, MAUI, HAWAII; TMK: 4-3-003:015 (SM3 2009/0005) (RFC 2009/0280)

The purpose of this letter is to confirm in writing that, on December 23, 2009, the Department of Planning (Department) reviewed your request for and has verbally granted to the Kahana Sunset AOAO a SMA Emergency Permit for the subject action, pursuant to the *Special Management Area Rules for the Maui Planning Commission*, Section 12-202-16, Special Management Area Emergency Permit Procedures.

Pursuant to Section 12-202-16(b) of the SMA rules, the Department verbally approved the SMA Emergency Permit, SM3 2009/0005, on December 23, 2009, at 2:41 P.M., in an email to Mr. Kiumars Siah, Consultant, and Ms. Laura Valenzuela, Applicant and General Manager, Kahana Sunset, AOAO. The Applicant's telephone number is (808) 669-8011.

According to Section 12-202-16(c) of the SMA rules, Kahana Sunset AOAO shall submit a SMA Assessment Application within 10 days of receipt of this letter to the Department for review and assessment. The Department will complete an environmental assessment for the proposed action and determine if any of the following permits are required: 1) Special Management Area Major Application; 2) Shoreline Setback Assessment Application; and a 3) Shoreline Setback Variance Application; as well as required building permits for this work.

In verbally granting the subject proposed action, the Department understands that:

1. The applicant has provided a Shoreline Survey to the Department, completed on May 2, 2009, by Valencia Land Surveying, and that the proposed action is taking place within the Shoreline Setback Area and under the *Shoreline Rules for the Maui Planning Commission*;

2. According to the professional engineering report submitted to the Department on December 14, 2009, by Dr. Kiumars Siah, P.E., Hawaii Licensed Structural Engineer, and according to a site visit conducted by Mr. Jeffrey Dack, Department of Planning, and Mr. Scott Sauers, Department of Public Works, on December 18, 2009, the foundation of Building "F" is in danger of imminent collapse due to undermining of the foundation by ongoing coastal wave erosion. Attachment I is photographs taken by the Department on December 18, 2009, demonstrating a threat to public health and safety and potential physical harm to the foundation of Building F;

3. The SMA Emergency Permit is to complete temporary emergency protective measures to Building "F", as presented in the Option "B" schematic drawing by Dr. Kiumars Siah, in order to protect the building foundation from further undermining and potential collapse. Attachment II is Option B, a schematic drawing of the temporary emergency protective measure for a portion of the length of Building F. Three alternative temporary emergency protective measures were considered and discussed between the engineer and the Department; and

4. The threatened building is on a shoreline property, within the Shoreline Setback Area[1], that has experienced an ongoing sinkhole that collapsed approximately one-half the length of the oceanfront lanai, or 60 feet of lanai in length, due to a sinkhole in the sand substrate caused by severe wave action during large wave episodes during December 2009. Due to the emergency situation and threat to life and safety, the occupants of the entire building have been evacuated on or about December 3, 2009, and have remained vacated pending emergency stabilization of the building foundation. Therefore, the Department finds that the proposed action is immediately required to prevent substantial physical harm to the public safety and welfare and to protect Building "F" from further damage.

---

[1] The Shoreline Setback Area for the property has been determined to be the area between the high-water mark to approximately eighty (80) feet mauka from the shoreline, applying the Average Lot Depth Method, and using the uncertified Shoreline Survey produced by Valencia Land Surveying, of the shoreline as observed on May 2, 2009 at 4:00 PM.

Furthermore, the Department has determined that:

1. The proposed action is a "development;"

2. The proposed project has a valuation of more than $125,000.00; ($150,000.00 to $200,000.00 estimate)

3. The project meets the criteria set forth in Sections 205A-22 and 30, Hawaii Revised Statutes (HRS), as amended; and

4. With Construction Best Management Practices applied to protect the shoreline and marine environment, will not have an adverse or cumulative substantial impact on the environment.

In consideration of the above determinations, you are hereby granted verbal permission to conduct the said temporary emergency protective measures to Building "F," subject to the following conditions:

1. That the emergency protective measures will be completed as presented in Option B, as presented in your December 22, 2009 email, and as with specifications as drawn in Attachment II.

2. That the work is to be supervised by either Dr. Kiumars Siah, or by a licensed engineer designated by Dr. Siah.

3. That appropriate filtration measures to separate petroleum products and other potential contaminants shall be incorporated into the project's drainage plan. Such filtration measures may include biological and/or natural means of separation and remediation where applicable.

4. That best management practices shall be implemented to insure water quality and marine resources are protected. No construction materials should be stockpiled in the aquatic environment. All construction-related materials should be free of pollutants and placed or stored in ways to avoid or minimize disturbance. No debris, petroleum products or deleterious materials or wastes should be allowed to fall, flow, leach, or otherwise enter near shore waters. Any turbidity and siltation generated from activities proposed at the site should be minimized and contained in the immediate vicinity of construction through the use of effective silt containment devices. Construction during adverse weather conditions should be curtailed to minimize the potential for adverse water quality impacts.

5. That no materials, including excavated sand, shall be placed in the shoreline area.

6. That a staging area for the construction project be located mauka of Building "F," outside of the shoreline setback area.

7. That if human burials are identified, work will immediately cease, the State Historic Preservation Division (SHPD) Burial Sites Program/Culture and History Branch (243-4640), Maui SHPD Archaeology Branch (243-1285), Oahu SHPD (692-8015) and the Maui/Lanai Islands Burial Council will be notified.

8. That the Applicant provide the Department with the legal status of all structures for the property, including all the seawalls, within 10 days of receipt of this letter.

9. That under the SMA Rules, please note this fix is only a temporary solution to be removed within 180 days from date of approval, or no later than June 23, 2010.

10. That the Applicant submit the Shoreline Survey Map, completed in May 2009, to the Department of Land and Natural Resources, Board of Natural Resources for review and approval.

11. That Kahana Sunset AOAO submits a SMA Assessment Application within 10 days of receipt of this letter to the Department for review and assessment. From the SMA Assessment Application, the Department will complete an environmental assessment for the proposed action and determine if any of the following permits: 1) Special Management Area Major Permit Application, 2) Shoreline Setback Assessment Application, and a 3) Shoreline Setback Variance Application (requiring an Environmental Assessment) are required as well as seek building permits for this work. Rules for Variances are found in the *Shoreline Rules for the Maui Planning Commission,* section 12-203-14 & 15.

12. That the Kahana Sunset AOAO work with the Department to develop project plans, prepared by a licensed engineer, in order to provide alternative permanent solutions to the ongoing problem.

13. That full compliance with all other applicable governmental requirements shall be rendered.

14. That the AOAO Board of Directors, consultants, and contractors for this project should become very familiar with the *Shoreline Rules for the Maui Planning Commission* to understand limitations to work in the Shoreline Setback Area and to understand the high priority for protecting the ocean and marine resources during all construction activities.

Thank you for your cooperation. If additional clarification is required, please contact Staff Planner Jim Buika at james.buika@mauicounty.gov or by phone 270-6271.

Sincerely,

for JEFFREY S. HUNT, AICP
Planning Director

Attachments
xc: Clayton I. Yoshida, AICP, Planning Program Administrator
Aaron H. Shinmoto, PE, Planning Program Administrator (2)
James A. Buika, Staff Planner
Scott Sauers, Department of Public Works
Development Services Administration
Office of Planning
Project File
General File

JSH:JAB:nt
K:\WP_DOCS\PLANNING\SM3\2009\0005_KahanaSunset\Approvals\Approval.doc

Attachment I: Building "F" lanai failure and exposed foundation

Unreinforced seawall fronting collapsed lanai area of Building F

Attachment II: Profile Schematic of Temporary Emergency Protective Measure (left to right, building to seawall)

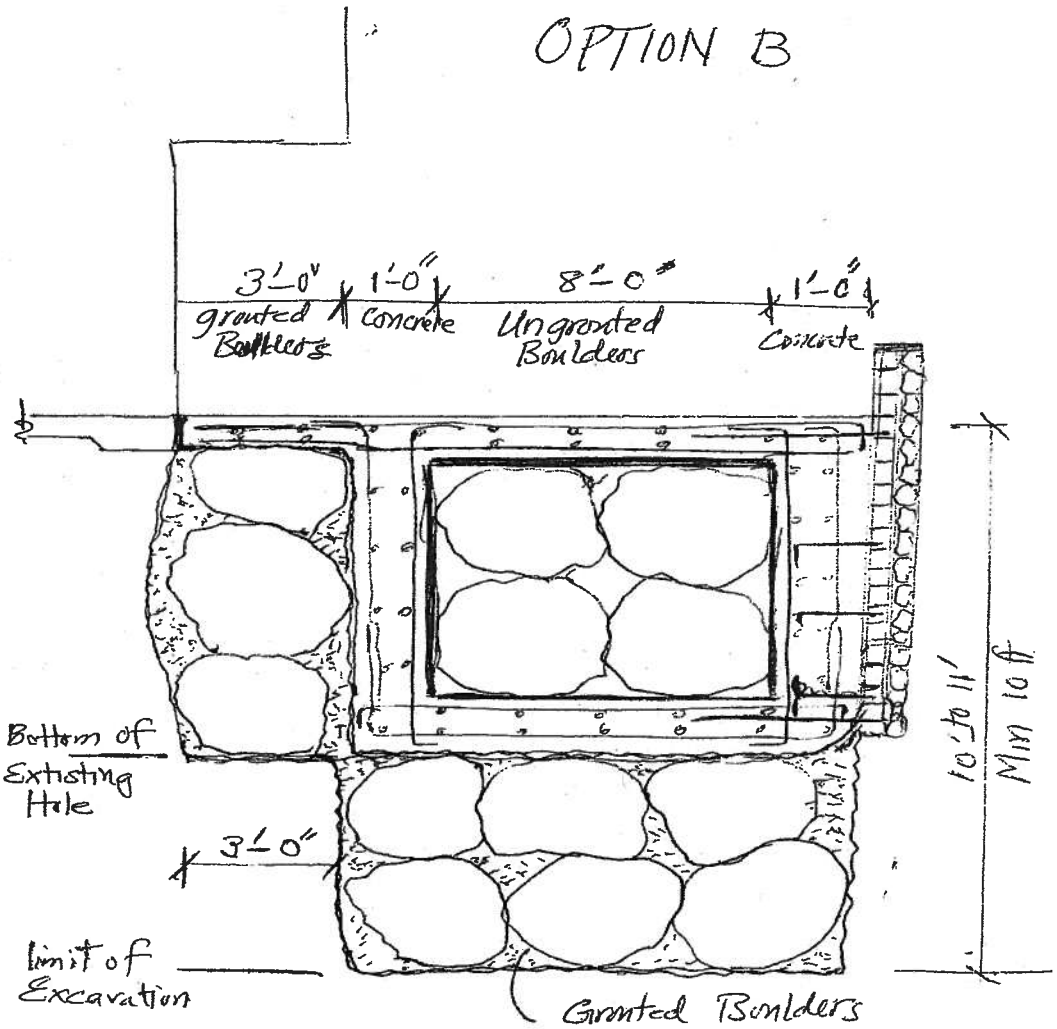

CHARMAINE TAVARES
Mayor

JEFFREY S. HUNT
Director

KATHLEEN ROSS AOKI
Deputy Director

COUNTY OF MAUI
DEPARTMENT OF PLANNING

February 4, 2010

CERTIFIED MAIL - #7008 0500 0002 0444 7454

Ms. Laura Valenzuela
General Manager, AOAO
Kahana Sunset
4909 Lower Honoapiilani Highway
Lahaina, Hawaii 96761

Dear Ms. Valenzuela:

SUBJECT: SPECIAL MANAGEMENT AREA (SMA) EMERGENCY PERMIT; VERBAL PERMISSION TO COMPLETE TEMPORARY EMERGENCY PROTECTIVE MEASURES AND REPAIRS TO BUILDING "A" FOUNDATION AND ADJACENT SEAWALL AT THE KAHANA SUNSET, 4909 LOWER HONOAPIILANI HIGHWAY, LAHAINA, MAUI, HAWAII; TMK: 4-3-003:015 (SM3 2010/0001)

The purpose of this letter is to confirm in writing that, on January 28, 2010, the Department of Planning (Department) reviewed your request for an emergency permit to proceed with temporary protective measures for Building A and has granted to the Kahana Sunset AOAO an SMA Emergency Permit for the subject action, pursuant to the *Special Management Area Rules for the Maui Planning Commission*, Section 12-202-16, Special Management Area Emergency Permit Procedures.

Pursuant to Section 12-202-16(b) of the SMA rules, the Department verbally approved the SMA Emergency Permit, SM3 2010/0001, on January, 28, 2010, at 1:00 P.M., on site to Dr. Kiumars Siah, Consultant, and Ms. Laura Valenzuela, Applicant and General Manager, Kahana Sunset, AOAO. The Applicant's telephone number is (808) 669-8011.

Please note that this is a second Special Management Area Emergency Permit granted by the Department to Kahana Sunset AOAO. The previous SMA Emergency Permit was SM3 2009/0005 for temporary emergency repairs for Building F. The Department has been aware of this ongoing emergency situation since the analysis and determination of the first SMA Emergency Permit.

According to Section 12-202-16(c) of the SMA rules, Kahana Sunset AOAO shall submit a SMA Assessment Application within 10 days of receipt of this letter to the Department for review and assessment. The Department will complete an environmental assessment for the

proposed action and determine if any of the following permits are required: 1) Special Management Area Major Application; 2) Shoreline Setback Assessment Application; and a 3) Shoreline Setback Variance Application; as well as required building permits for this work.

In granting the subject proposed action, the Department understands that:

1. The applicant has provided a Shoreline Survey to the Department, completed on May 2, 2009, by Valencia Land Surveying, and that the proposed action is taking place within the Shoreline Setback Area and under the *Shoreline Rules for the Maui Planning Commission*;

2. According to the professional engineering letter dated December 20, 2009, by Dr. Kiumars Siah, P.E., Hawaii Licensed Structural Engineer, and according to a site visit conducted by Mr. James Buika, Department of Planning, Mr. Dolan Eversole, Sea Grant Extension Program, and Mr. Matthew Slepin, Chris Hart & Partners, Inc., the foundation of Building "A" is in danger of imminent collapse due to undermining of the foundation by ongoing coastal wave erosion. Attachment I is two photographs taken by the Department on January 28, 2010, demonstrating a potential threat to public health and safety and potential physical harm to the foundation of Building A;

3. The SMA Emergency Permit is to complete temporary emergency protective measures to Building "A", as presented in the December 20, 2009 propose scope of work by Dr. Kiumars Siah, in order to protect the building foundation from further undermining and potential collapse. Attachment II is the letter dated December 20, 2009, from AAA Structural Engineering to the Department that describes the proposed scope of work as discussed between the engineer and the Department;

4. The Applicant will provide the Department with further schematic drawings (site plan and cross section drawing) of the proposed temporary emergency protective measures for review and approval by the Department prior to proceeding with the work; and

5. The threatened building is on a shoreline property, within the Shoreline Setback Area[1], for which the existing sand substrate behind the seawall that is supporting Building A, has been partially undermined. The situation is impossible to fully analyze without further excavation and investigation behind the existing seawall, in an area mauka of the shoreline. This undermining was caused by severe

[1] The Shoreline Setback Area for the property has been determined to be the area between the high-water mark to approximately eighty (80) feet mauka from the shoreline, applying the Average Lot Depth Method, and using the uncertified Shoreline Survey produced by Valencia Land Surveying, of the shoreline as observed on May 2, 2009 at 4:00 PM.

wave action during large wave episodes during December 2009. Due to the emergency situation and threat to life and safety, some of the occupants of Building A have been evacuated and have remained vacated pending emergency stabilization of the building foundation. Therefore, the Department finds that the proposed action is immediately required to prevent substantial physical harm to the public safety and welfare and to protect Building "A" from further damage.

Furthermore, the Department has determined that:

1. The proposed action is a "development;"

2. The proposed project has a valuation of more than $125,000.00; ($150,000.00 to $200,000.00 estimate)

3. The project meets the criteria set forth in Sections 205A-22 and 30, Hawaii Revised Statutes (HRS), as amended; and

4. With Construction Best Management Practices applied to protect the shoreline and marine environment, will not have an adverse or cumulative substantial impact on the environment.

In consideration of the above determinations, you are hereby granted permission to conduct the said temporary emergency protective measures to Building "A," subject to the following conditions:

1. That the emergency protective measures will be completed as described and represented in the attached December 20, 2009, letter from AAA Structural Engineering.

2. That the applicant provide the Department with a schematic drawing cross section and site plan with specifications indicated, for review and approval by the County within 10 days of receipt of this letter.

3. That the work is to be supervised by either Dr. Kiumars Siah, or by a licensed engineer designated by Dr. Siah.

4. That appropriate filtration measures to separate petroleum products and other potential contaminants shall be incorporated into the project's drainage plan. Such filtration measures may include biological and/or natural means of separation and remediation where applicable.

5. That Best Management Practices (BMPs) shall be implemented to insure water quality and marine resources are protected. No construction materials should be

stockpiled in the aquatic environment. All construction-related materials should be free of pollutants and placed or stored in ways to avoid or minimize disturbance. No debris, petroleum products or deleterious materials or wastes should be allowed to fall, flow, leach, or otherwise enter near shore waters. Any turbidity and siltation generated from activities proposed at the site should be minimized and contained in the immediate vicinity of construction through the use of effective silt containment devices. Construction during adverse weather conditions should be curtailed to minimize the potential for adverse water quality impacts.

6. That no materials, including excavated sand, shall be placed in the shoreline area.

7. That a staging area for the construction project be located mauka of Building "F," outside of the shoreline setback area.

8. That if human burials are identified, work will immediately cease, the State Historic Preservation Division (SHPD) Burial Sites Program/Culture and History Branch (243-4640), Maui SHPD Archaeology Branch (243-1285), Oahu SHPD (692-8015) and the Maui/Lanai Islands Burial Council will be notified.

9. That the Applicant provides the Department with the legal status of all structures for the property, including all the seawalls, within 10 days of receipt of this letter.

10. That under the SMA Rules, please note this fix is only a temporary solution to be removed within 180 days from date of construction approval, but no later than December 31, 2010.

11. That the Applicant submit the Shoreline Survey Map, completed in May 2009, to the Department of Land and Natural Resources, Board of Natural Resources for review and approval.

12. That Kahana Sunset AOAO submits a SMA Assessment Application within ten (10) days of receipt of this letter to the Department for review and assessment. From the SMA Assessment Application, the Department will complete an environmental assessment for the proposed action and determine if any of the following permits: 1) Special Management Area Major Permit Application, 2) Shoreline Setback Assessment Application, and a 3) Shoreline Setback Variance Application (requiring an Environmental Assessment) are required as well as seek building permits for this work. Rules for Variances are found in the *Shoreline Rules for the Maui Planning Commission,* section 12-203-14 & 15.

13. That the Kahana Sunset AOAO work with the Department to develop project plans, prepared by a licensed engineer, in order to provide alternative permanent solutions to the ongoing problem.

14. That the Kahana Sunset AOAO work with the State of Hawaii Department of Land and Natural Resources to resolve any existing shoreline violations.

15. That the Kahana Sunset AOAO work cooperatively with the State of Hawaii Department of Land and Natural Resources and the Department to seek solutions to provide public access to the beach fronting the Kahana Sunset AOAO.

16. That full compliance with all other applicable governmental requirements shall be rendered.

17. That the AOAO Board of Directors, consultants, and contractors for this project should become very familiar with the *Shoreline Rules for the Maui Planning Commission* to understand limitations to work in the Shoreline Setback Area and to understand the high priority for protecting the ocean and marine resources during all construction activities.

Thank you for your cooperation. If additional clarification is required, please contact Staff Planner Jim Buika at james.buika@mauicounty.gov or by phone 270-6271.

Sincerely,

JEFFREY S. HUNT, AICP
Planning Director

Attachments
xc: Clayton I. Yoshida, AICP, Planning Program Administrator
Aaron H. Shinmoto, PE, Planning Program Administrator (2)
James A. Buika, Staff Planner
Scott Sauers, Department of Public Works
Matthew Slepin, Chris Hart & Partners, Inc
Development Services Administration
Office of Planning
Dolan Eversole, University of Hawaii Sea Grant Program, University of Hawaii, Honolulu
Project File
General File

JSH:JAB:nt
K:\WP_DOCS\PLANNING\SM3\2010\0001_KahanaSunsetBldgA\VerbalApproval02.02.10.doc

Attachment I: Wave action undermining Building "A" lanai foundation. See next photo.

Attachment II

Letter dated December 20, 2009, from Dr. Kiumars Siah of AAA Structural Engineering to the County of Maui. Subject: Emergency Repair Permit; Description of Proposed Solution for Seawall at Building A Located at Kahana Sunset Property , 4909 Lower Honoapiilani Highway, Lahaina, Hi 96761

ALAN M. ARAKAWA
Mayor

WILLIAM R. SPENCE
Director

MICHELE CHOUTEAU McLEAN
Deputy Director

RECEIVED
MAY - 1 2012
CHRIS HART & PARTNERS, INC.
Landscape Architecture and Planning

CC: Raymond
09/143

COUNTY OF MAUI
DEPARTMENT OF PLANNING

April 26, 2012

Ms. Laura Valenzuela
General Manager, AOAO
Kahana Sunset
4909 Lower Honoapiilani Highway
Lahaina, Hawaii 96761

Dear Ms. Valenzuela:

SUBJECT: SPECIAL MANAGEMENT AREA (SMA) MINOR PERMIT APPROVAL TO COMPLETE CONTROLLED REMOVAL OF AN UNSTABLE SOIL OVERHANG ABOVE A GUNITED CLIFF FACE AND SEA WALL AT THE SHORELINE AT THE KAHANA SUNSET AOAO, LOCATED AT 4909 LOWER HONOAPIILANI ROAD, LAHAINA, MAUI, HAWAII; TMK: (2) 4-3-003:015 (SMX 2009/0385) (SM2 2012/0051) (SSA 2012/0029) (EAE 2012/0040)

On October 23, 2009, the Department of Planning (Department) received your SMA Assessment application. The subject application has been held in abeyance by the Department in order to resolve identified encroachments by Kahana Sunset AOAO into the shoreline area and onto State Conservation District lands.

The Department understands that the property is a shoreline property with a substantial beach profile as well as a rocky bluff transitioning into an unstable bluff to the north that has been stabilized by a coating of gunite material. The subject project is limited in scope which is to remove the overhanging unstable soil totaling less than 100 cubic yards. Engineering plans with Best Management Practices (BMPs) have been submitted as part of the subject project in order to protect the marine environment. Beach processes will not be impacted by this project.

On December 23, 2009, the Department granted to the Kahana Sunset AOAO a SMA Emergency Permit to complete temporary emergency protective measures and repairs to Building "F" and adjacent seawall, pursuant to the *Special Management Area Rules for the Maui Planning Commission*, Section 12-202-16, Special Management Area Emergency Permit Procedures. (SM3 2009/0005)

On February 4, 2010, the Department granted to the Kahana Sunset AOAO a second SMA Emergency Permit to complete temporary emergency protective measures and repairs to Building "A" and adjacent seawall, pursuant to the *Special Management Area Rules for the Maui Planning Commission*, Section 12-202-16, Special Management Area Emergency Permit Procedures. (SM3 2010/0001)

From these SMA Emergency Permits, the Department is very familiar with the parcel. Coastal Resources Planner James Buika has conducted multiple site visits to the parcel. As a result of these two (2) SMA Emergency Permits, Department site visits, and interaction with the State Department of Land and Natural Resources (DLNR), Kahana Sunset AOAO has been pursuing a master plan for the shoreline area and is working to complete a State Certified Shoreline by removing identified encroachments onto the State Conservation lands. The Master Plan for Kahana Sunset is required as part of finalizing SMA permits for the SMA emergency temporary protective measures granted in 2009 and 2010, above.

To date, the Department is satisfied with the progress made by Kahana Sunset AOAO in finalizing these outstanding permits and removal of encroachments and is willing to permit the slope stabilization project with BMPs, pursuant to a condition of continued progress towards finalizing the required SMA permits and the State Certified Shoreline Map.

In accordance with the *SMA Rules for the Maui Planning Commission* (SMA Rules), ~~Sections 12-202-12 and 12-202-14, and the Coastal Zone Management Act, HRS 205-A,~~ as amended, Section 22, Definitions, a determination has been made relative to the above-referenced project that:

1. The project is considered a "development" in the Special Management Area and is not an exempted action;

2. The project has a valuation not in excess of $500,000.00;
(Valuation: $80,000.00)

3. A State Certified Shoreline Map has not been submitted with the application but is hereby waived by the Director under 12-202-12 Assessment and determination procedures;

4. The proposed project has outstanding land use conflicts that are being resolved as part of the Kanaha Sunset AOAO master plan. The State Land Use Classification of Urban, West Maui Community Plan of Single-Family and a portion in Open Space, County Zoning R-3 Residential District, flood zone designation of portions in the *VE, AE, and X* zones and the project is located in the SMA;

5. The project complies with Chapter 19.62, Maui County Code (MCC), relating to flood hazard areas, and Chapter 20.08, MCC, relating to soil erosion and sedimentation control;

6. With proper BMPs in place, the project has no significant adverse environmental or ecological effect, taking into account potential cumulative effects; and

7. The project is consistent with the objectives, policies, and SMA guidelines set forth in the Hawaii Revised Statutes (HRS), Chapter 205-A, and is consistent with the Countywide Policy Plan and Zoning.

In consideration of the above determination, you are hereby granted a SMA Minor Permit Approval (SM2 2012/0051), subject to the following conditions:

1. That construction shall be in accordance with the description and plans submitted and stamped on October 23, 2009, prepared by AAA Structural Engineering are correct and representations made to the Department.

2. That construction of the improvements shall be initiated by **April 30, 2013**, and shall be completed within one (1) year of said initiation.

3. That Best Management Practices, as presented in the site plans, shall be implemented to insure water quality and marine resources are protected. No construction materials should be stockpiled in the aquatic environment. All construction-related materials should be free of pollutants and placed or stored in ways to avoid or minimize disturbance. No debris, petroleum products or deleterious materials or wastes should be allowed to fall, flow, leach, or otherwise enter near shore waters. Any turbidity and siltation generated from activities proposed at the site should be minimized and contained in the immediate vicinity of construction through the use of effective silt containment devices. Construction during adverse weather conditions should be curtailed to minimize the potential for adverse water quality impacts. Appropriate measures to minimize dirt and water runoff, noise, and dust must be used.

4. That the Applicant must check with the Department's Zoning Administration and Enforcement Division to determine if a Flood Hazard Development Permit is required.

5. That full compliance with all other applicable governmental requirements shall be rendered.

Furthermore, in accordance with the *Shoreline Rules for the Commission* (Shoreline Rules), Sections 12-203-4, 12-203-6, and 12-203-07 and the above mentioned submittals, the Department provides you with the following analysis and Shoreline Setback Determination:

1. The Applicant will be working in the Shoreline Setback Area;

2. The proposed activity is an allowable activity in the Shoreline Setback Area under 12-203-12(9); and

3. The proposed activity will not artificially fix the shoreline nor adversely affect beach processes.

In consideration of the above determination, you are hereby granted a Shoreline Setback Approval (SSA 2012/0029).

Further, the proposed project was reviewed in accordance with Chapter 343, HRS, relative to Environmental Impact Statements because the proposed project involves the *"Use of shoreline area."* Based on the scope of the proposed activity and the representations made by the Applicant, the Department has determined that the project qualifies as exempt from the preparation of an Environmental Assessment under the class of actions defines as, *Minor alterations in the conditions of land, water, and vegetation."*

Pursuant to the aforementioned, you are hereby granted an Environmental Assessment Exemption (EAE 2012/0040).

Thank you for your cooperation. If additional clarification is required, please contact Coastal Resources Planner James Buika at james.buika@mauicounty.gov or at (808) 270-6271.

Sincerely,

CLAYTON I. YOSHIDA, AICP
Planning Program Administrator

for WILLIAM SPENCE
Planning Director

xc: Aaron H. Shinmoto, PE, Planning Program Administrator (PDF)
James A. Buika, Staff Planner (PDF)
Development Services Administration
Chris Hart & Partners, Inc.
CZM File (SMX/SM2/SSA)
SMX folder
SSA File
EAE File
Project File
General File

WRS:CIY:JAB:sa
K:\WP_DOCS\PLANNING\SM2\2012\0051_KanahaSunsetAOAOSeawallRepair\Approval.doc

APPENDIX C
1968 Variance

Associate
JOHN T. VAIL

MEYER M. UEOKA
ATTORNEY AT LAW
WAILUKU, MAUI, HAWAII 96793

2121 MAIN STREET
Post Office Box 433
Phone: 33-761

February 6, 1968

Mr. Joseph Medeiros, Chairman
and Members of the Maui County
Planning Commission
Kahului, Maui, Hawaii

Re: Tax Keys 4-3-03-15 and 51 - Yabuis

Gentlemen:

Yoshiharu Yabui and Kiyoshi Yabui, owners of the above parcels of land, and Mike McCormack, of Inland Marine Development, Inc., have heretofore applied for rezoning of that certain property identified on the tax map of the Second Taxation Division as Tax Keys 4-3-03-15 and 51 from residential to H-1. Following the application a hearing thereon was held. Since our last appearance before the Planning Commission, considerable thought had gone into the matter, basing upon what is the best interest of all parties concerned, including that of the Yabuis.

We hereby now seek a variance of the said property so as to permit the owners and developers to construct an apartment based on the provisions of the proposed A-1 zoning which has not as yet been adopted.

Restrictions can be imposed as follows:

That the owners and developers would construct a two-story modified building with a 40 per cent density, plus club facilities, with one parking stall for every two units. Further, a sketch of the proposed structure shall be submitted for approval not later than February 20, 1968.

We therefore respectfully request for a variance in accordance with the terms and conditions hereinabove set forth. In the event our request is granted, we hereby forthwith withdraw our application for rezoning to H-1 zoning of the said property.

Very truly yours,

MEYER M. UEOKA

MMU:mas

February 20, 1968

Mr. Robert O. Ohata
Planning Director
County of Maui
Wailuku, Maui

Dear Sir:

This will acknowledge receipt of your letter dated Feb. 7, 1968 (C. C. #59) relative to the following subject matter:

Variance to Yabui to Construct Apartment
with Accessory Uses.

Kindly be advised that your communication was presented to the Board of Supervisors of the County of Maui at its meeting held on Feb. 16, 1968, and the same was referred to the Public Works Committee by the said Board.

Very truly yours,

G. N. TOSHI ENOMOTO
County Clerk

MARJORIE K. MARTINEZ
ADMINISTRATIVE ASSISTANT

LEINAALA M. COCKETT
SECRETARY

BOARD OF SUPERVISORS
COUNTY OF MAUI
WAILUKU, MAUI, HAWAII

March 1, 1968

Honorable Chairman & Members
of the Board of Supervisors
County of Maui

Gentlemen:

The Public Works Committee submits herewith its recommendations on the following matters; as specified: (See attachments)

PROPOSED FIRE PROTECTION:

1. DIRECT THE FIRE CHIEF & CTY ENGR - To proceed with a Feasibility and Cost Data Study to provide adequate fire protection for the Districts of Makawao; Kula; & Kihei. Detailed follow-up report shall be submitted by March 31st to the Public Works and Finance Committees, for consideration and further action. (Boy Scout Resolution attached hereto).

ACCEPT & FILE:

2. C.C. #59 Planning - Re: Notification of unanimous action taken by the Planning Commission, in approving a Variance requested by Kiyoshi Yabui et al; for Construction of an Apartment Building with Accessory Uses, at Mailepai, Lahaina.

3. C.C. #39 & #64 Engr - Re: Approval for Right-of-Entry at the Puunene Airport area; for the use of 2.3 acres by the County of Maui for Garbage Dumpsite purposes; under the terms and conditions stipulated by the State Land Dept.

FILE:

4. G.C. #53 H.F. Chapman - Submitting comments pertaining to a proposed Change in Zoning for the Yabui property in Lahaina; from Residential to H-1 Hotel District. The application for a Change in Zoning has been withdrawn.

5. C.C. #63 Fed. Coord. - Re: Extension of time approved by the Federal Government B.O.R. for the completion of Kepaniwai Gardens Increment "A"; from Feb. 29 to Dec. 31, 1968.

6. Resolution #15 - Re: Acquisition of funds for the Kaunakakai Sewerage System. (See Res. # 26 ; adopted this date).

Adoption of this report is respectfully requested.

Very truly yours,
PUBLIC WORKS COMMITTEE

LANNY MORISAKI, Vice-Chmn.

SOON OAK LEE, Chairman

BERNARD TOKUNAGA, Member

WILFRED TAVARES, Member

MARCO MEYER, Member

RICHARD CALDITO, Member

NKM
atts:

C.R. #49

OFFICE OF THE COUNTY CLERK
WAILUKU, MAUI, HAWAII 96793

INTER-DEPARTMENTAL MEMORANDUM

TO: Planning Director, County of Maui

DATE: March 6, 1968

SUBJECT: COMMITTEE REPORT NO. 49 ADOPTED BY THE MAUI COUNTY BOARD OF SUPERVISORS ON Mar. 1, 1968

In behalf of the Board of Supervisors, we hereby inform you of the adoption of the following committee report and request your attention, as may be required, to such matter(s) contained therein which is (are) of concern to your Office.

COUNTY CLERK

Item No. 2 - ACCEPT & FILE: Notification of unanimous action taken by the Planning Commission, in approving a Variance requested by Kiyoshi Yabui et al; for Construction of an Apartment Building with Accessory Uses, at Mailepai, Lahaina.

APPENDIX D
Preliminary Structural Engineering Report

STRUCTURAL ENGINEERING
INSPECTION & EVALUATION SERVICES
ENGINEERING SERVICES YOU CAN TRUST!

PRELIMINARY STRUCTURAL ENGINEERING REPORT FOR IMPLEMENTATION OF PROPOSED SHORELINE PROTECTION MASTER PLAN AT KAHALA SUNSET CONDOMINIUM KAHANA, MAUI

Prepared for

Kahana Sunset AOAO

4909 L. Honoapiilani Hwy., Lahaina, HI 96761

May 2012

AAA STRUCTURAL ENGINEERING INSPECTION & EVALUATION SERVICES
999 Wilder Avenue • Suite 804 • Honolulu, HI 96822 • Phone: (808) 744-8817 • Email: inquiries@aaastructuralengineering.com

TABLE OF CONTENTS

PRELIMINARY STRUCTURAL ENGINEERING REPORT
FOR
KAHANA SUNSET CONDOMINIUM

TABLE OF CONTENTS

SECTION	TITLE	PAGE
1.0	**PROJECT DESCRIPTION**	
1.1	Project Background	2
1.2	Proposed Plan	2
1.3	Nature of Preliminary Structural Engineering	3
2.0	**STRUCTURAL DRAWINGS**	
2.1	List of Drawings	5
	Title Sheet Drawing	6
	Existing Condition and Limits of Restoration Drawing	7
	General Layout Plan Drawing	8
	General Notes and Details Drawing	9
	Wall and Stairs Details Drawing	10
3.0	**CONSTRUCTION COST OPINION**	
3.1	Construction Cost Opinion	11
3.2	Limitations of Construction Cost Opinion	11
3.3	Contingency Construction Budget	11

SECTION ONE

PROJECT DESCRIPTION

SECTION ONE

PROJECT DESCRIPTION

1.1 Description of Existing Conditions

The Kahana Sunset Condominium is a shorefront multi-unit resort complex located at Keonenui Bay between Alaeloa Point and Haukoe Point along west coast of Maui. The geographic location of the Kahana Sunset property is shown on Figure 1-1. As a shorefront property, the project site is exposed to north swells and trade wind waves resulting in chronic beach erosion. The combined adverse impacts of the environmental factors include occasional damage to shoreline protective structures and their foundations. In the past decade, severe structural damages to the existing seawalls fronting the property have resulted in two emergency conditions threatening the safety of the two shorefront buildings A and F. In 2003, the severely undermined seawall fronting building A was repaired under the emergency permit SM3 20003/0001. Six years later, in 2009, the sudden collapse of the walkway behind the seawall fronting building F, which revealed an approximately 5-foot deep cavity behind the main seawall from the south end of the wall at the property line to the serpentine seawall makai of the main seawall along the length of building F, presented life safety concerns for the occupants of building F calling for immediate evacuation of all units in the building which lasted several months. The emergency repairs to secure the affected undermined seawall were completed under the emergency permit SM3 2009/0005. In 2010, Kahana sunset removed the undermined serpentine seawall which protected the main seawall in front of building F. In 2011, severe erosion led to undermining of the seawall fronting the BBQ pavilion and shower area extending to the beach access stairs. Currently, this area of the seawall is structurally unstable and constitutes a safety hazard. The combined effect of removing the old serpentine wall and the failure of the seawall fronting the BBQ pavilion has created an unprotected shorefront zone between two buildings A and F.

1.2 Proposed Plan

To address the failure of the retaining wall fronting the BBQ pavilion and shower area as well the loss of protection previously provided by the old serpentine wall at the unprotected shorefront zone in accordance with the development plan for shore protection, the Kahana Sunset AOAO is currently in the process of applying for a shoreline setback variance. Also, pursuant to the County of Maui Department of Public Works request, the Kahana Sunset AOAO is preparing a shoreline protection Master Plan and an Environmental Assessment for the proposed shoreline modifications. The Implementation of the proposed shoreline

protection Master Plan requires removal of the failed seawall fronting the BBQ pavilion and existing stairs as well as the remnants of the old serpentine wall. As shown on Drawing Sheets S-1 and S-2, the Master Plan proposes to enlarge the beach area by constructing the replacement seawall further back from the current position of the failed wall and extending the existing seawall fronting building F in lieu of reconstruction of the old serpentine wall. Also, the new beach access stairs will be constructed further back from the location of existing beach access stairs.

1.3 Nature of Preliminary Structural Engineering Report

In February 2012, Kahana Sunset AOAO contracted AAA Structural Engineering Inspection & Evaluation Services to prepare a preliminary structural engineering report for implementation of the referenced shoreline protection Master Plan. This report is submitted for the said purpose and will be included as an integral part of the Master Plan.

The report presents structural design drawings for the proposed shoreline modifications at Kahana sunset property. These drawings are the result of engineering assessment of the existing conditions, development of a conceptual structural system for the proposed shoreline modifications, and structural design of the conceptual structural system. The report concludes with a construction cost opinion based on the proposed structural system shown on the conceptual drawings included herein.

Figure 1.1 Project Site Location & Vicinity Maps

Kahana Sunset Property

Project Site Vicinity Map

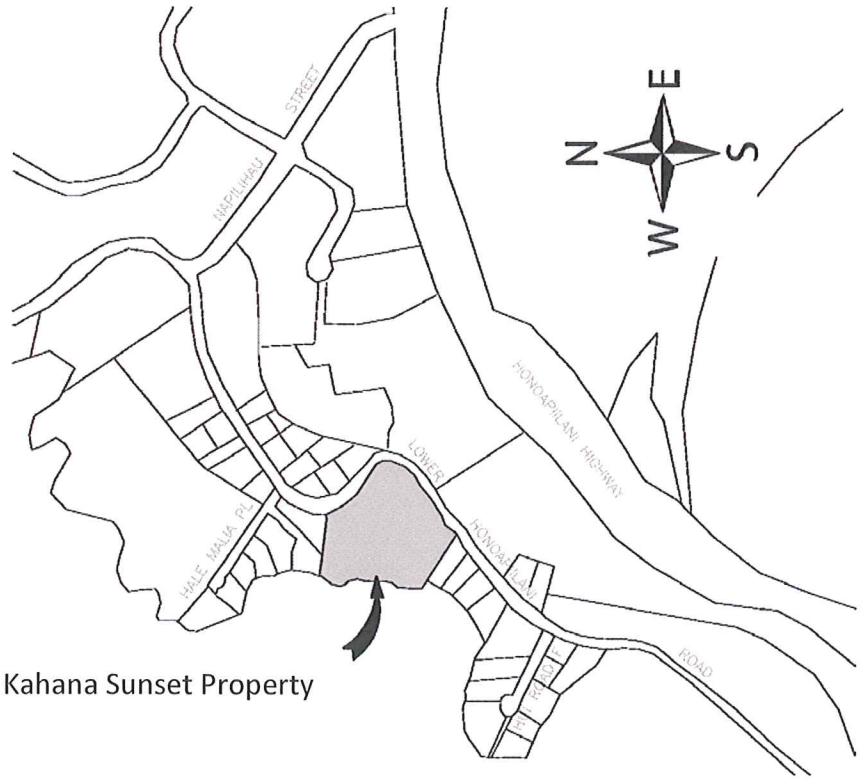

Kahana Sunset Property

Project Site Location Map

SECTION TWO

STRUCTRAL DRAWINGS

SECTION TWO

STRUCTURAL DRAWINGS

2.1 List of Structural Drawings

In this section the following structural drawings for the implementation of the proposed shoreline protection Master Plan are included:

1. Title Sheet
2. Existing Condition and Limits of Restoration
3. General Layout Plan
4. General Notes and Details
5. Wall and Stairs Details

KAHANA SUNSET AOAO
SEAWALL RESTORATION

4909 L. HONOAPIILANI RD.
LAHAINA, MAUI 96761

TMK: 2-4-3-00-30-15:0000 THRU 0079

PREPARED BY:

AAA STRUCTURAL ENGINEERING
INSPECTION & EVALUATION SERVICES
999 WILDER AVENUE, SUITE 804
HONOLULU, HAWAII 96822
PHONE: 808-398-6749
EMAIL: INQUIRIES@AAASTRUCTURALENGINEERING.COM

SITE PLAN (NOT TO SCALE)

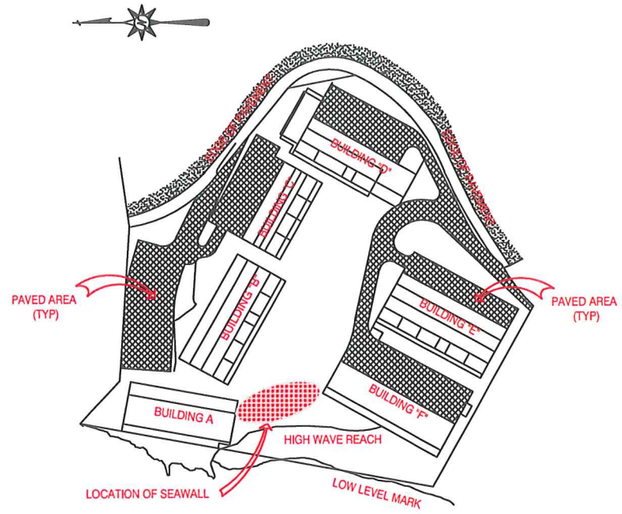

ENERGY CODE CERTIFICATION

COUNTY OF MAUI
MAUI COUNTY CODE, CHAPTER 16.16A ENERGY COD E

To the best of my knowledge, this project's design conforms to the Energy Code for:

_____ Building Component Systems
_____ Electrical Component Systems
_____ Mechanical Component sytems

Signature: _____ Date: _____

Name: _____

Title: _____

License Number: _____

VICINITY MAP (NOT TO SCALE)

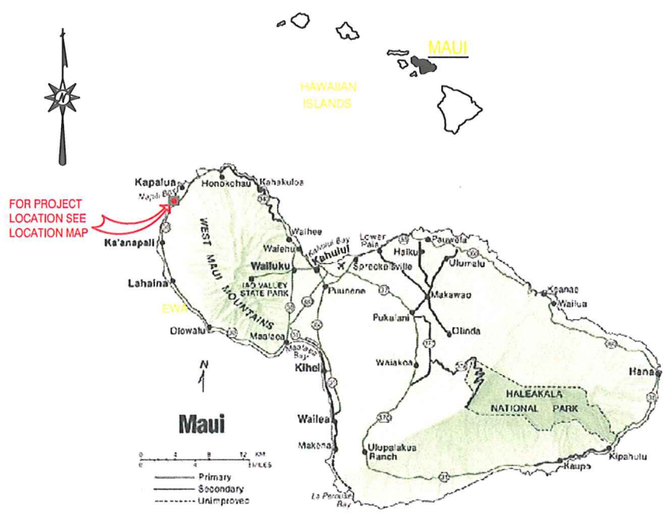

LOCATION MAP (NOT TO SCALE)

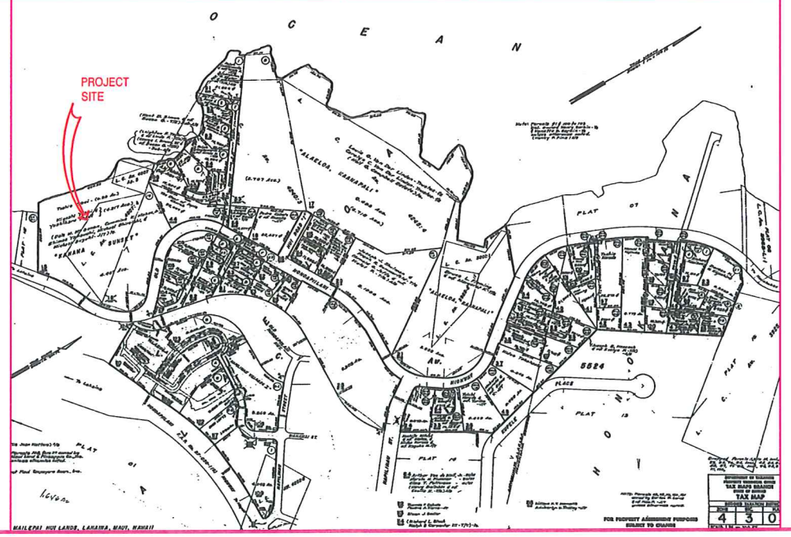

APPROVED

_____ _____
COUNTY OF MAUI DATE
DEPARTMENT OF PLANNING

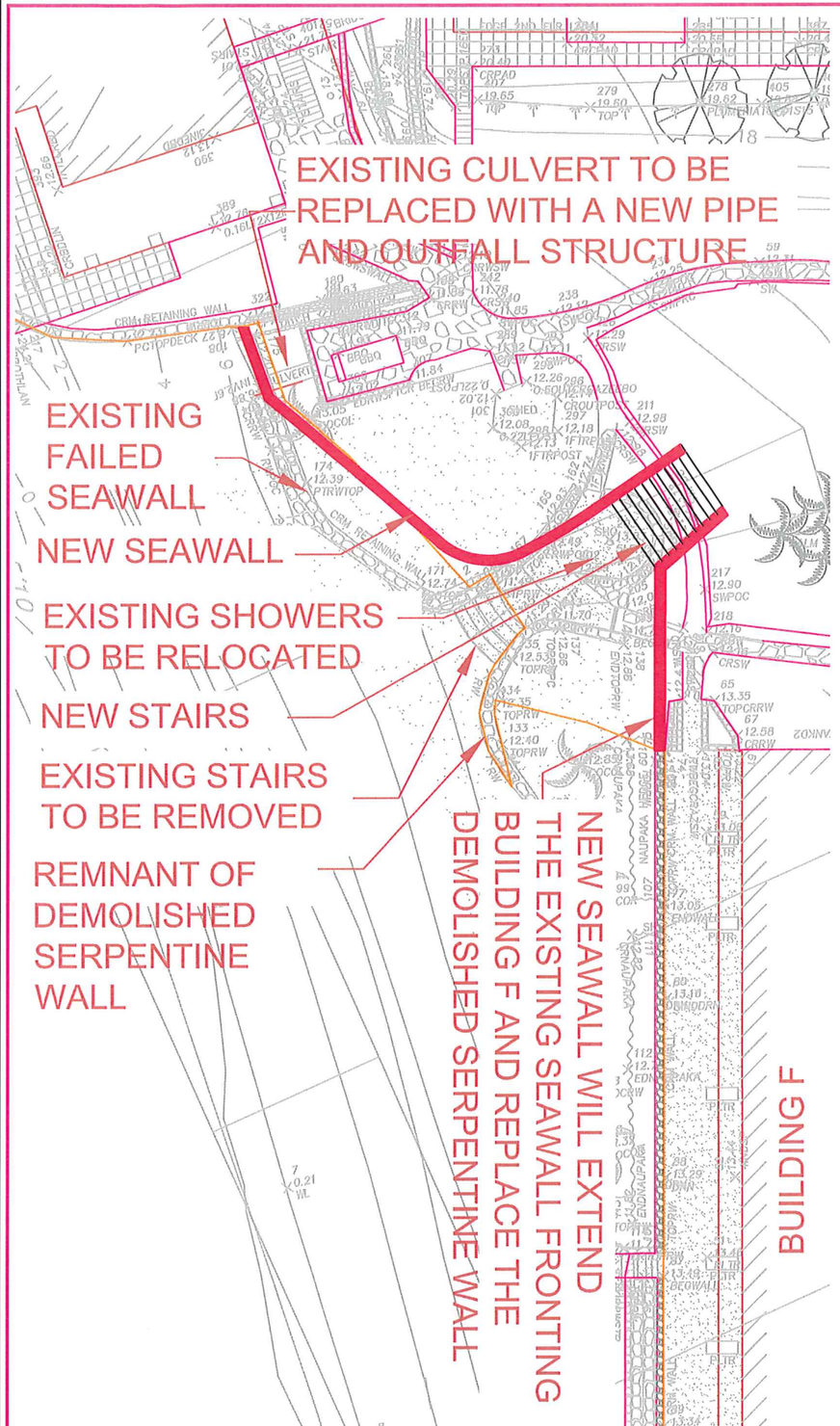

LOCATION AND LIMITS OF RESTORATION PROJECT

SEE SHEET S-2 FOR DIMENSIONS AND LAYOUT OF WALLS AND STAIRS

STRUCTURALLY UNSAFE CONDITION OF THE EXISTING FAILED SEAWALL

Prepared by:

STRUCTURAL ENGINEERING INSPECTION & EVALUATION SERVICES
ENGINEERING SERVICES YOU CAN TRUST

Address:
999 Wilder Avenue, Suite 804
Honolulu, Hawaii 96822

Phone:
808-744-8817

Email:
info@aaastructuralengineering.com

KIUMARS SIAH
LICENSED PROFESSIONAL ENGINEER
No. 9446-S
HAWAII, U.S.A.

THIS WORK WAS PREPARED BY ME OR UNDER MY SUPERVISION. CONSTRUCTION OF THIS PROJECT WILL BE UNDER MY SUPERVISION.
MY LICENSE EXPIRES ON APRIL 30, 2014

Signature

KAHANA SUNSET AOAO

SEAWALL RESTORATION & DEVELOPMENT

EXISTING CONDITION AND LIMITS OF RESTORATION

No.	Revision/Issue	Date

Project:	2012-KS-1
Scale:	As Shown
Date:	May 2012
Drawn by:	JAS
Designed by:	KS
Checked by:	KS
Drawing No.:	

S-1

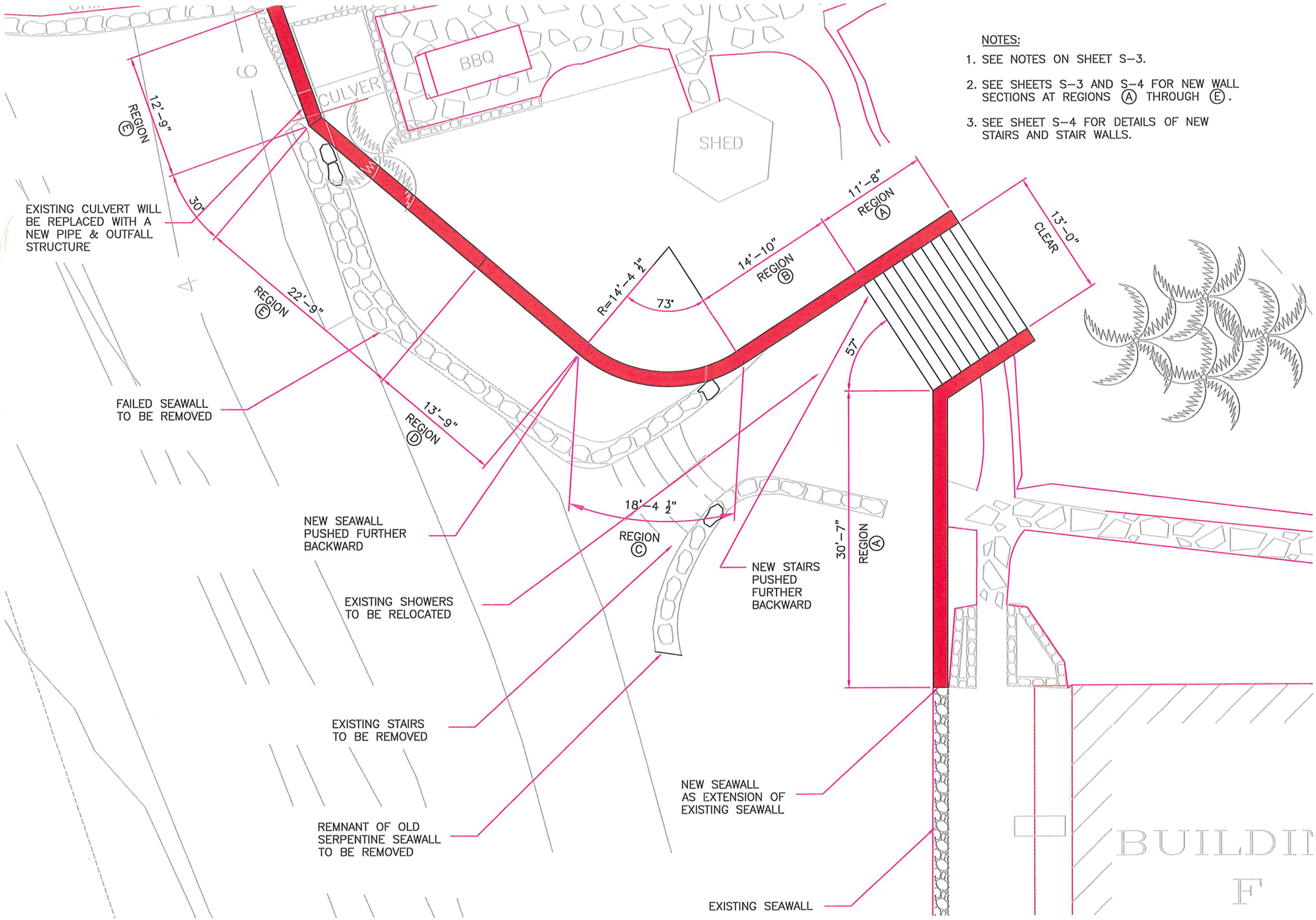

NEW WALL AND STAIRS LAYOUT PLAN
SCALE: 1" = 10'-0"

Prepared by:
STRUCTURAL ENGINEERING INSPECTION & EVALUATION SERVICES
ENGINEERING SERVICES YOU CAN TRUST!
Address:
999 Wilder Avenue, Suite 804
Honolulu, Hawaii 96822
Phone:
808-744-8817
Email:
info@aaastructuralengineering.com

KIUMARS SIAH
LICENSED PROFESSIONAL ENGINEER
No. 9446-S
HAWAII, U.S.A.

THIS WORK WAS PREPARED BY ME OR UNDER MY SUPERVISION. CONSTRUCTION OF THIS PROJECT WILL BE UNDER MY SUPERVISION.
MY LICENSE EXPIRES ON APRIL 30, 2014

Signature

KAHANA SUNSET AOAO

SEAWALL RESTORATION & DEVELOPMENT

GENERAL LAYOUT PLAN

No.	Revision/Issue	Date

Project:	2012-KS-1
Scale:	As Shown
Date:	May 2012
Drawn by:	JAS
Designed by:	KS
Checked by:	KS
Drawing No.:	

S-2

NOTES

1. GENERAL NOTES:

CONTRACTOR SHALL REVIEW THE PROJECT DRAWINGS THOROUGHLY, DEVISE A SAFE AND CAREFUL PLAN FOR THE PROJECT, AND DIRECT ALL QUESTIONS AND CLARIFICATION TO THE ENGINEER BEFORE BIDDING.

CONTRACTOR SHALL OBSERVE ALL SAFETY REQUIREMENTS AND FEDERAL, STATE, MAUI COUNTY, AND OSHA REGULATIONS THAT ARE APPLICABLE TO ALL PHASES OF THE PROJECT.

CONTRACTOR SHALL FAMILIARIZE HIS ENTIRE CREW AND OBSERVE ALL OSHA REQUIREMENTS APPLICABLE TO THE PROJECT.

CONTRACTOR SHALL ADVISE ALL THE PERSONNEL INVOLVED IN THE PROJECT OF ALL SAFETY AND SECURITY REQUIREMENTS FOR THE PROJECT AS WELL AS THE BEST MANAGEMENT PRACTICES FOR THE RELATED WORK.

THE CONTRACTOR SHALL IMPLEMENT ALL SAFETY MEASURES TO SAFEGUARD THE WORKERS AND SHALL BE RESPONSIBLE FOR SAFE EXECUTION OF THE WORK AS WELL AS SAFEGUARD OF THE EXISTING SEAWALL OR BUILDING.

THE CONSTRUCTION WORK AREA SHALL BE CLOSED TO NON-WORKERS AT ALL TIMES. CONTRACTOR SHALL COORDINATE WITH THE OWNER AND PLACE NECESSARY WARNING SIGNS TO ALERT THE PUBLIC OF POSSIBLE DANGER.

THE OWNER SHALL CONTACT THE MAUI DEPARTMENT OF PLANNING TO VERIFY THE PERMITTING REQUIREMENTS FOR THE PROJECT.

NOTHING SHALL BE DISCHARGED IN THE OCEAN. NO WORK IS ALLOWED ON THE SHORELINE.

CONTRACTOR SHALL BE RESPONSIBLE TO FIELD VERIFY ALL EXISTING CONDITIOND AND DIMENSIONS AND USE THE ACTUAL DIMENSIONS FOR CONSTRUCTION PURPOSES.

CONTRACT INCLUDES REMOVING AND RELOCATING ALL LOOSE OR REMOVED/EXCAVATED SOIL TO AUTHORIZED DUMPING LOCATIONS. ADDITIONALLY, CONTRACTOR SHALL REMOVE ALL CONSTRUCTION RELATED DEBRIS/MATERIALS FROM AND CLEAN THE WORK AREA UPON COMPLETION OF CONSTRUCTION ACTIVITIES.

TIME IS OF ESSENCE. CONSTRUCTION ACTIVITIES SHALL BE SO PLANNED TO MINIMIZE THE CONSTRUCTION TIME.

CONTRACTOR SHALL REVIEW THE DRAWINGS AND SUBMIT ALL QUESTIONS OR REQUESTS FOR CLARIFICATION TO ENGINEER PRIOR TO BIDDING. THE BID SHALL BE ALL-INCLUSIVE WITH A LUMP SUM TOTAL PRICE WHICH INCLUDES APPLICABLE TAXES. THE TOTAL BID PRICE SHALL BE FOR THE COMPLETE WORK AS SHOWN ON THE DRAWINGS.

DUE TO THE NATURE OF THE PROJECT, CONTRACTOR SHALL BE PREPARED TO ADJUST HIS METHODS IN FIELD AND AS DIRECTED BY THE ENGINEER TO ADDRESS SPECIFIC SITE CONDITIONS.

CONTRACTOR SHALL BE RESPONSIBLE FOR SELECTING HIS OWN MEANS AND METHOD TO ACCOMPLISH THE WORKS INCLUDED IN THE CONTRACT.

2. CONTRACTOR'S QUALIFICATIONS::

CONTRACTOR SHALL SUBMIT DOCUMENTATION THAT HE HAS SUCCESSFULLY COMPLETED AT LEAST 3 SIMILAR PROJECTS WITHIN THE LAST 3 YEARS.

3. MATERIAL PROPERTIES:

STEEL REINFORCEMENT: ASTM A 615, GRADE 60, DEFORMED
PORTLAND CEMENT: ASTM C 150, TYPE II
FLY ASH ADMIXTURE: ASTM C 618, CLASS C OR F
NORMAL WEIGHT AGGREGATE: ASTM C 33, UNIFORMLY GRADED AGGREGATE
WATER; POTABLE, COMPLYING WITH ASTM C 94 REQUIREMENTS
ADMIXTURES: CERTIFIED BY MANUFACTURER TO CONTAIN NOT MORE THAN 0.1 PERCENT WATER SOLUBLE CHLORIDE IONS BY MASS OF CEMENTITIOUS MATERIAL AND TO BE COMPATIBLE WITH OTHER ADMIXTURES AND CEMENTITUOUS MATERIALS
DO NOT USE ADMIXTURES CONTAINING CALCIUM CHLORIDE
WATER-REDUCING ADMIXTURE: ASTM C 494, TYPE A
HIGH-RANGE, WATER-REDUCING ADMIXTURE: ASTM C 494, TYPE G

4. TECHNICAL NOTES:

CONCRETE COMPRESSIVE STRENGTH (28 DAYS): 5,000 PSI

SHOTCRETE COMPRESSIVE STRENGTH (28 DAYS): 5,000 PSI

LIMIT WATER SOLUBLE, CHLORIDE-ION CONTENT IN HARDENED CONCRETE TO 0.15 PERCENT BY WEIGHT OF CEMENT. MEASURE, BATCH, MIX, AND DELIVER CONCRETE ACCORDING TO ASTM C 94 AND FURNISH BATCH TICKET INFORMATION. DO NOT ADD WATER TO CONCRETE MIX AFTER MIXING UNLESS APPROVED BY THE ENGINEER. MAINTAIN CONCRETE TEMPERATURE LESS THAN 90 DEGREES FAHRENHEIT.

TYPICALLY PROVIDE A MINIMUM OF 3-INCH CONCRETE COVER FOR REINFORCING STEEL.

WALL CAP SHALL MATCH THAT OF EXISTING SEAWALL FRONTING BUILDING F.

5. INSPECTION REQUIREMENT:

ALL CONSTRUCTION ACTIVITIES SHALL TAKE PLACE IN A CONTROLLED MANNER AND IN PRESENCE OF THE ENGINEER TO ALLOW NECESSARY ADJUSTMENT BASED ON FIELD CONDITIONS.

CONTRACTOR SHALL GIVE THE ENGINEER A 48-HOUR ADVANCE NOTICE REGARDING THE START DATE OF EACH PHASE OF THE PROJECT.

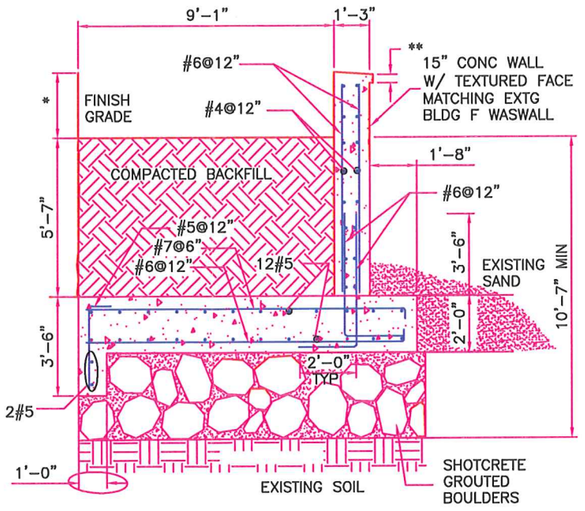

NOTES:
1. SEE GENERAL NOTES FOR PROJECT REQUIREMENTS.
2. * TOP OF WALL TO MATCH EXTG TOP OF SEAWALL FRONTING BLDG F
3. ** MATCH EXTG SEAWALL CAP DIMENSIONS

1 / S-3 WALL SECTION @ REGION A

SCALE: 3/8" = 1'-0"

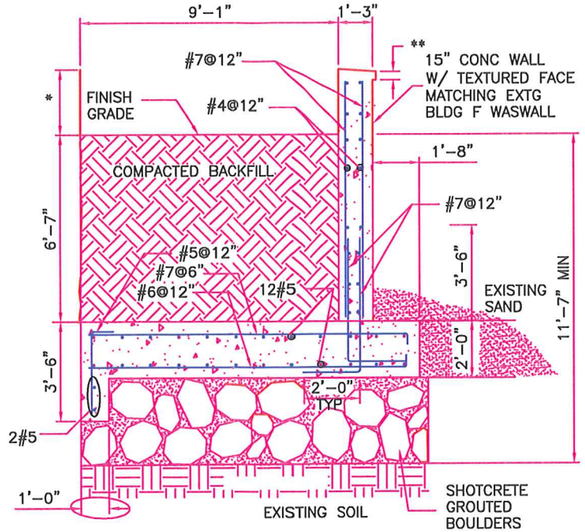

NOTES:
1. SEE GENERAL NOTES FOR PROJECT REQUIREMENTS.
2. * TOP OF WALL TO MATCH EXTG TOP OF SEAWALL FRONTING BLDG F
3. ** MATCH EXTG SEAWALL CAP DIMENSIONS

2 / S-3 WALL SECTION @ REGION B

SCALE: 3/8" = 1'-0"

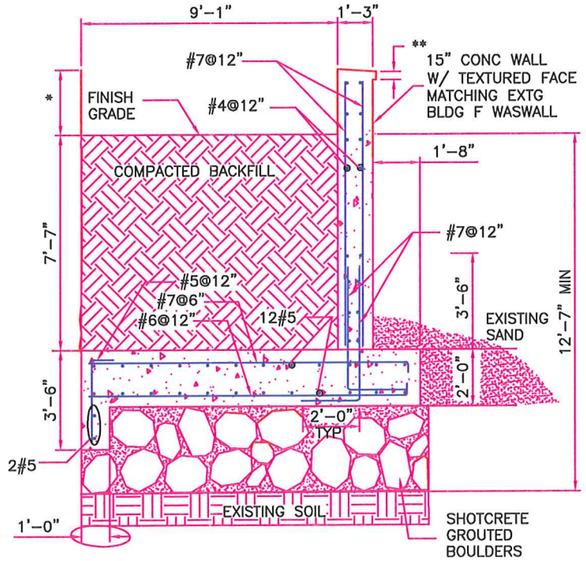

NOTES:
1. SEE GENERAL NOTES FOR PROJECT REQUIREMENTS.
2. * TOP OF WALL TO MATCH EXTG TOP OF SEAWALL FRONTING BLDG F
3. ** MATCH EXTG SEAWALL CAP DIMENSIONS

3 / S-3 WALL SECTION @ REGION C

SCALE: 3/8" = 1'-0"

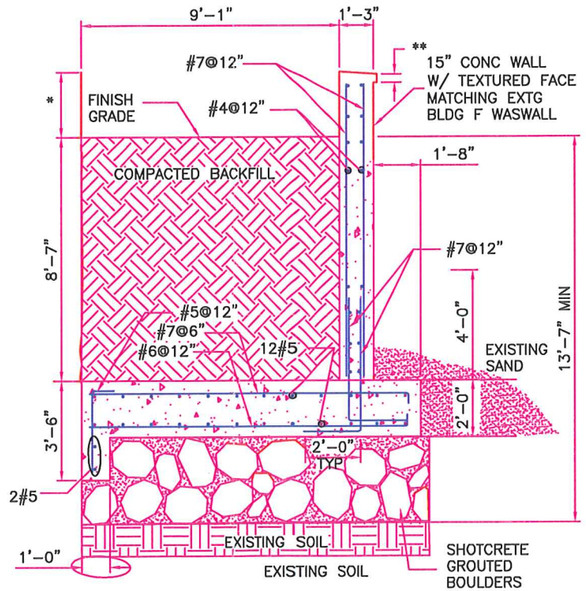

NOTES:
1. SEE GENERAL NOTES FOR PROJECT REQUIREMENTS.
2. * TOP OF WALL TO MATCH EXTG TOP OF SEAWALL FRONTING BLDG F
3. ** MATCH EXTG SEAWALL CAP DIMENSIONS

4 / S-3 WALL SECTION @ REGION D

SCALE: 3/8" = 1'-0"

Prepared by:

STRUCTURAL ENGINEERING
INSPECTION & EVALUATION SERVICES
ENGINEERING SERVICES YOU CAN TRUST

Address:
999 Wilder Avenue, Suite 804
Honolulu, Hawaii 96822

Phone:
808-744-8817

Email:
info@aaastructuralengineering.com

KUMARS SIAH
LICENSED PROFESSIONAL ENGINEER
No. 9446-S
HAWAII, U.S.A.

THIS WORK WAS PREPARED BY ME OR UNDER MY SUPERVISION. CONSTRUCTION OF THIS PROJECT WILL BE UNDER MY SUPERVISION.
MY LICENSE EXPIRES ON APRIL 30, 2014

Signature

KAHANA SUNSET AOAO

SEAWALL RESTORATION & DEVELOPMENT

GENERAL NOTES AND DETAILS

No.	Revision/Issue	Date

Project:	2012-KS-1
Scale:	As Shown
Date:	May 2012
Drawn by:	JAS
Designed by:	KS
Checked by:	KS
Drawing No.:	S-3

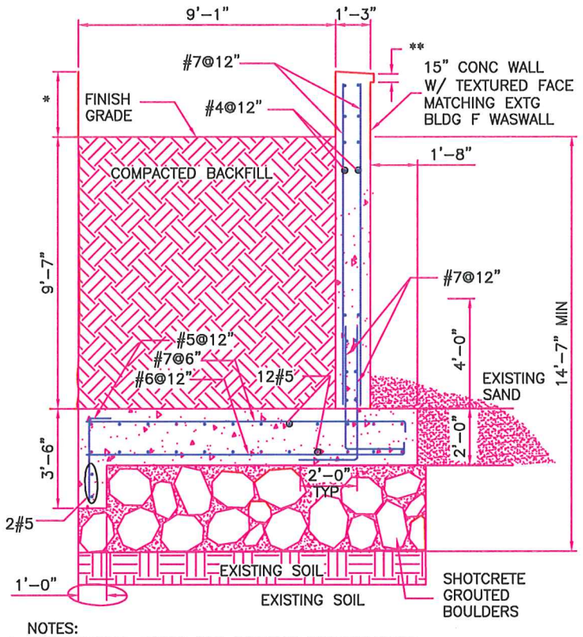

NOTES:
1. SEE GENERAL NOTES FOR PROJECT REQUIREMENTS.
2. * TOP OF WALL TO MATCH EXTG TOP OF SEAWALL FRONTING BLDG F
3. ** MATCH EXTG SEAWALL CAP DIMENSIONS

1 / S-4 WALL SECTION @ REGION E

SCALE: 3/16" = 1'-0"

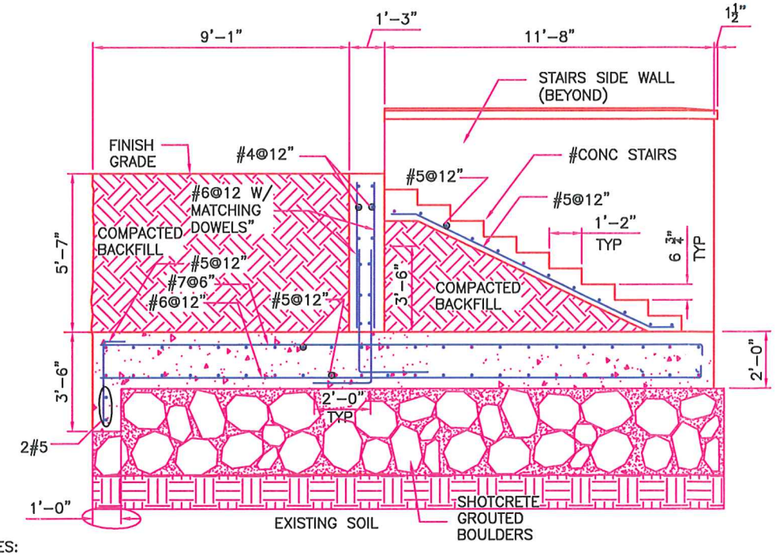

NOTES:

SEE GENERAL NOTES ON THE DRAWINGS AS WELL AS BID DOCUMENT FOR PROJECT REQUIREMENTS AND CONDITIONS.

THE ABOVE DETAIL SHOWS THE INTENT OF THIS PROJECT TO EXCAVATE THE GROUND AT STAIRS TO THE SAME DEPTH AS BEHIND THE SEAWALL, BACKFILL WITH GROUTED BOULDERS, AND BUILD THE STAIRS AS SHOWN.

SOME FIELD ADJUSTMENTS TO THE ABOVE DETAIL SHALL BE EXPECTED TO REALIZE THE ABOVE CONCEPT. NO CHANGE ORDER SHALL BE ACCEPTED FOR THE FIELD CHANGE.

SEE SHEET S-3 FOR APPLICABLE INFORMATION NOT REPEATED HERE..

A / S-4 WALL AND STAIRS DETAIL

SCALE: 3/16" = 1'-0"

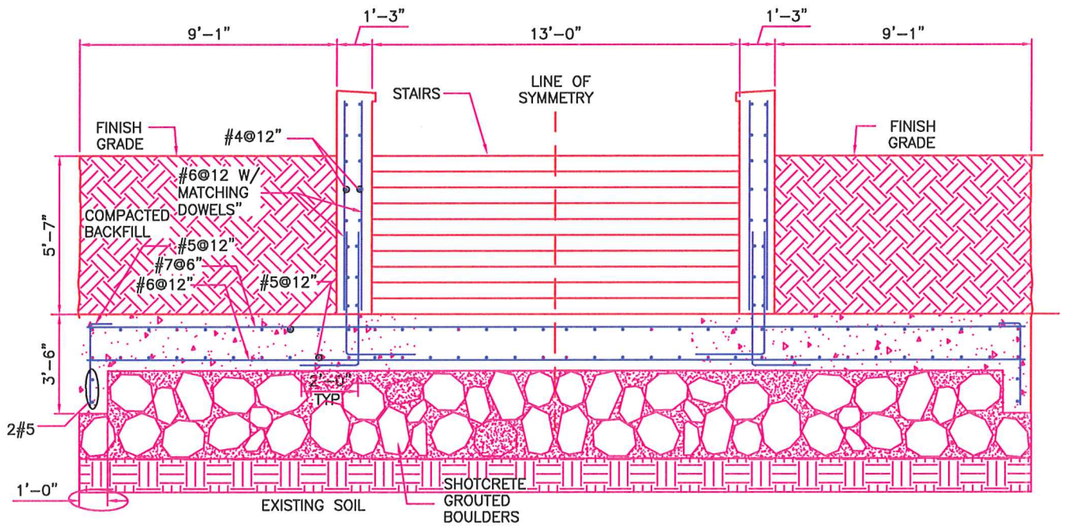

SEE NOTES SHOWN ON DETAIL A/S-4.

B / S-4 WALL AND STAIRS DETAIL

SCALE: 3/16" = 1'-0"

Prepared by:

STRUCTURAL ENGINEERING
INSPECTION & EVALUATION SERVICES
ENGINEERING SERVICES YOU CAN TRUST

Address:
999 Wilder Avenue, Suite 804
Honolulu, Hawaii 96822

Phone:
808-744-8817

Email:
Info@aaastructuralengineering.com

KIUMARS SIAH
LICENSED PROFESSIONAL ENGINEER
No. 9446-S
HAWAII, U.S.A.

THIS WORK WAS PREPARED BY ME OR UNDER MY SUPERVISION. CONSTRUCTION OF THIS PROJECT WILL BE UNDER MY SUPERVISION.
MY LICENSE EXPIRES ON APRIL 30, 2014

Signature

KAHANA SUNSET AOAO

SEAWALL RESTORATION & DEVELOPMENT

WALL AND STIARS DETAILS

No.	Revision/Issue	Date

Project:	2012-KS-1
Scale:	As Shown
Date:	May 2012
Drawn by:	JAS
Designed by:	KS
Checked by:	KS
Drawing No.:	

S-4

SECTION THREE

CONSTRUCTION COST OPINION

SECTION THREE

CONSTRUCTION COST OPINION

3.1 Construction Cost Opinion

Based on the structural drawings for the proposed shoreline modification project as presented in Section Two of this report, the cost of the proposed structural modifications is estimated to be Six Hundred Thousand Dollars ($600,000.00).

3.2 Limitations of Construction Cost Opinion

The referenced estimated cost is limited to the cost items associated with the work indicated on the structural drawings included in this report. These items include all labor, material, and execution costs related to demolition, excavation, concrete work, backfill and compaction by the contractor for installation of approximately 150 linear feet of wall and a set of stairs. Additional cost items related to the site improvement, drainage, landscaping, and other ancillary work required to complete the project shall be included in the overall project budget. Furthermore, the above estimated construction cost does not include cost of engineering design, special inspection, or required permitting fees.

Whereas reasonable attempts were made to estimate the probable construction cost for the project, it should be noted that we cannot and do not guarantee or warranty that the above estimated cost opinion will match the actual construction cost as submitted by bidding contractors.

3.3 Contingency Construction Budget

Considering the preliminary nature of the project, for budgeting purposes it is recommended that an additional contingency construction budget of approximately 15% to 20% be allocated for the project.

STRUCTURAL ENGINEERING
INSPECTION & EVALUATION SERVICES
ENGINEERING SERVICES YOU CAN TRUST!

Report Title: **Preliminary Structural Engineering Report for Implementation of Proposed Shoreline Protection Master Plan at Kahala Sunset Condominium, Kahana, Maui**

Date: **May 2012**

This report was prepared by me or
under my supervision.
My license expires on April 30, 2014.

AAA STRUCTURAL ENGINEERING INSPECTION & EVALUATION SERVICES
999 Wilder Avenue • Suite 804 • Honolulu, HI 96822 • Phone: (808) 744-8817 • Email: inquiries@aaastructuralengineering.com

APPENDIX E
Shoreline Survey Map

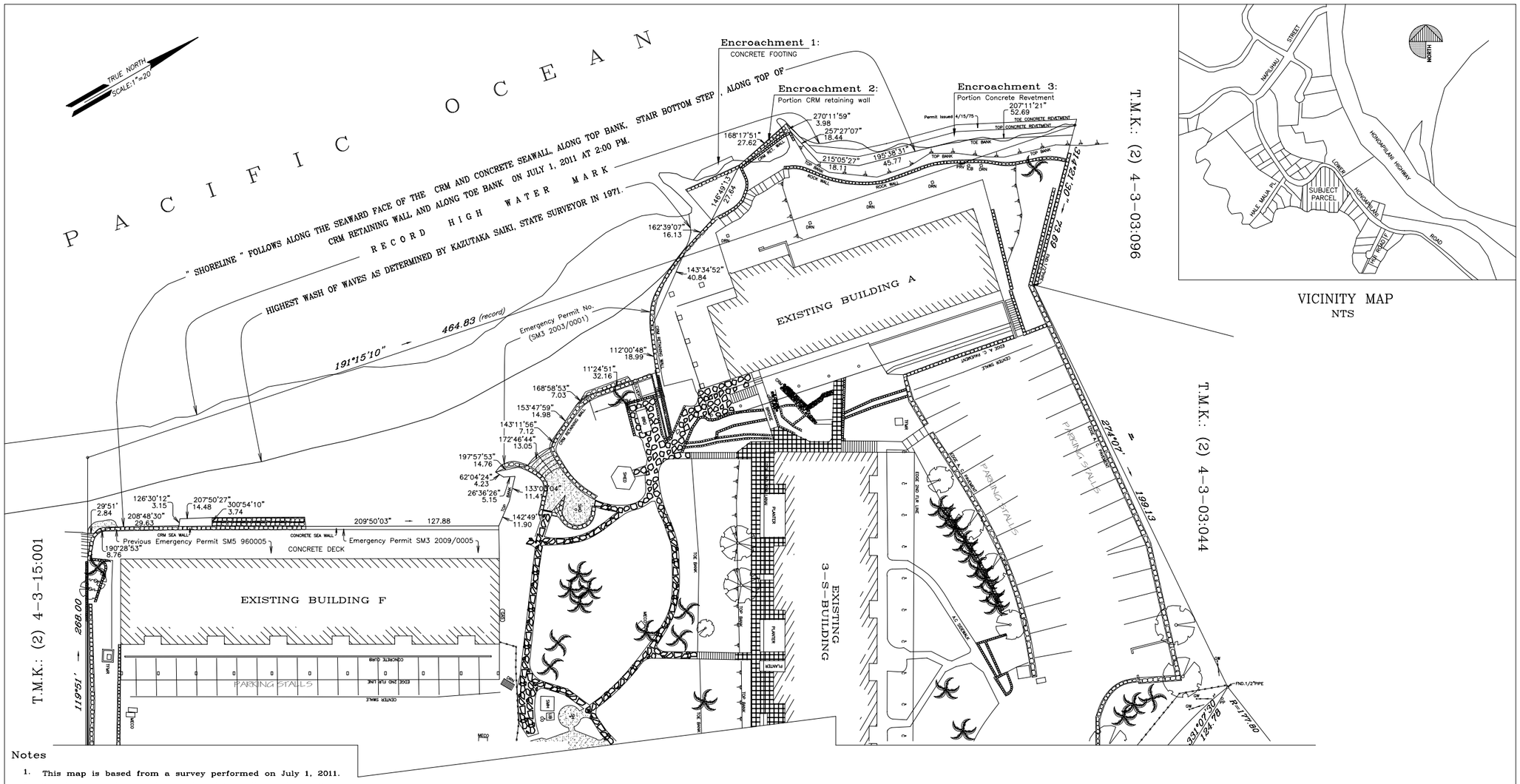

VICINITY MAP
NTS

Notes

1. This map is based from a survey performed on July 1, 2011.
2. Coordinates and azimuths are based from Triangulation Station "MALO" and its meridian was established from found boundary corner monuments of this lot and adjoining lots.
3. Elevation shown hereon is based from RM 16 of FEMA FIRM Panel No. 150003-0151C, revised 9-17-97.
4. Topographic information shown hereon are for general reference only.

Legend:

1. WM = WATER METER
2. WV = WATER VALVE
3. ICV = IRRIGATION CONTROL VALVE
4. SMH = SEWER MANHOLE
5. SDMH = STORM DRAIN MANHOLE
6. LP = LIGHT POST
7. FH = FIRE HYDRANT
8. TFMR = TRANSFORMER
9. PP = POWER POLE
10. MH = MANHOLE
11. DRN =DRAIN
12. IB IRRIGATION BOX
13. UB = UTILITY BOX
14. GW = GUY WIRE

= PLUMERIA
= SIDEWALK
= CRM WALL
= CONCRETE PAVEMENT
= TREE
= PALM
= COCONUT

Owner:
The Kahana Sunset
4909 Lower Honoapiilani Road
Lahaina, HI 96761
808-669-8011

Property Address:
4909 Lower Honoapiilani Road
Lahaina, HI 96761
808-669-8011

Prepared by:
VALENCIA LAND SURVEYING
P.O. Box 846
Lahaina, Maui, Hawaii, 96767
808-661-3257

This work was prepared by me or under my direct supervision.
VALENCIA LAND SURVEYING

ARTHUR P. VALENCIA
LICENSED PROFESSIONAL LAND SURVEYOR
No. 10026
HAWAII, U.S.A.

ARTHUR P. VALENCIA
Licensed Professional Land Surveyor
State of Hawaii Certificate No. 10026
Exp. Date: 4-30-12

Shoreline Verification

(For Construction Purposes)

"THE KAHANA SUNSET"

T.M.K.: (2) 4-3-03:015

BEING ALL OF R. P. 4697, L. C. AW. 4807:03 TO NIKA 2,
ALL OF R. P. 4697, L. C. AW. 4807:04 TO NIKA 2
AND A PORTION OF R. P. 1663, L. C. AW. 5524 TO L. KONIA

ALAELOA, LAHAINA, MAUI, HAWAII

43315

NEIL ABERCROMBIE
GOVERNOR

JAN S. GOUVEIA
ACTING COMPTROLLER

KERRY K. YONESHIGE
ACTING DEPUTY COMPTROLLER

STATE OF HAWAI'I
DEPARTMENT OF ACCOUNTING AND GENERAL SERVICES
P.O. BOX 119, HONOLULU, HAWAI'I 96810-0119

Response refer to:
MA-296(11)
MA-491

December 5, 2011

Mr. Arthur P. Valencia
Valencia Land Surveying
P.O. Box 546
Lahaina, Maui, Hawai'i 96767

Dear Mr. Valencia:

Subject: Shoreline Certification Application
TMK 4-3-03: 15
Owner: Kahana Sunset AOAO
'Alaeloa, Lahaina, Maui, Hawai'i

This shoreline was inspected on the ground on November 15, 2011 and as a result, portions of the shoreline were determined to be further mauka than delineated on the map. Before we can proceed, DLNR's Hawai'i Administrative Rules require:

1. 13-222-10(b): Revise the shoreline (map and photos) as delineated with a red dashed line on the enclosed map.

2. 13-222-19: Resolve encroachments of CRM walls, concrete and CRM stairs, geotextile sand bags, drainage culvert, and concrete revetment upon State of Hawai'i owned property.

   In past practice, when dealing with shoreline encroachments, the Department of Land and Natural Resources has utilized solely the boundary of record to determine the presence of any encroachments. However, the Department of Land and Natural Resources has been advised by the Attorney General that, according to the Hawaii Supreme Court in County of Hawaii v. Sotomura, "land below the high water mark, like flowing water, is a natural resource owned by the state subject to, but in some sense in trust for, the enjoyment of certain public rights.'" In addition, the Attorney General opined that although the State may own land within the shoreline area that does not mean the State owns or is responsible for any structures placed it by others or the abutting landowner. Therefore, any structures located seaward of the proposed shoreline location as determined by staff would be considered encroachments upon State land. Furthermore, shoreline easements should include any structures in the shoreline area, even if the structures are located within the

record boundary of the property. Please contact the Maui District Branch of the Department of Land and Natural Resources Land Division at 984-8103 to resolve these encroachments.

After completion of the above, please submit a minimum of seven (7) copies of the revised map (including a minimum of two (2) photo index maps), three (3) copies of the revised photos, and confirmation of the resolution of the encroachment so that the certification process can be completed.

Should you have any questions on this application, please call me at 586-0390.

Very truly yours,

REID K. SIAROT
State Land Surveyor

Enclosure

cc: Ian Hirokawa
Andy Bohlander
Daniel Ornellas

TRUE
SCALE: 1"=20'

P A C I F I C O C E

" SHORELINE " FOLLOWS ALONG THE SEAWARD FACE OF THE CRM AND CONCRETE SEAWALL, ALONG TOP BANK, STAIR BOTTOM STEP , ALONG TOP OF CRM RETAINING WALL AND ALONG TOE BANK ON JULY 1, 2011 AT 2:00 PM.

RECORD HIGH WATER MARK

HIGHEST WASH OF WAVES AS DETERMINED BY KAZUTAKA SAIKI, STATE SURVEYOR IN 1971.

191°15'10" — 464.83 (record)

Emergency Permit No. (SM3 2003/0001)

CONCRETE FOOTING
Area=+/-58sq.ft.

Encroachment 2:
Portion CRM retaining wall
Area=+/-66sq.ft.

Encroachment 3:
Portion Concrete Revetment
Area=+/-485 sq.ft.

PERMIT ISSUED 4/15/75

TOE CONCRETE REVETMENT

TOP CONCRETE REVETMENT

168°17'51" 27.62

270°11'59" 3.98

257°27'07" 18.44

215°05'27" 18.11

195°38'31" 45.77

207°11'21" 52.69

314°21'30" — 73.69

146°49'13" 27.64

162°39'07" 16.13

143°34'52" 40.84

112°00'48" 18.99

11°24'51" 32.16

168°58'53" 7.03

153°47'59" 14.98

143°11'56" 7.12

172°46'44" 13.05

197°57'53" 14.76

62°04'24" 4.23

26°36'26" 5.15

133°03'04" 11.41

142°49'13" 11.90

29°51' 2.84

126°30'12" 3.15

208°48'30" 29.63

207°50'27" 14.48

300°54'10" 3.74

209°50'03" — 127.88

190°28'53" 8.76

119°51' — 268.00

ISSUE: CRM retaining wall

ISSUE: Concrete steps and geotextile bags

ISSUE: CRM stairs and footing

ISSUE: CRM stairs and footing

Shoreline located at the mauka face of the concrete seawall

Shoreline located along the top bank

Shoreline located along makai face of CRM ret. wall

Shoreline located at the upper reaches of the wash of the waves along the erosion scarp

Shoreline located at the tcp of the concrete stairs

Shoreline located at the upper reaches of the wash of the waves along the erosion scarp

see inset

EXISTING BUILDING A

EXISTING BUILDING F

PARKING STALLS

CRM SEA WALL

CONCRETE SEA WALL

CONCRETE DECK

Previous Emergency Permit SM5 960005

Emergency Permit SM3 2009/0005

CRM RETAINING WALL

ROCK WALL

TOP BANK

TOE BANK

BBQ

DITCH

INSET
1" = 10'

11'

11'

12'

10.5'

15'

4'

s map is based from a survey performed on July 1, 2011.

ISAAC DAVIS HALL
ATTORNEY AT LAW
2087 WELLS STREET
WAILUKU, MAUI, HAWAII 96793
(808) 244-9017
FAX (808) 244-6775

January 20, 2012

Mr. Reid K. Siarot
State Land Surveyor
Department of Accounting and General Services
State of Hawaii
P.O. Box 119
Honolulu, HI 96810-0119

Re: Shoreline Certification Application
TMK No. (II) 4-3-003:015
Owner: Kahana Sunset AOAO
'Alaeloa, Lahaina, Maui, Hawai'i

Dear Mr. Siarot:

This letter is written on behalf of the Kahana Sunset AOAO. The Kahana Sunset AOAO is the owner of TMK No. (II) 4-3-003:015 and the applicant for a shoreline certification for that property.

The Kahana Sunset AOAO retained Licensed Professional Land Surveyor Arthur P. Valencia of Valencia Land Surveying to prepare a survey of the shoreline of this property. He conducted an appropriate study and based upon the pertinent statutory and regulatory standards prepared a survey of the shoreline as of July 1, 2011 as shown on a survey map that he dated September 26, 2011.

You conducted an inspection on November 15, 2011 and, through a letter dated December 5, 2011, wrote that portions of the shoreline were determined to be further mauka than delineated on Mr. Valencia's map. You have provided a map indicating in detail, with a red dashed line, where you believe the shoreline should be located.

The Kahana Sunset AOAO wants to be as cooperative as possible with you in locating the shoreline. We have conferred with Mr. Valencia and with Mr. Chris Hart of Chris Hart & Partners and we all concur on the contents of this letter and in seeking the relief requested within this letter.

We are prepared to agree with most of the changes that you have proposed as delineated with the red dashed line on your map. There are, however, two important exceptions that I address below.

First, we believe that the shoreline is correctly located by Mr. Valencia in front of Existing Building F. Here, Mr. Valencia has located the shoreline "along the seaward face of the CRM and Concrete Seawall." The State suggests that the shoreline, in this area, is more properly located "at the mauka face of the concrete seawall."

We believe that Mr. Valencia's location is consistent with the State's regulations. The Department of Land and Natural Resources, State of Hawaii has promulgated administrative rules entitled "Shoreline Certifications" in HAR §§ 13-222-1 et.seq. HAR §13-222-16, entitled "Field survey," states, in subsection (b):

> The licensed land surveyor shall utilize the following criteria in locating and marking the shoreline:
>
> > (10) When the shoreline is located at a seawall, the seaward face of the seawall shall be marked and identified on the map.
> >
> > (11) When the shoreline is located at a revetment, the bottom ("toe") of the revetment shall be marked and identified on the map.

These particular regulations require that when any "seawall" or "revetment" is within the area that is to be delineated as the "shoreline" that the shoreline is to be located at "the seaward face" or "the bottom toe." Based upon HAR §§ 13-222-16(10) and (11), we request that the State reconsider its proposed location of the shoreline and agree with Mr. Valencia's location in this area.

Second, we believe that the shoreline is correctly located by Mr. Valencia to the north of Encroachment 2. Here, Mr. Valencia has located the shoreline "along toe bank." The State suggests that the shoreline, in this area, is more properly located "along the top bank."

We believe that Mr. Valencia's location is consistent with the State's regulations here as well. HAR §13-222-16(b) provides that the licensed land surveyor shall utilize the following criteria in locating and marking the shoreline:

> > (6) On cliffs or ledges where a ground survey of the shoreline may be extremely difficult, the top of the cliff or ledge may be marked and depicted as the shoreline on the map.

In this instance, there is no factual basis for marking the shoreline at the top of the cliff or ledge. A ground survey of the shoreline was not "extremely difficult" in this case. Mr. Valencia was able to conduct a ground survey lower down, "along toe bank." Based upon HAR § 13-222-16(6), we request that the State reconsider its proposed location of the shoreline in this second area and agree with Mr. Valencia's location here as well.

We must point out that the "seawall" or "revetment" in front of the Existing F Building was constructed at the same time as the F Building and at the same time as the original Kahana Sunset development was constructed. The initial building permits for the Kahana Sunset were issued in 1967. Mr. Valencia's shoreline survey dated September 26, 2011 shows the "shoreline" as determined by Kazutaka Saiki, State Surveyor, in 1971. The 1971 "shoreline" is located far makai of the seawall or revetment fronting Building F. As such, there was no State jurisdiction invoked at the time Building F and the wall were constructed. The Coastal Zone Management Act had not yet been enacted. Permits were subsequently issued, as shown on Mr. Valencia's survey map, for repairs to the wall.

The wall in front of Building F was legally constructed at the time it was built and has been legally repaired since then. The "shoreline" may have "eroded" over time. One purpose of locating the shoreline at the base or toe of seawalls or revetments in instances such as these is to maintain the original jurisdictional distinction without creating what are more properly characterized as existing non-conforming uses.

As importantly, in both of these cases the location of the shoreline must be based upon the pertinent statutory and regulatory definition of the "shoreline." HRS § 205A -1 defines "shoreline" as follows:

> .... the upper reaches of the wash of the waves, other than storm and seismic waves, at high tide during the season of the year in which the highest wash of the waves occurs, usually evidenced by the edge of vegetation growth, or the upper limit of debris left by the wash of the waves.

The "Shoreline Certifications" rules contain a definition of the "shoreline" in HAR § 13-222-2 that is identical to the statutory definition recited above. Subchapter 3 of these rules contains directions on how the "shoreline" is to be located.

The Hawaii Supreme Court has construed these statutory and regulatory provisions in *Diamond v. DLNR,* 112 Haw. 161, 145 P.3d 764 (2006).

What is critical in locating the "shoreline" is to determine "the upper reaches of the wash of the waves at high tide during the season of the year in

which the highest wash of the waves occurs." Importantly, the upper reaches of the wash of the waves during storm and seismic events must be excluded.

Put simply, once storm and seismic events are excluded, we do not believe that there is any evidence that "the upper reaches of the wash of the waves at high tide during the season of the year in which the highest wash of the waves occurs" is as far inland or mauka as the State apparently believes.

This is the season in which the highest wash of the waves occurs. As such this is the appropriate season to measure the upper reaches of the wash of the waves at high tide. Personnel at the Kahana Sunset have been instructed to witness and photograph the location of the high wash of the waves at high tide at both of the contested locations. We are informed that in neither case have waves been seen or photographed "at the mauka face of the concrete seawall" in the first instance or "along the top bank" in the second instance. Instead, the upper reaches of the wash of the waves at high tide, in both instances, have been witnessed and photographed in the locations shown on Mr. Valencia's map. We are willing to provide you with copies of these photographs.

The Kahana Sunset would like to avoid, if at all possible, a formal challenge to these two locations by the State. We hope that, based upon this letter and the photographs, the State will agree with Mr. Valencia's delineation in these two locations. If the State is not willing to accept Mr. Valencia's locations of the shoreline in the two areas above based upon this letter and the photographs, may we suggest, before the State rejects our delineation of the "shoreline" in these two areas or publishes notification of a certification, that a meeting take place on site with the primary participants being Mr. Valencia and Andy Bohlander and/or yourself, to determine if some agreement can be reached amicably on the location of the "shoreline" in these two areas.

Thank you for your consideration of these matters. Please feel free to contact me if you would like to discuss the foregoing further. I look forward to hearing from you.

Sincerely yours,

Isaac Hall

IH/gr
Cc: Kahana Sunset AOAO
Arthur P. Valencia
Chris Hart & Partners
Samuel J. Lemmo
Andy Bohlander

NEIL ABERCROMBIE
GOVERNOR

DEAN H. SEKI
ACTING COMPTROLLER

JAN S. GOUVEIA
DEPUTY COMPTROLLER

STATE OF HAWAI'I
DEPARTMENT OF ACCOUNTING AND GENERAL SERVICES
P.O. BOX 119, HONOLULU, HAWAI'I 96810-0119

Response refer to:
MA-296(11)
MA-491

RECEIVED
APR 18 2012
CHRIS HART & PARTNERS, INC.
Landscape Architecture and Planning

CC: Raymond
09/14/12

April 17, 2012

Mr. Isaac Hall
Attorney at Law
2087 Wells Street
Wailuku, Maui, Hawai'i 96793

Dear Mr. Hall:

Subject: Shoreline Certification Application
TMK 4-3-03: 15
Owner: Kahana Sunset AOAO
'Alaeloa, Lahaina, Maui, Hawai'i

This is in response to your letter dated January 20, 2012 regarding the recommended changes to the proposed shoreline. Your letter states that you believe the shoreline was correctly located by Mr. Valencia "along the seaward face of the CRM and Concrete Seawall" in front of Existing Building F and "along toe bank" to the north of Encroachment 2 and asks that the State agree with Mr. Valencia's delineation in these two locations.

The State determines shoreline based on evidence of "the upper reaches of the wash of the waves". In front of Building F, the State found a significant amount of beach sand in the seawall drains indicating that the waves wash through the drains, at least to the mauka side of the CRM and concrete seawall. The State also found that a portions of the CRM seawall were undermined due to wave action at the toe of the structure. To the north of Encroachment 2, the State identified evidence of the upper reaches of the wash of the wave along the middle-upper face of the pali and determined the shoreline to be at the top bank pursuant to Hawaii Administrative Rules §13-222-16(b)(6). The top bank is in vertical alignment with the upper reaches of the wash of the waves along the middle-upper face of the pali and therefore serves as a convenient means of surveying the recommended shoreline location.

The State already conducted a site inspection on November 15, 2011 with Kahana Sunset AOAO representative Karen Krenz and did not receive substantial evidence to dispute its shoreline determination. The State does not plan to conduct another site visit.

Should you have any questions on this application, please call me at 586-0390.

Very truly yours,

REID K. SIAROT
State Land Surveyor

cc: Kahana Sunset AOAO
Arthur P. Valencia
✓Chris Hart & Partners
Samuel J. Lemmo
Andy Bohlander

APPENDIX F
Wave Climate Study

WAVE CLIMATE STUDY
FOR
KAHANA SUNSET

Prepared for:

Apartment Owner Association Of
Kahana Sunset Condominium Complex
Ka'anapali, Maui

Prepared by:
Marc M. Siah & Associates, Inc.

August 2011

Marc M. Siah & Associates, Inc.

Consulting Civil • Structural • Environmental & Ocean Engineers
820 South Beretania Street, Suite 201, Honolulu, Hawaii 96813

WAVE CLIMATE STUDY FOR KAHANA SUNSET

TABLE OF CONTENTS

SECTION	TITLE	PAGE
	EXECUTIVE SUMMARY	
1.0	INTRODUCTION……	1
2.0	WAVE CLIMATE AT NORTHWEST MAUI ……..	3
3.0	WAVE CONDITIONS AT KAHANA SUNSET ……..	8
4.0	CONCLUSIONS……	18
	REFERENCES……..	20

LIST OF FIGURES

FIGURE	TITLE	PAGE
1	Hawaii Wave Climate and Buoy Resources……	2
2	Scatter Diagram for Incident Waves from North Direction at 200 Meters Water Depth offshore of Northwest Maui..……	4
3	Scatter Diagram for Incident Waves from Northeast Direction at 200 Meters Water Depth offshore of Northwest Maui……..	5
4	Scatter Diagram for Incident Waves from East Direction at 200 Meters Water Depth offshore of Northwest Maui……..	5
5	Scatter Diagram for Incident Waves from North Direction at 50 Meters Water Depth offshore of Northwest Maui……..	6
6	Scatter Diagram for Incident Waves from Northeast Direction at 50 Meters Water Depth offshore of Northwest Maui……	7
7	Computational domain and digital elevation model …….	9
8	Wave Transformation at Northwest Maui for the Peak Swell Event…….	10
9	Significant Wave Height for the Peak Swell Event……	11
10	Maximum Water Surface Elevation for the Peak Swell Event……..	11
11	Wave Set Up for the Peak Swell Event……	12
12	Maximum Flow Speed for the Peak Swell Event……..	13
13	Mean Flow Velocity for the Peak Swell Event……	13
14	Net Current for the Peak Swell Event……..	13
15	Wave Transformation at Northwest Maui for the Moderate Swell Event.	14
16	Significant Wave Height for the Moderate Swell Event……..	15
17	Maximum Water Surface Elevation for the Moderate Swell Event……	15
18	Wave Set up for the Moderate Swell Event……	16
19	Maximum Flow Speed for the Moderate Swell Event……	17
20	Mean Flow Velocity for the Moderate Swell Event……	17
21	Net Current for the Moderate Swell Event……	17

LIST OF TABLES

TABLE	TITLE	PAGE
1	Storm Events and Wave Parameters for simulation of Wave Transformation in Kahana Sunset Embayment……..	8

EXECUTIVE SUMMARY

Kahana Sunset Condominium Complex on the northwest Maui coast experiences problems with chronic erosion of the beach and wave overwash of the existing sea wall foundations and other coastal fortifications along the coastline. In order to address the problem, the AOAO initiated this wave climate study to evaluate wave transformation process for swells and wind generated waves, as they approach the area and impinge upon the coastline. The area is subject to north swells and trade wind waves which undergo significant transformation due to shallow shelves, headlands, and the fringing reefs. A reef system, which extends about 1 km offshore, further complicates the nearshore wave conditions. This study defines the wave climate at northwest Maui from 10 years of hindcast data and provides insights into the nearshore wave conditions through high-resolution modeling of the coastal processes. Trade wind waves from the east and northeast prevail most of the year. Because of large oblique incident angles to the shore, refraction typically reduces the height of the wind waves to 1 meter (3 feet) or less before reaching the reef. The wind waves do not usually present a coastal hazard at Kahana Sunset. This study considers two swell conditions from the 10 years of hindcast data, namely, the peak swell event, as well as a moderate event occurring in the early and late swell season, for detailed site-specific analysis. Results of computer simulations for these two swell events indicate that a major swell event from the north can produce waves large enough to inundate the shore line fronting the property and scour the seawall foundation. The uneven wave height and oblique wave direction at the shore generate a clockwise circulation in the embayment that together with wave actions erode the beach fronting the property. The moderate swell, in contrast, might not be an erosion hazard, but is sufficient for the surge to reach the seawall foundation and may cause erosion and undermining of the footings of the structures over time.

.

1.0 Introduction

Marc M. Siah and associates, Inc. was commissioned by the Kahana Sunset Condominium AOAO, to conduct a wave transformation study for deepwater waves as they approach the North West Maui shoreline, and impinge upon the coast at or in the general vicinity of the Kahana Sunset Condominium. The Condominium complex located on the northwest of Maui coast is subject to north swells and trade wind waves which undergo significant transformation due to shallow shelves, headlands, and the fringing reefs. The coastline fronting the property historically experiences problems associated with chronic erosion of the beach and wave overwash of existing sea wall foundations and other coastal fortifications along the coastline. Maintenance of the beach and the existing coastal fortifications pose a serious insecurity and financial burden on the AOAO resources. It is inferred therefore, that a better understanding of the wave climate nearshore of the property will help to enhance prudent planning for coastal fortification and maintenance of the beach front infrastructure for Kahana Sunset condominium development.

This report is prepared based on wave hind casting data and computer model runs for wave transformation by Applied Research International, which has compiled the hind cast data and a working wave transformation model. The study is conducted utilizing a 10-year deep water wave hindcasting data to determine the significant wave heights and directions at appropriate locations offshore of the general vicinity of the project site. Wave hindcasting refers to a method of analysis by which wave data can be derived from wind filed information collected at various locations and buoys around the globe from the knowledge of the wind speed, fetch, and duration. The hind cast wave data is then used to prepare scatter diagrams for incoming swells and wind generated waves to determine the prevailing wave directions and heights offshore of the project site. Subsequently, two wave conditions, namely peak swell and moderate swell, are depicted as representative major and moderate swell events, respectively, for wave transformation simulation in the embayment between 50 meters (150 feet) depth contour line and the coastline. The wave transformation process which entails, refraction,

diffractions and shoaling of waves as they approach the coast, for these two wave climates, would provide the magnitudes of wave setup, water elevations and flow speed in the embayment and along the coastline fronting the property. These results can then used to plan coastal fortification, repair, and or nourishment of the beach.

Hawaii's mid-Pacific location and its massive archipelago give rise to unique wave climate not seen in other places. The wave climate and buoy resources around the Hawaiian Island chain, are illustrated in Figure 1.

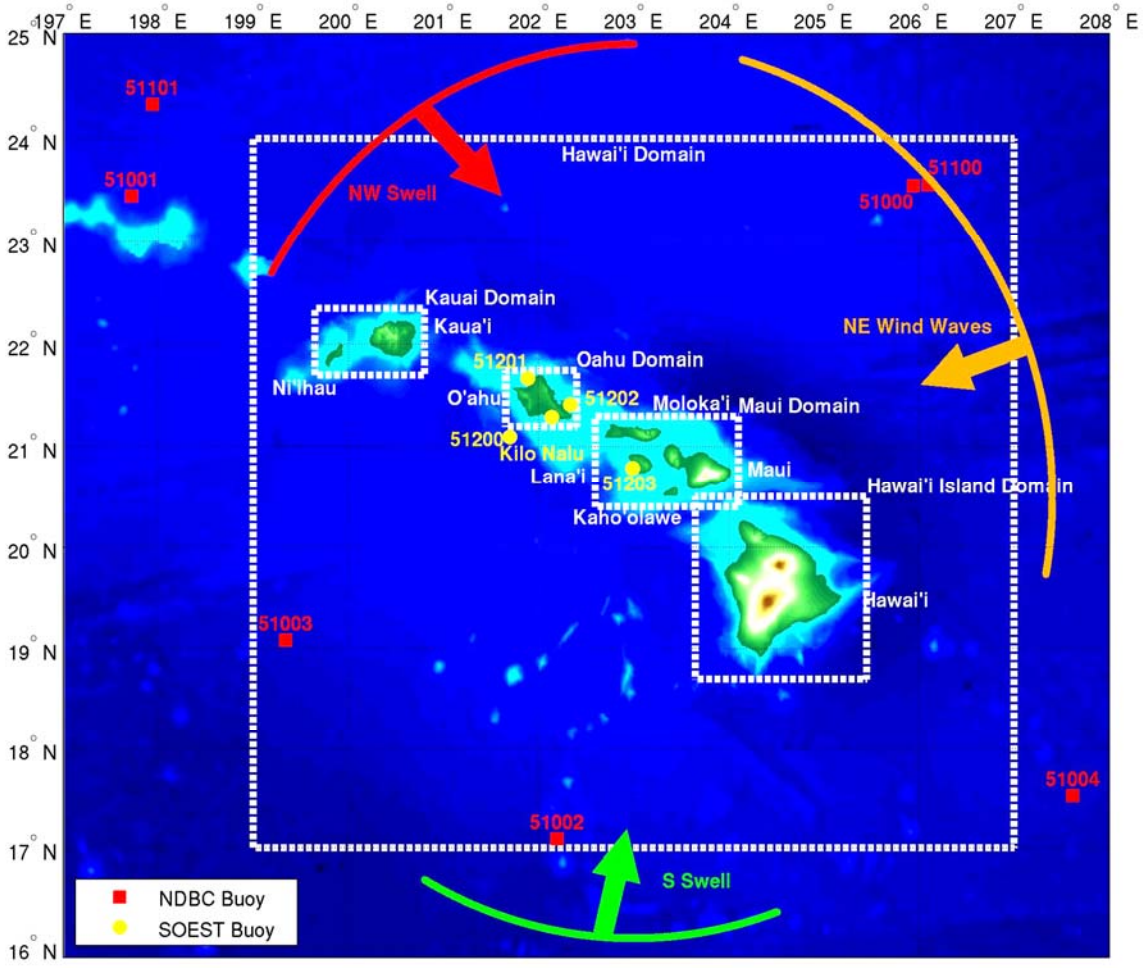

Figure 1- Hawaii Wave Climate and Buoy Resources (Stopa et al., 2011b)

Typically, extratropical storms near Kuril and Aleutian Islands generate northwest swells reaching up to 5 meters (15 feet) significant wave heights in Hawaiian waters during winter months. The south facing shores of the islands chain, however, experience more gentle swells from extratropical storms off of Antarctica during the summer months. As reported by Yang and Chen (2003), the Hawaiian Islands create a local diurnal wind system and modify the northeast trade winds all year round. The speeding up of the winds in channels and around the headlands further augment the far-field wave energy and creates localized wave patterns that are known to be treacherous to mariners (Stopa, et al., 2011a, b).

Review of existing buoys operated by the National Data Buoy center (NDBC) and the UH School of Ocean and Earth Science and Technology (SOEST) indicate that theses buoys are mostly at locations either off the island chain, or at nearshore locations not directly relevant to the project site. For this study, therefore, we have utilized the 10-years hindcast data as compiled and presented by Stopa et al (2011b) in "Assessment of Wave Energy Resources along the Hawaiian Islands Chain", to investigate the wave climate in northwest Maui and the vicinity of the project site. Using a Boussinesq Model developed by Lynett et al (2002), the hindcast wave data is then subject to transformation process consisting of wave refraction, diffraction and shoaling, to describe and present detailed wave conditions at the project site.

2.0 Wave Climate at Northwest Maui

Arinaga and Cheung (2011) developed 10 years of hindcast global wave data and Stopa et al. (2011b) extended the data around the Hawaiian Islands to higher resolution for the National Marine Renewable Energy Center. They utilized a system of nested global, regional, and island-scale spectral wave models based on WW3 of Tolman (2008) and SWAN of Booij et al. (1999) with wind forcing from the NOAA Final Global Tropospheric Analysis (FNL) and the UH Weather Research and Forecasting (WRF) model of the Hawaiian Islands. Figure 1, illustrates the setup of the island-scale SWAN domains within the Hawaii regional WW3 domain, which in turn is nested inside a global WW3 domain. The model system accounts for all distant swells and wind waves as well as their transformation around the Hawaiian Islands due to shoaling, refraction,

and local winds. The hindcast significant wave height from Stopa et al. (2011b) has a root-mean-square error of 0.23-0.49 m against measurements at the 12 buoys shown in Figure 1.

The hourly wave hindcast data from 2000 to 2009 covers the entire globe at 1°×1.25° resolution, which is refined to 1 km square around the Hawaiian Islands. Scatter diagrams of the wave data at 200-meter (600 feet) water depth location (156.715°W 21.015°N) offshore of Kahana Sunset are prepared and presented in Figures 2 through 4.

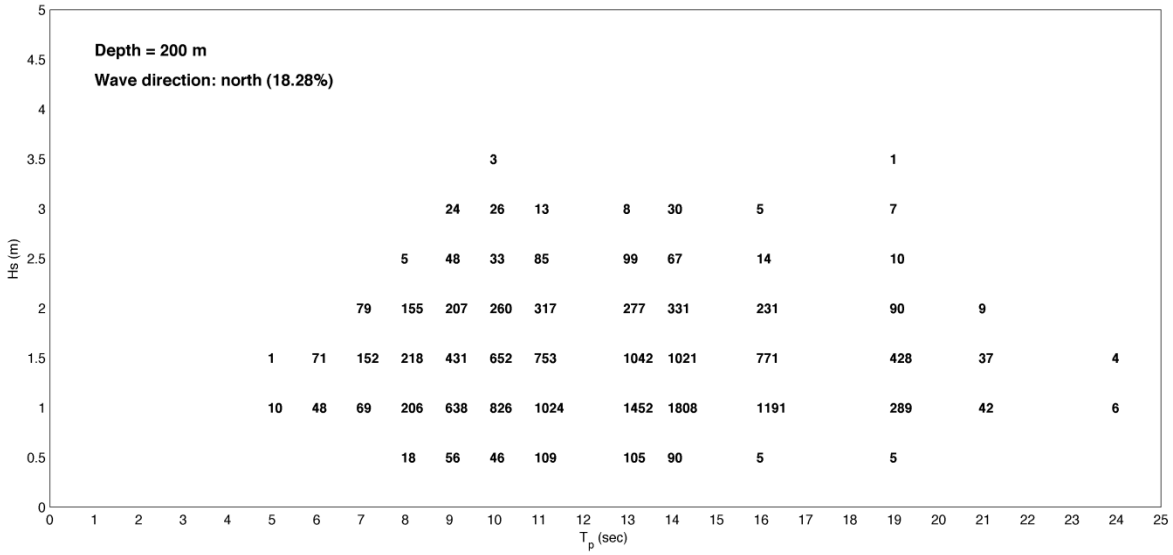

Figure 2- Scatter Diagram for Incident Waves from North Direction at 200 Meters Water Depth offshore of Northwest Maui

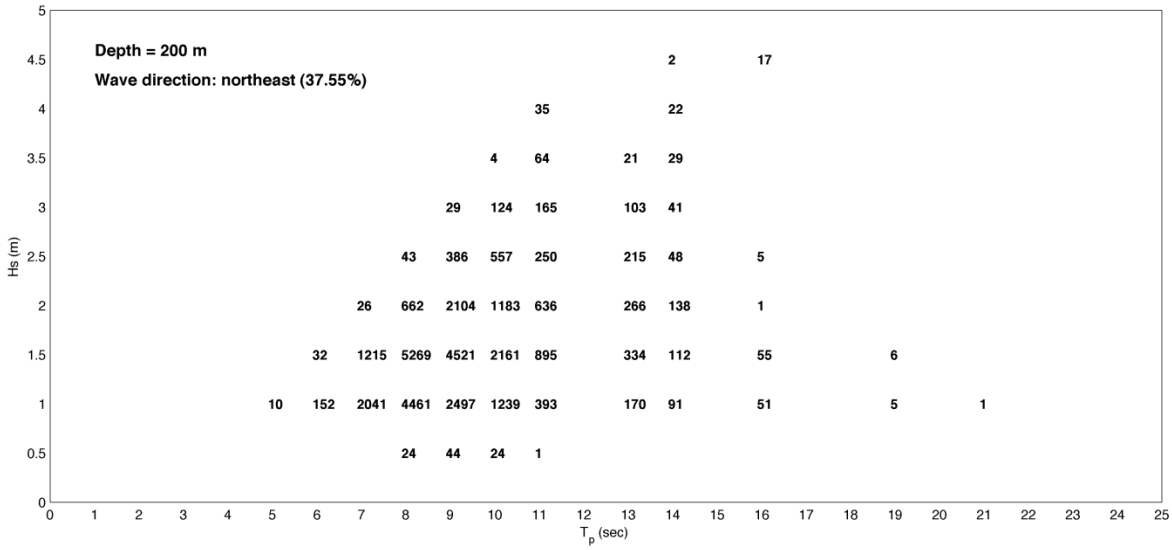

Figure 3- Scatter Diagram for Incident Waves from Northeast Direction at 200 Meters Water Depth offshore of Northwest Maui

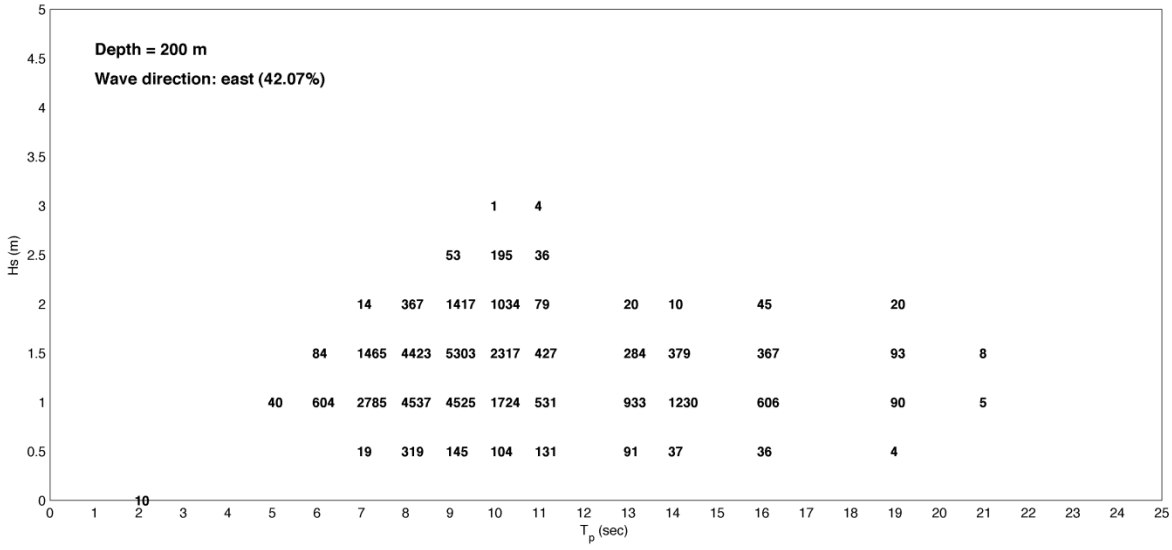

Figure 4- Scatter Diagram for Incident Waves from East Direction at 200 Meters Water Depth offshore of Northwest Maui

Each entry denotes the number of hours for the corresponding significant wave height and peak period in the 10 years of continuous data base. Because of sheltering effects by east Molokai and west Maui, waves approach the area from a direction between north and east 97% of the time. The south swells, after being refracted by the shallow shelf to the south and overshadowed by the year-round wind waves, account for the remaining 3% of the data.

The incident waves from the north, which account for 18% of the data, are primarily swell events with periods of 10 seconds or greater. The incident wave height is smaller compared to the open ocean swells because of sheltering by east Molokai. The project location, however, is exposed to some severe late-season swells, when extratropical storms migrate from Kuril islands towards the Aleutian Islands. The majority of the waves from the northeast and east, which have periods of less than 10 seconds, are wind waves generated by the year-around trade winds.

Waves from the north to east have to refract around the insular slope of northwest Maui before reaching Kahana Sunset. Similar scatter diagrams depicted in Figure 4 and Figure 5, show that 41% of the waves arrive at 50-meters (150 feet) water depth (156.688°W 20.992°N) from the north whereas 59% are from the northeast. The wave height is also further reduced at this location due to refraction at large oblique incident angles to the shore.

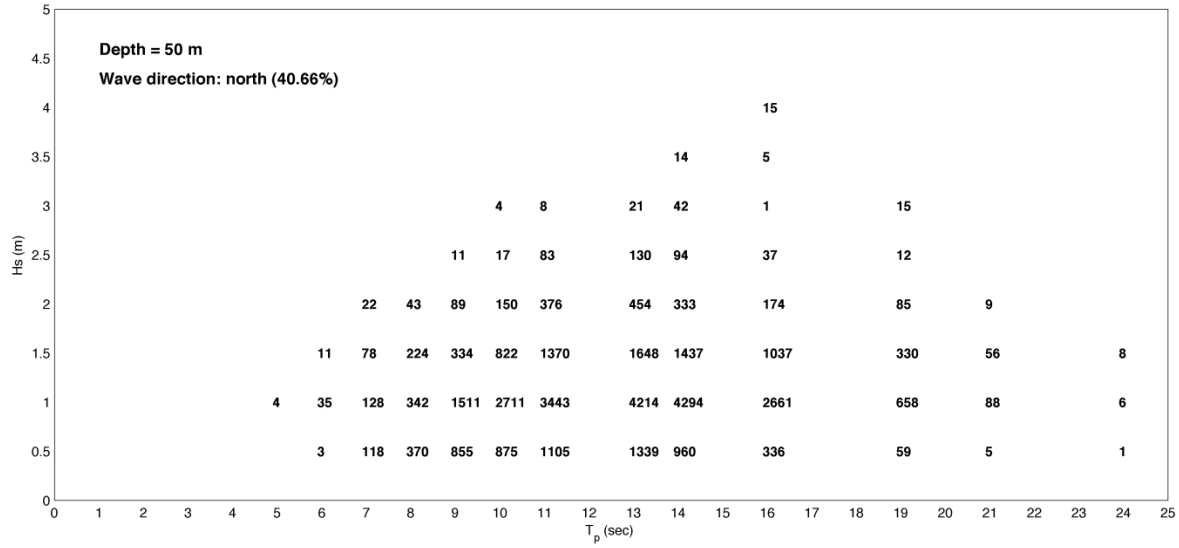

Figure 5- Scatter Diagram for Incident Waves from North Direction at 50 Meters Water Depth offshore of Northwest Maui

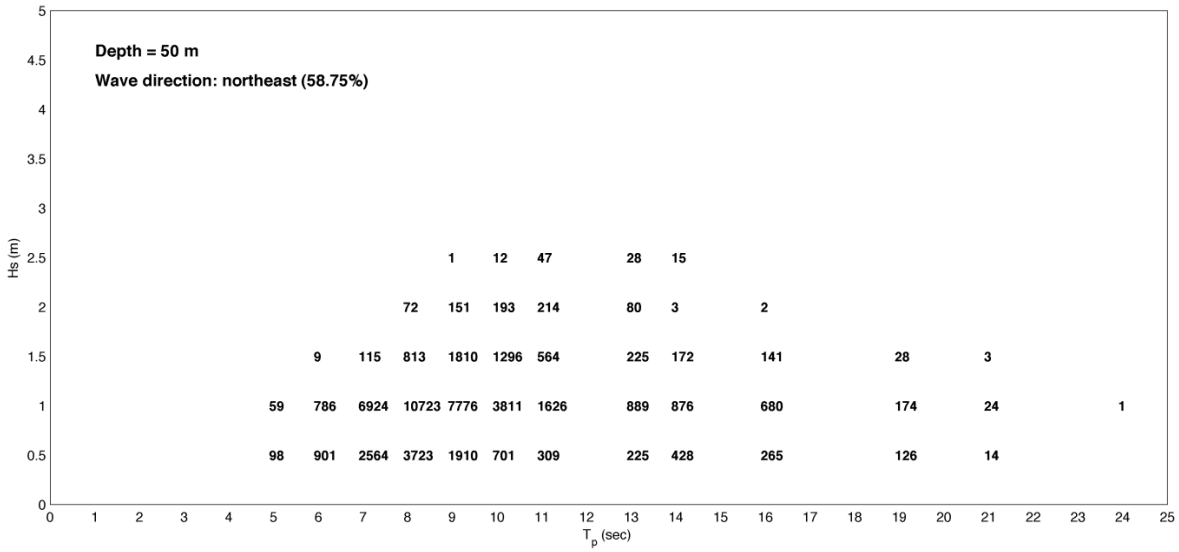

Figure 6- Scatter Diagram for Incident Waves from Northeast Direction at 50 Meters Water Depth offshore of Northwest Maui

As mentioned earlier in this report, Kahana Sunset coastline in specific and northwest Maui coast in general is subject to the north swells and trade wind waves which undergo significant transformation by shallow shelves, headlands, and fringing reefs. This transformation results in chronic erosion of the beach and wave overwash of the seawall foundation. In reference to the discussion in the previous paragraphs, the wave data at 50-meters (150 feet) water depth is used as the input for Boussinesq computer model to simulate the wave-by-wave propagation and transformation in the Kahana Sunset embayment.

Typically, the wind waves have significant wave heights of less than 1 meter (3 feet) and are unlikely to have significant negative impacts on the coastline. We, therefore consider two representative swell events as summarized in Table 1, for determining the effects of wave transformation in the embayment on beach erosion and undermining of the coastal structures fronting the Kahana Sunset Condominium Complex. The first event, has the maximum significant wave height of 4 meters (12 feet) in the 10 years of hindcast data, and is representative of a major swell event which occurs once every few years. The second event has

a smaller wave height and a shorter period corresponding to a moderate, but more frequent event typically occurring in the early and late swell season that might produce hazardous conditions at the project site.

Event	Sig. Wave Height	Peak Period	Peak Direction
Peak Swell	4 meter (12 feet)	16 sec	7.5°
Moderate Swell	2 m (6 feet)	13 sec	7.5°

Table 1- Storm Events and Wave Parameters for simulation of Wave Transformation in Kahana Sunset Embayment

3.0 Wave Conditions at the Kahana Sunset

Wave transformation process over the reef and into the bay is accomplished using a Boussinesq model which accounts for wave refraction-diffraction around headlands, shoaling and breaking over the reef, and runup on the coast. Modeling of near-shore wave transformation requires high-resolution bathymetry and topography. Figure 7, shows the computational domain used, which includes a long stretch of coastline north of the project site to capture diffracted waves from the headlands. The digital elevation model consists of UH SOEST multi-beam data at 50 meter (150 feet) resolution, the National Elevation Dataset at 30 meters (90 feet) resolution, and most importantly, FEMA and USACE LiDAR data from the 40 meter (120 feet) water depth to the 15 meter (45 feet) elevation at 2 to 4 meters (6 to 12 feet) resolution. The bathymetric data for the area shows a reef system along the coastline that has significant influence on the nearshore wave field. We utilize the Boussinesq model of Lynett (2002), which was validated for application in Hawaii by Cheung et al. (2003), to describe wave-by-wave transformation from the 50-meters (150 feet) depth contour to the northwest Maui coast. The incident wave conditions from the hindcast data are specified near the north boundary in the form of a directional wave maker and the computation is performed for an event time of 25 minutes, which is sufficient for computation of wave statistics.

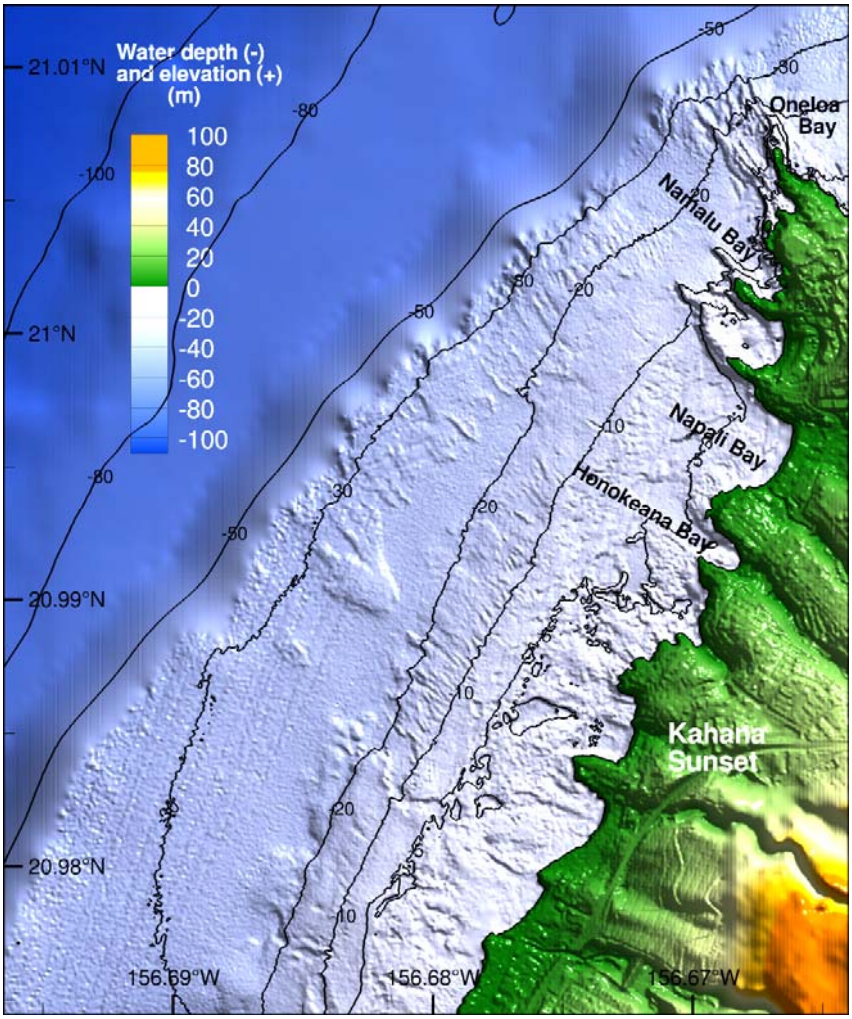

Figure 7- Computational domain and digital elevation model

The simulation of the peak swell event, i.e. 12 feet high wave undergoing transformation as it approaches the Kahana Sunset beach is accomplished using a finite-difference computer model with 10-meters (30 feet) grids. The computations are based on the Mean-Higher-High-Water (MHHW) set at approximately 0.45 meters (1.25 feet) above the mean sea level (MSL). A snapshot of the computed wave field as it embarks towards the land and approaches the coast is depicted in Figure 8.

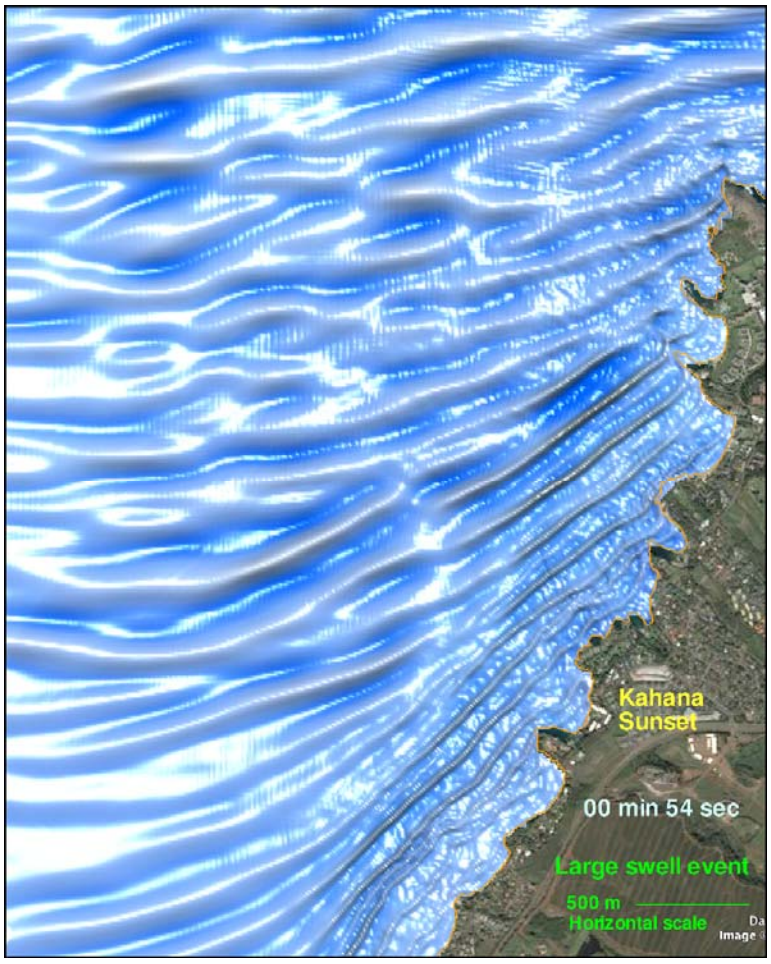

Figure 8- Wave Transformation at Northwest Maui for the Peak Swell Event

The waves from the north refract and break over the reef before reaching Kahana Sunset with smaller amplitudes. The waves approach the embayment from the northwest at an oblique angle to the beach. Due to wave transformation the significant wave heights entering the Kahana Sunset embayment will range from 0.5 to 1 meter (1.5 to 3 feet) despite having a much larger value over the reef edge as shown in Figure 9. This reduction in significant wave height, not only indicates breaking of larger waves over the reef as they enter the embayment and approach the coastline, it also shows dissipation of some of the wave energy due to effects of nearshore bathymetry and topology. As the waves approach the shore they further shoal and ultimately break causing rising of water surface elevation in the embayment. The maximum surface elevations including tides and waves in the embayment thus increase from 1.3 to 1.8 meters (3.9 to 5.4 feet) northward along the shore, as illustrated in Figure 10.

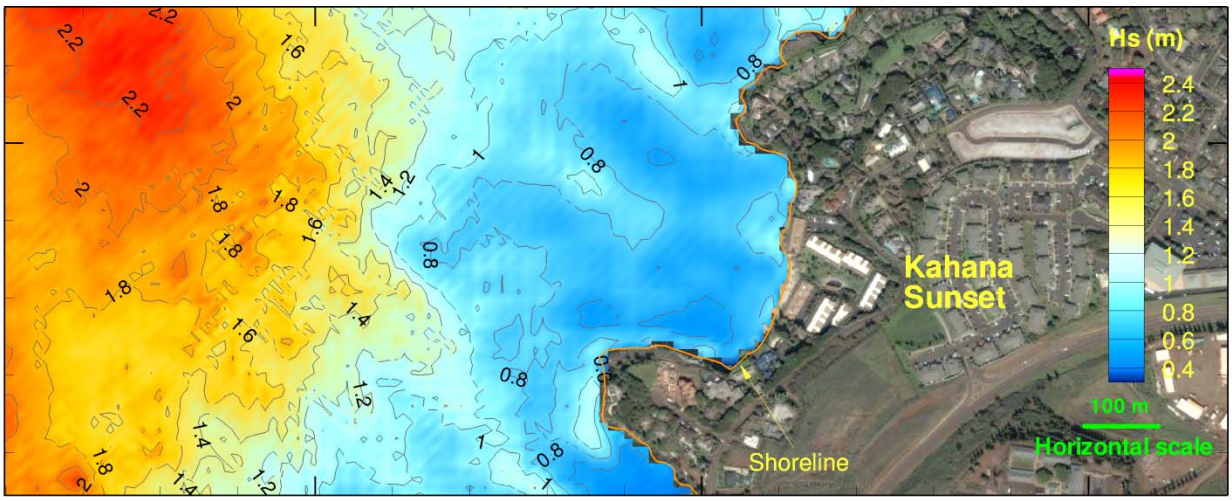

Figure 9- Significant Wave Height for the Peak Swell Event

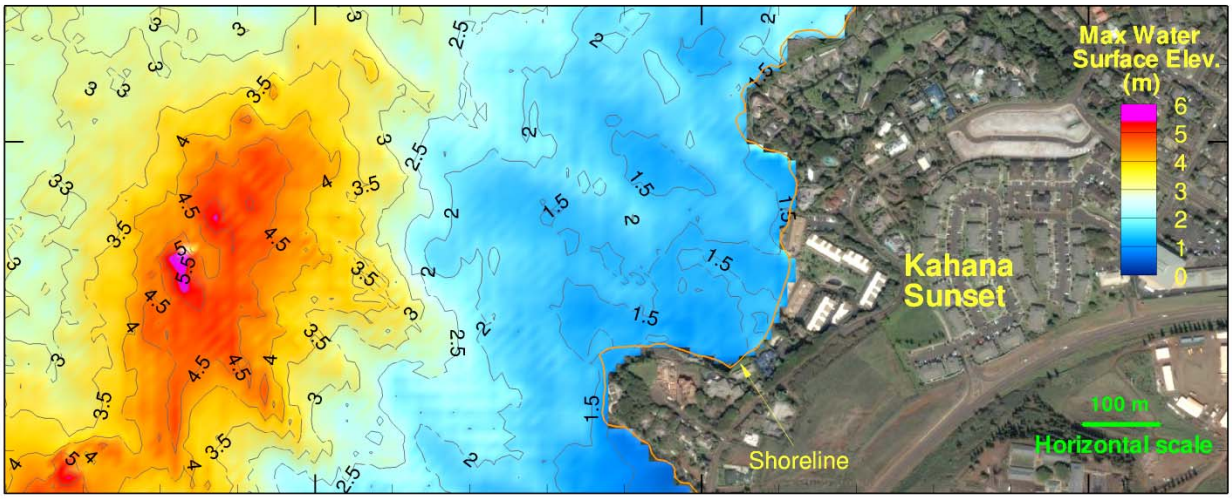

Figure 10- Maximum Water Surface Elevation for the Peak Swell Event

The wave setup which refers to the rise in water elevation due to breaking of the waves as they approach the coastline, as shown in Figure 11, amounts to less than 0.06 meter (0.18 feet). The wave setup is small because the wave height is relatively uniform over the reef flat extending approximately 400 m from the shore.

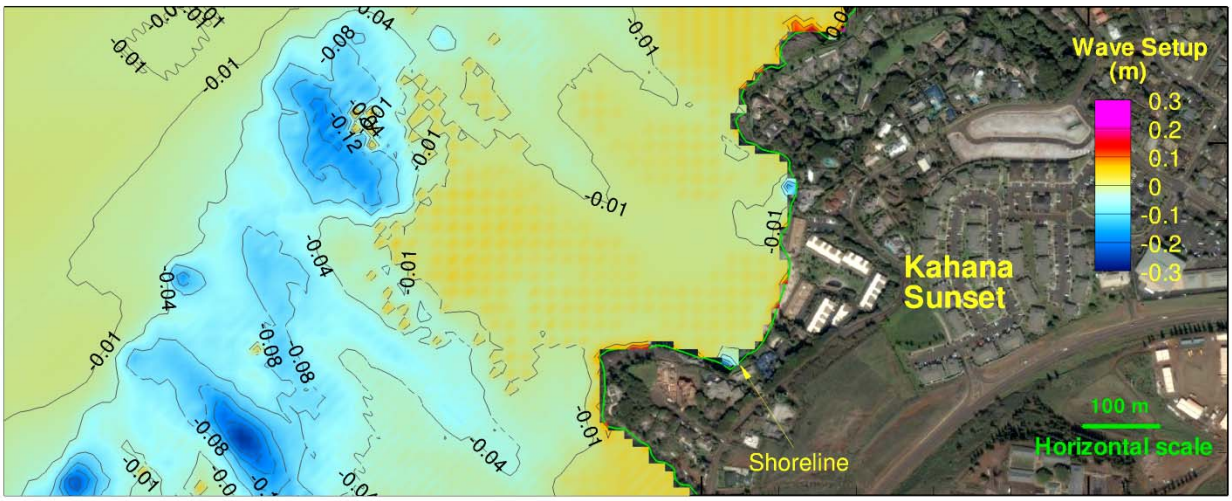

Figure 11- Wave Set Up for the Peak Swell Event

The results of the computer simulation runs further describe the flow patterns in the embayment and along the shoreline. Figures 12 and 13, show the maximum and mean flow patterns in the embayment. The flow is primarily onshore with a maximum speed of 3 m/s (9 ft/s) and a mean speed of 1.2 m/c (3.6 ft/s) at the shoreline. The northwest approaching waves and the wave height gradient along the shore, drive a net current to the south creating a clockwise mean flow in the embayment as shown in Figure 14. The net current reaches 0.66 m/s (1.98 ft/s) along the beach fronting Kahana Sunset condominium. This net long shore current is the culprit and the main mechanism for erosion of the beach during peak swell event.

Since the southern part of the embayment is steep, the sand eroded from the beach is likely deposited in numerous reef channels in the embayment. An aerial flyover and observation of the embayment clearly show these sand deposit banks.

The simulation results for the peak swell event further indicate that such events cause flooding of two computational cells on dry land that amounts to approximately 20 meters (60 feet) of inundation of the beach. In other words, peak swell event causes the floodwaters to inundate the beach fronting the Kahana Sunset Condominium reaching the existing seawall and other infrastructures on the property.

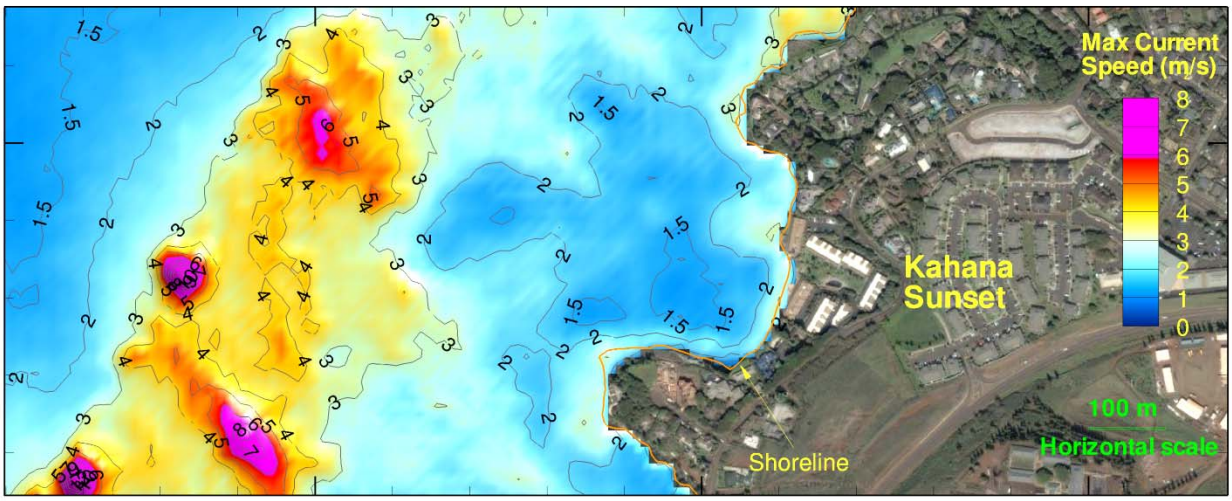

Figure 12- Maximum Flow Speed for the Peak Swell Event

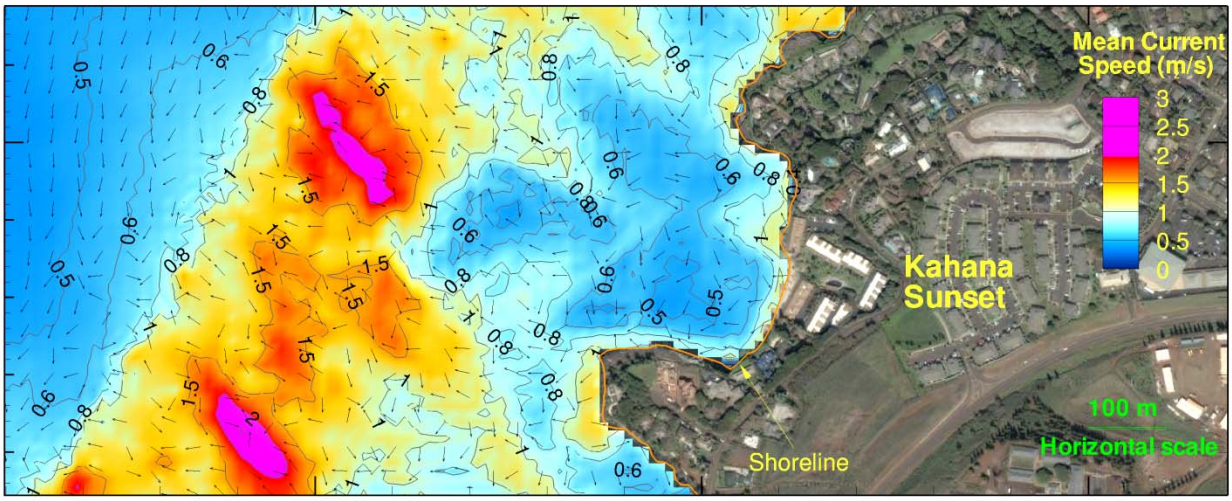

Figure 13- Mean Flow Velocity for the Peak Swell Event

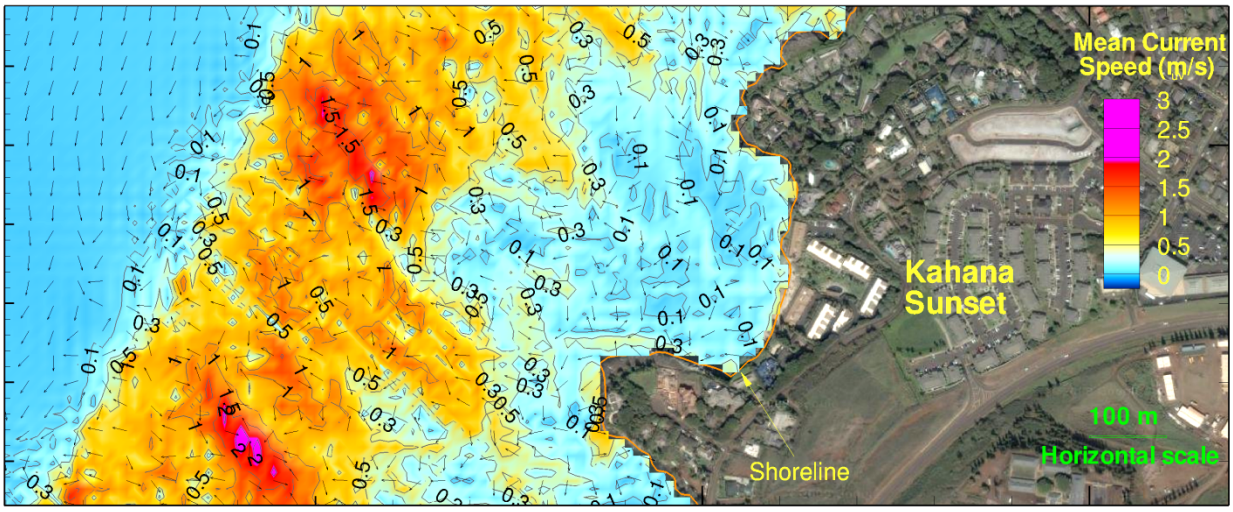

Figure 14- Net Current for the Peak Swell Event

The simulation for a moderate swell event is accomplished using a 7-meters (21 feet) grid size finite-difference model due to the shorter wavelengths of these swells. The mean higher high water (MHHW) level is still used in the computations. Similar to the peak event, a snapshot of the computed and transformed wave field is illustrated in Figure 15.

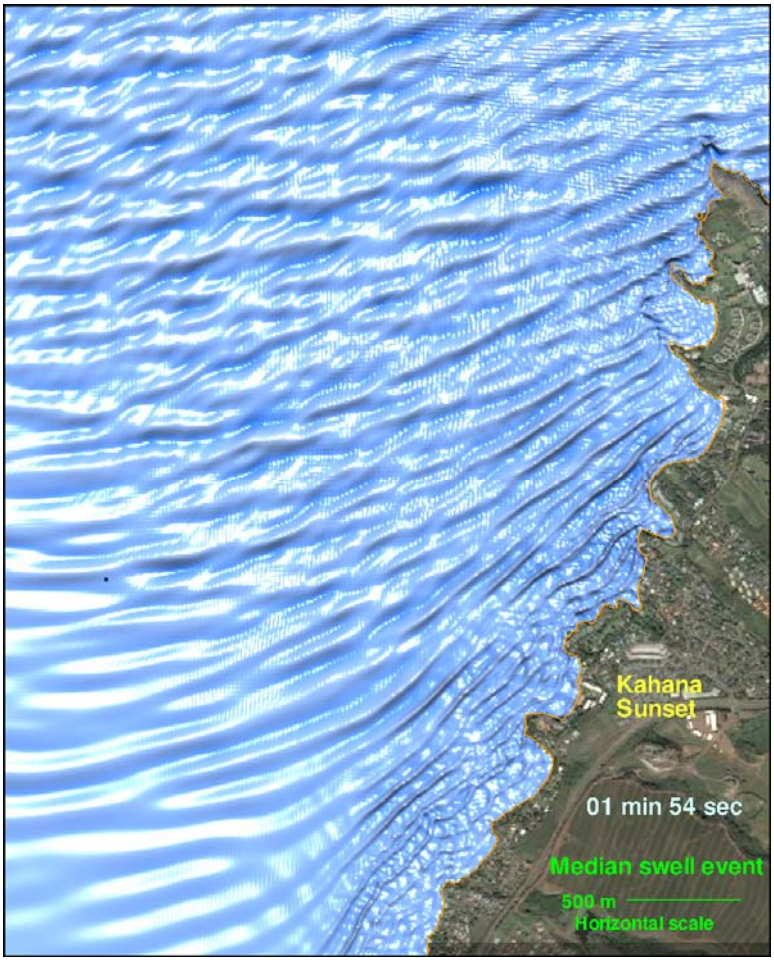

Figure 15- Wave Transformation at Northwest Maui for the Moderate Swell Event

In comparison to the peak event, he shorter and smaller waves of a mean event as they approach the coast from the north, break in shallower water over the reef. The shorter waves are also refracted to a greater extent in the embayment and approach the beach normally at Kahana Sunset as opposed to an oblique angle in the case of peak events.

The significant wave height distribution and maximum water surface elevations depicted in Figures 16 and 17, indicate focusing of wave energy mostly toward the center of the embayment as the moderate swell event approaches the land.

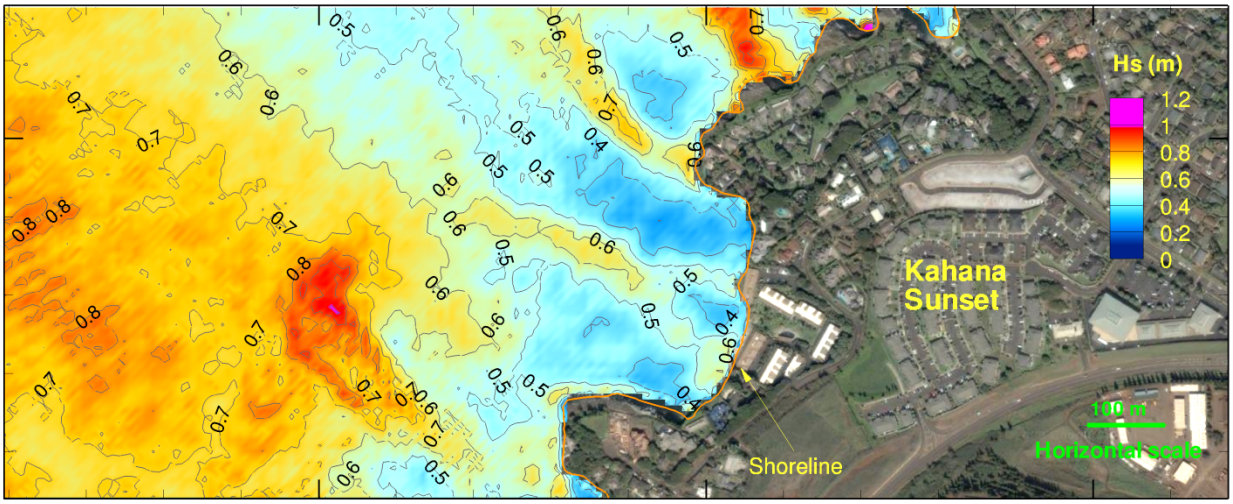

Figure 16- Significant Wave Height for the Moderate Swell Event

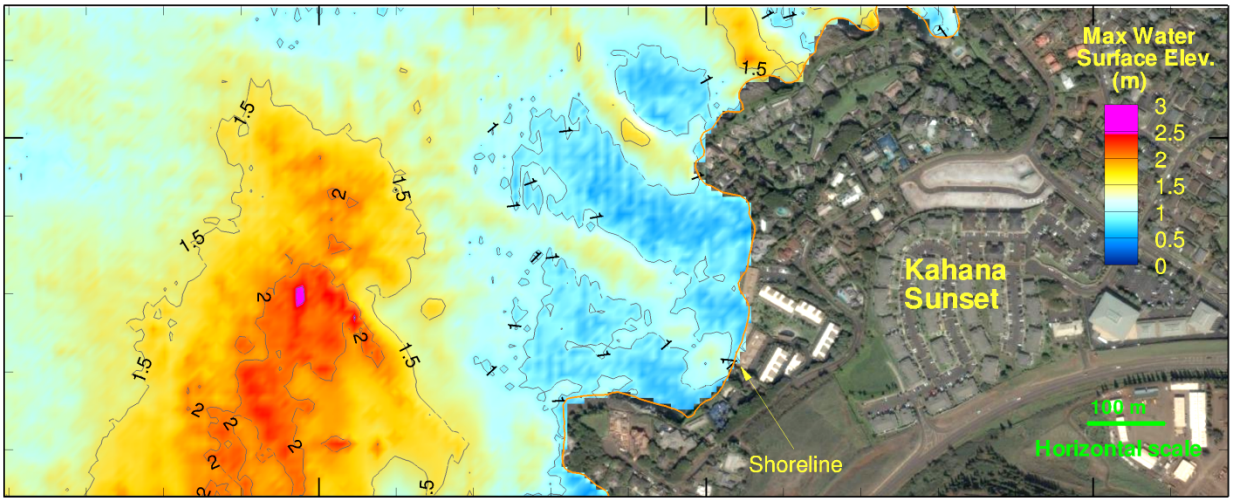

Figure 17- Maximum Water Surface Elevation for the Moderate Swell Event

An inspection of the bathymetry of the embayment presented in Figure 4, shows the high energy region follows the natural channels and tidal pools in the reef system. These small geological features are more effective in transforming the shorter waves of a moderate swell event.

The maximum water surface elevation including tides is 1 meter (3 feet) at the shore with flooding of 2 grid cells equivalent to approximately 14 meters (42 feet) of beach inundation. This level of flooding and inundation is enough to reach sections of the seawalls and other infrastructures at Kahana Sunset.

The wave setup or the rise of water level due to breaking of the wave nearshore, as depicted in Figure 18, is less than 0.04 meter (0.12 feet) along the shoreline.

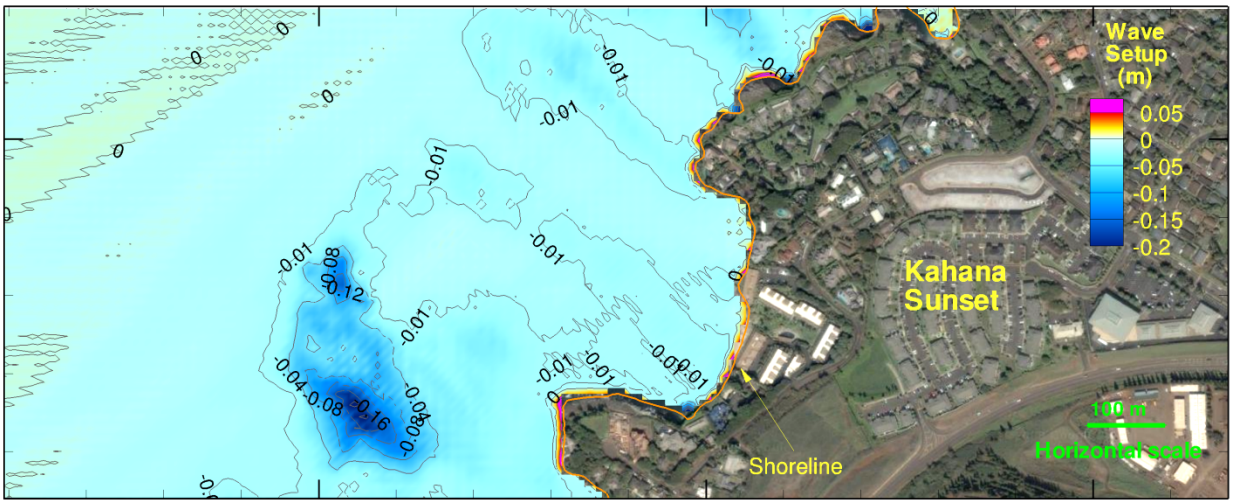

Figure 18- Wave Set up for the Moderate Swell Event.

The maximum and the mean current speeds as shown in Figure 19 and Figure 20, are is 2.8 m/s (8.4 ft/s) and 0.9 meter/s(2.7 ft/s), respectively, along the southern half of the coastline in the embayment. In contrast, the net current speed created during a moderate swell event as presented in Figure 21, reaches a maximum of 0.52 m/s (1.56 ft/s) along the shore, but the nearshore flow pattern is not well defined and unlikely to introduce net transport of the sand in the offshore direction. It may only induce minor localized lateral and insignificant movement of sand along the beach.

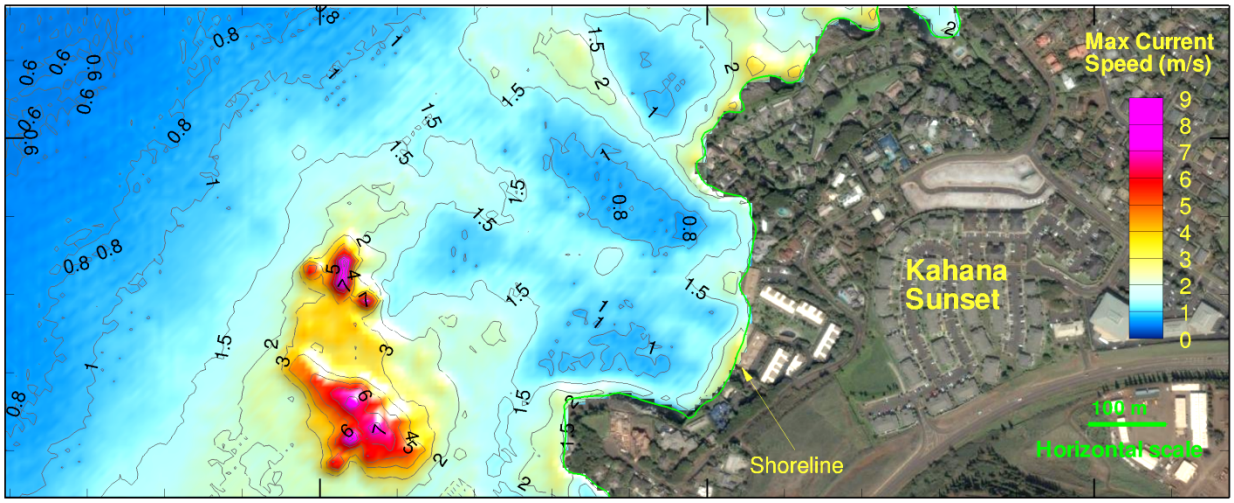

Figure 19- Maximum Flow Speed for the Moderate Swell Event

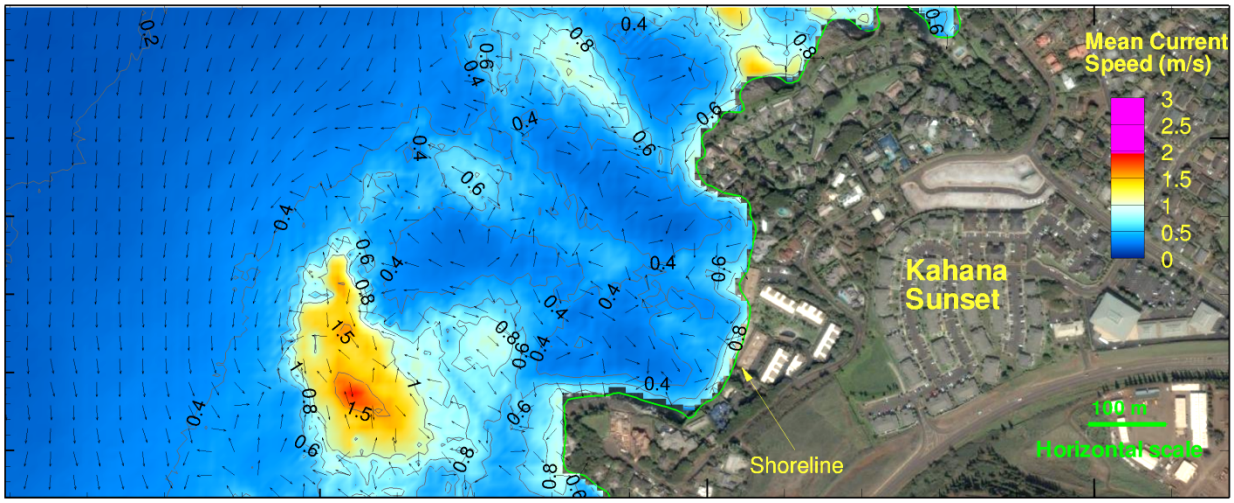

Figure 20- Mean Flow Velocity for the Moderate Swell Event

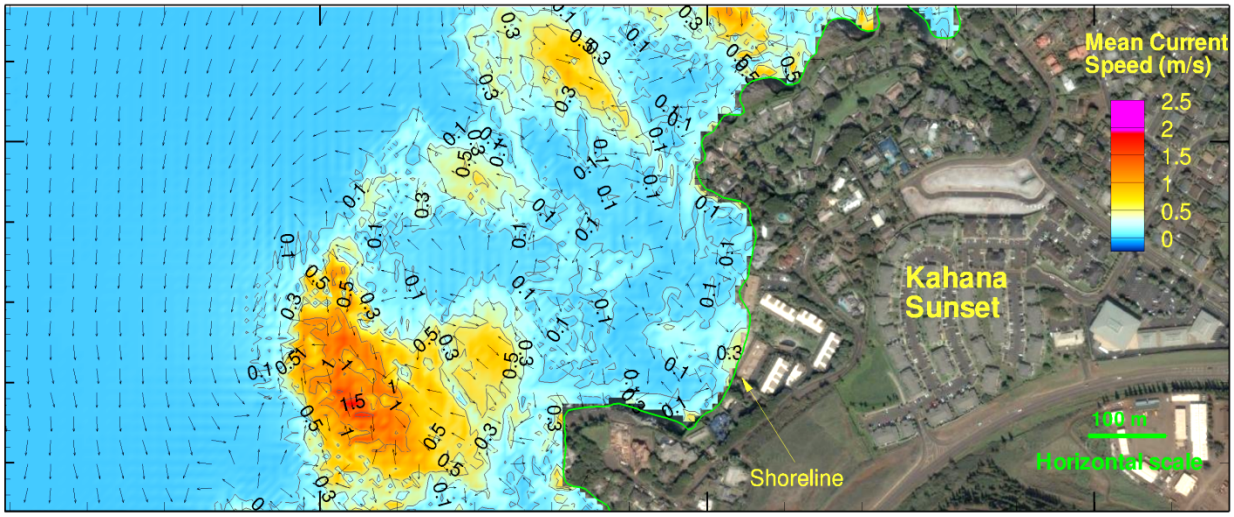

Figure 21- Net Current for the Moderate Swell Event

4.0 Conclusions

In order to address the chronic beach erosion at Kahana Sunset condominium located on northwest Maui, the AOAO initiated a wave climate study to evaluate wave transformation process for swells and wind generated waves, as they approach the area and impinge upon the coastline. The area is subject to north swells and trade wind waves which undergo significant transformation due to shallow shelves, headlands, and the fringing reefs. The coastline fronting the property historically experiences problems associated with chronic erosion of the beach and wave overwash of existing sea wall foundations and other coastal fortifications along the coastline.

The study utilizes 10-years of hindcast data presented in the Wave Energy Resources along the Hawaiian Island Chain by Stopa et al. (2011b) and a finite-difference Boussineq computer model to simulate swell and wind wave transformation as they enter the embayment and approach Kahana Sunset coastline. The region is primarily subject to the north swells and northeast wind waves and experience little effect from the south swells. The large oblique incident angles as well as the shallow nearshore reef system, greatly reduce the height of the wind waves as they approach the Kahana Sunset. The study, therefore, simulates transformation of two different wave climates, namely, a peak swell event and a moderate swell event, respectively, for assessment of their impacts on Kahana Sunset beach. The peak swell event has a significant wave height of 12 feet and represents a major swell which may occur once in ten years or so. The moderate swell represents a 6-feet wave with smaller period which occurs frequently in early and late season and may produce hazardous conditions at the site.

Simulation results for a peak swell event, indicate that transformed wave heights in the embayment range between 1.5 to 3 feet despite having a much larger value over the reef. Although the wave setup is less than 0.18 feet, the surge may overtop the beach with floodwater inundating approximately 60 feet inland reaching the existing seawalls and other infrastructures. This inundation is the major reason for undermining and erosion of footings of walls and other coastal fortifications on the property.

The oblique wave incidence at the shore creates a clockwise mean flow in the embayment. The net longshore current along the beach fronting the Kahana Sunset reaches 1.98 ft/s. This net long shore current is the culprit and the main mechanism for erosion of the beach during peak swell event. Since the southern part of the embayment is steep, the sand eroded from the beach is transported and deposited in the reef channels in the embayment.

The simulation results for the waves from a moderate swell event with smaller wave height and shorter periods, confirm that these waves, in contrast to peak swell, follow the channels in the reef system and are refracted to a greater extent closer to the coast and approach the shore almost normally. The moderate event creates a maximum wave set up of 0.12 ft along the shore, and causes inundation up to of 42 feet inland. While such events might not present a beach erosion hazard, the surge reaching the seawall, however, may cause erosion and undermining of the footings of the structures over time. The moderate swell generates a maximum net current of 1.56 ft/s along the shore, but the flow pattern is not well defined and unlikely to cause a net transport of sand in the offshore direction.

References

Arinaga, R.A. and Cheung, K.F. (2011). Atlas of Global Wave Energy from 10 Years of Reanalysis and Hindcast Data. Renewable Energy, 36, in press.

Booij N., Ris, R.C., and Holthuijsen, L.H. (1999). A third-generation wave model for coastal regions, Part I, model description and validation. Journal of Geophysical Research, 104(C4): 7649-7666.

Cheung, K.F., Phadke, A.C., Wei, Y., Rojas, R., Douyere, Y.J.M., Martino, C.D., Houston, S.H., Liu, P.L.-F., Lynett, P.J., Dodd, N., Liao, S., and Nakazaki, E. (2003). Modeling of storm-induced coastal flooding for emergency management. Ocean Engineering, 30(11), 1353-1386.

Lynett, P.J., Wu, T.R., and Liu, P.L.-F. (2002). Modeling wave runup with depth-integrated equations. Coastal Engineering, 46(2), 89–108.

Stopa, J.E., Cheung, K.F., and Chen Y.-L. (2011a). Assessment of wave energy resources in Hawaii. Renewable Energy, 36(2): 554-567.

Stopa, J.E., Filipot, J.F., Cheung, K.F., and Chen, Y.-L. (2011b). Wave energy resources along the Hawaiian Island chain. Renewable Energy, in preparation.

Tolman H.L. (2008). A mosaic approach to winds wave modeling. Ocean Modelling, 25(1): 35-47.

Yang, Y. and Chen, Y.L. (2003). Circulations and rainfall on the leeside of the island of Hawaii during HaRP. Monthly Weather Review, 131(10): 2525-2542.

.

APPENDIX G
Geoanalytical Report

March 13, 2006

GEOANALYTICAL REPORT

KAHANA SUNSET CONDOMINIUM SEAWALLS
4909 Lower Honoapi'ilani Road
Kahana, Maui, Hawai'i

Weidig Geoanalysts Project No. 05-0098.001

GEOANALYTICAL REPORT
KAHANA SUNSET CONDOMINIUM SEA WALLS
4909 LOWER HONOAPI'ILANI ROAD
KAHANA, MAUI, HAWAI'I

Project No: 05-0098.001

Date: March 13, 2006

Prepared for:

Kahana Sunset A.O.A.O.
Attn: Susan Flaherty, Site Manager
4909 Lower Honoapi'ilani Road
Lahaina, Maui, Hawai'i 96761

Prepared by:__

Weidig Geoanalysts
1200 College Walk, Suite 121
Honolulu, Hawai'i 96817

Authored by:

Paul C. Weidig
Licensed Professional Engineer No. 8,047-C

March 13, 2006

Project No. 05-0098.001

To: Kahana Sunset A.O.A.O.
4909 Lower Honoapi'ilani Road
Lahaina, Maui, Hawai'i 96761

Attn: Susan Flaherty, Site Manager

Subject: Geoanalytical Investigation
Kahana Sunset Condominium Sea Walls
4909 Lower Honoapi'ilani Road
Kahana, Maui, Hawai'i

Attached is our report of the geoanalytical investigation we conducted at the above-captioned site. Our principal conclusions and recommendations follow:

- The borings at Building "F" revealed that the sea walls are backfilled with loose to semicompact sand to a depth of about nine feet below the walkway surface. Probing revealed that the backfills are underlain by loose to very loose sand to a depth of about 16.5 feet to 19 feet behind the linear wall systems, and to an average depth of 22 feet behind the serpentine wall system. At and below these depths is a solid basalt lava platform. Ground water was intercepted at elevations that reflect adjacent sea level.

- The borings at Building "A" encountered surficial soils consisting of a stiff to very stiff, clayey silt to a maximum depth approaching five feet, below which is solid basalt lava rock. No ground water was discovered in these borings.

- The beach sand deposits that form the foundation for the sea walls in front of Building "F" can be grouted with microfine cement or injected with high-density polyurethane foam to create a protective curtain against future erosion that could undermine the walls. The sea cliff in front of Building "A" can be fortified against advancing erosion and undermining by the creation of a pressure-grouted curtain along the cliff edge. Specific recommendations are presented in the report.

If you have any questions regarding this report, or if we can be of assistance to you in any other way, please do not hesitate to call. Mahalo for this opportunity to be of service.

Respectfully submitted,

Paul C. Weidig, P.E.
President

PCW/lr/05-0098.001

TABLE OF CONTENTS

EXECUTIVE SUMMARY

INTRODUCTION ..... Page 1
- Purpose 1
- Scope 1

FINDINGS 2
- Site Description 2
- Site History 2
- Geologic Setting 3
- Earth Materials 3
  - Sea Walls 4
  - Sea Cliff 4
- Ground Water 4
- Sea Cliff Stability 4

CONCLUSIONS 4
- Soil Plasticity 5
- Bearing Capacity 5
- Earth Pressures 5
- Soil Hydraulics 5
  - Table 1 - Soil Porosity 6
- Foundation Conditions 6

RECOMMENDATIONS 6
- Wall Stabilization 6
  - Grouting Option 6
  - Foam Injection Option 7
  - Sea Cliff Stabilization 7
- Supplemental Services 7

LIMITATIONS 8

APPENDICES
- Appendix A - Field Exploration
  - Vicinity Map ..... Plate No. A1
  - Site Plan A2
  - Logs of Borings ..... A3 - A11
  - Unified Soil Classification System A12
- Appendix B - Laboratory Testing
  - Atterberg Limits Test Data ..... Plate No. B1
  - Mechanical Sieve Analysis Test Data B2
  - Direct Shear Test Data B3
- Appendix C - References

DISTRIBUTION

INTRODUCTION

Purpose

A geoanalytical investigation has been conducted at the locations of three sea walls adjacent to Building "F" and along the crest of a sea cliff adjacent to Building "A" at Kahana Sunset condominium in Kahana on Maui. The purposes of this study have been to evaluate subsurface soil, ground water and other geologic conditions next to the walls and sea cliff, to prepare specific recommendations for use in rehabilitating and protecting the walls at Building "F" against future distress, and to offer recommendations for protection of Building "A" against the advance of sea cliff erosion and undermining.

Scope

On December 6 through 8, 2005, our field engineer conducted a reconnaissance of the property and mapped the locations of nine test borings and probings that were advanced to a maximum depth of about 22 feet below ground surface on the landward side of the subject walls and sea cliff. Coring through a concrete walkway between one of the walls and Building "F" was required at three locations to facilitate exploration. Our field engineer logged, classified and recovered relatively undisturbed samples of the earth materials drawn from selected vertical intervals in each boring, and recorded the penetration resistance profiles of each probing. Ground water level observations were recorded during and at intervals after completion of the borings, which were backfilled with tamped soil and, where drilled through the walkway, concreted following exploration.

The samples were transported to our office for laboratory testing and further classification. The laboratory testing program comprised determinations of natural moisture content, dry unit weight, plasticity, gradation and direct shear strength.

This report contains our findings regarding site soil, ground water and other geologic conditions; conclusions pertaining to soil erosion, retaining wall bearing capacity, earth pressures against the walls, settlement and wall foundation conditions, and sea cliff stability; and, recommendations for corrective work.

A detailed description of the field exploration program is presented in Appendix A. The location of the project site is shown in relationship to surrounding landmarks and cultural features on Plate No. A1, Vicinity Map. The approximate locations of the test borings and probings are depicted in relationship to the existing sea walls, the shoreline and adjacent condominium buildings on Plate No. A2, Site Plan. Geotechnical descriptions and related data recorded during the field exploration phase of our study are displayed on Plates No. A3 through A11, Logs of Borings. A key to the soil symbols and identification criteria used on the boring logs is presented on Plate No. A12, Unified Soil Classification System.

The results of the natural moisture content and dry unit weight tests are posted on the Logs of Borings, on which are also indicated the types of other laboratory tests conducted on corresponding samples. The remaining laboratory test data are contained in Appendix B. The results of the plasticity tests are shown on Plate No. A1, Atterberg Limits Test Data. The results of the gradation tests are presented on Plate No.

B1, Mechanical Sieve Analysis Test Data. A summary of the strength tests appears on Plate No. B3, Direct Shear Test Data. References consulted during the course of our investigation are listed in Appendix C.

FINDINGS

Site Description

As shown on Plate No. A1, the Kahana Sunset condominium complex is situated on an irregularly-shaped parcel encompassing approximately 4.467 acres on the makai side of Lower Honoapi'ilani Road between Hale Malia Place and Hui Road East in Kahana (State of Hawai'i, 1996). The entire development consists of 80 one- and two-storey, wood-frame townhouses in groups of ten to 12 contiguous units among six buildings (Michael T. Suzuki & Associates, Architects, 1971). The buildings are adjoined by paved parking facilities, two driveways leading to separate entrances off the highway, concrete walkways, a central swimming pool, and the resident manager's office building.

As depicted on Plate No. A2, the subject sea walls front Building "F" and are stone masonry structures up to 12 feet high. In addition to functioning as a wave barrier, each wall retains a fill. The two southerly sea walls adjoin concrete lānais, are linear, and span about 25 feet and 57 feet, respectively, including a staircase descending to the beach. The third wall is a serpentine structure about 70 feet long and retains a sandy area studded with coco palms. A concrete walkway punctuated by planting strips stretches along the makai side of the building.

The sea cliff below Building "A" is a nearly vertical precipice that reaches an average height of about 25 feet above ocean level. A stone masonry wall less than 18 inches high roughly parallels the edge of the cliff and similar wall up to four feet high extends toward the face of the cliff from the southwest corner of the building. The area between a concrete lānai on the makai side of the building and the walls is occupied by a lawn and bordering shrubs.

Site History

In 1975, a stone revetment was constructed along the undermined sections of the wall system fronting Building "F," although it was recognized at the time as an emergency rather than a permanent measure. In 1992, a more substantial repair was undertaken and consisted of stacked, concrete-filled fabric bags which were then armored with gunite. Nonetheless this repair failed when one of the walls next to a staircase collapsed and sinkholes appeared behind the walls prompted yet another effort in 2003. Engineering advice included the placement of rock mounds in front of the walls to dissipate wave energy, to impede sand migration and to thwart erosion (Marc M. Siah & Associates, 2003). Drawings of design schemes to protect the walls and staircases were prepared. These included 1) founding the lower edges

of the staircases on reinforced concrete footings bearing on bedrock; 2) creating a subsurface, reinforced concrete buttress, also founded on bedrock, along all of seaward wall faces; 3) replacing the walls with stone-veneered, reinforced concrete structures incorporating an outer foundation wall based on bedrock; 4) backfilling the voids beneath the walls with 8- to 12-inch-diameter rock grouted with lightweight concrete and backfilling the areas behind the walls with lightweight concrete (Marc M. Siah & Associates, 2003). It is our understanding that only the last scheme was actually implemented. In 2004, more sinkholes developed behind the walls, apparently because the concrete and stones that had been placed in the original cavities beneath the walls had been founded on sand that was undermined by sea wave action. A repair consisting of backfilling these sinkholes with a base layer of reinforced concrete and restoring grade to walkway level with compacted gravel is shown on additional drawings (Marc M. Siah & Associates, 2004). Despite all of these measures, parts of the walls continue to experience undermining and incipient instability, posing a major threat to Building "F."

A series of stacked and grouted rock revetments border the shoreline below the face of the sea cliff beyond Building "A." These are apparently founded on sand which has been almost completely eroded. In 1978, the cliff face was gunited in an attempt to preclude erosion of its face by wave and three sea caves up to nine feet high and projecting as much as 20 feet into the cliff face were filled with concrete (Downing and Associates, 1978). In 2000, low sea caves penetrating as much as seven feet beyond the cliff face were detected by probing (Island Geotechnical Engineering, Inc., 2000). At that time, the gunite facing appeared intact. Another investigation was undertaken in 2002, at which time sea caves extending up to 20 feet beyond the cliff face had formed and cracks had appeared through the gunite facing. It was concluded that this development posed a serious threat to the stability of Building "A" (Island Geotechnical Engineering, Inc., 2000).

Geologic Setting

The property is situated midway between Haukoe Point and 'Alaeloa Point. The beach strand is composed of coralline sand overlying shreds of pelagic coral reef which in turn overlie basaltic lava flows emanating from Pu'u Kukui, a shield volcano that built West Maui about 4.5 million years ago (Stearns, 1935).

The subject sea wall sites are indicated to be underlain by beach sand composed mainly of pulverized coral and seashells. The beach sands are extremely erodible and shift constantly under tidal action. The inland side of the wall system is underlain by a soil horizon composed of coralline sand assigned to the Jaucas series. These soils have a low expansion potential as well as a low corrosion potential with respect to uncoated steel and concrete. On relatively flat ground, such as typical of the land behind the sea wall, the erosion hazard due to water is considered slight, but susceptibility to wind erosion is considered severe where vegetation has been removed (Foote, *et al.*, 1972). The subject sea cliff is a basaltic lava prominence overlain by a thin veneer of clayey colluvial soil.

Earth Materials

Sea Walls - The test borings at these locations revealed wall backfill consisting of tan to buff, variably moist, loose to very loose, very fine to medium, poorly graded, slightly silty, coralline sand (Unified Soil Classification: SP) extending from the ground surface to a depth of about nine feet.

Below the zone of wall backfill (at and below the wall foundation level), the borings were extended by probing. The probings generate continuous profiles of soil consistency. The probing profiles suggest that the lower zone of sand reaches a maximum depth of about 23 feet, below which is a solid basalt rock platform. Further subsurface details are contained on Plates No. A3 through A8.

Sea Cliff - The test borings at this location disclosed surficial soils composed of a gray-brown, moist, medium-stiff to very stiff clayey silt (Unified Soil Classification: MH) to a maximum depth of about five feet. Below the surficial soils, the borings encountered gray-brown, highly weathered and fractured, moderately strong basalt to the maximum depth explored, approximately eight feet. Further subsurface details are contained on Plates No. A9 through A11.

Ground Water

Each test boring was checked for the presence of ground water during and upon completion of exploration. Stabilized ground water levels were measured between approximate depths 6.5 and nine feet below grade in each boring.

Because the wall backfill and foundation soils are exceedingly permeable, transient ground water levels at or above the foundation level can be expected in response to local irrigation practice, rainfall, tidal changes, or a combination thereof. No free groundwater was observed in any of the borings drilled along the edge of the sea cliff.

Sea Cliff Stability

Basaltic lava flows typically are characterized by sets of nearly vertical joints that form irregular prismatic columns. These vertical joints are usually intersected by sets of fractures oriented in more or less horizontal planes, so that the rock mass is actually composed of many blocks of varying size. Sea wave surges, in addition to eroding the gunited sea cliff face, can hydraulically pluck the exposed, weaker blocks which, once quarried, will remove support from other overlying blocks. The unsupported blocks can remain in overhanging positions for relatively short periods until the friction along the columnar joints is released. Sea caves caused by hydraulic churning at the base of the cliff may remain stable for a considerable time, even if they increase in depth, because of the arching capability of the rock. Eventually, however, as the caves widen, the arching support can fail suddenly, causing the formation of higher but narrower ceilings.

CONCLUSIONS

Soil Plasticity

The results of the Atterberg limits tests, shown on Plate No. B1, indicate that the surficial soils above and adjacent to the sea cliff have moderately high plasticity characteristics (plasticity index = 30 percent) and moderately high water retention properties (liquid limit = 68 percent). The plasticity index is the maximum range of water contents which a soil can assume under natural conditions. The liquid limit is the maximum amount of water that a soil is capable of absorbing without becoming fluid. The plastic limit is the minimum amount of water a soil can hold without crumbling.

The results of the gradation tests, appearing on Plate No. B2, indicate that the wall backfills are composed of more than 99 percent sand and less than 1 percent silt or clay. The tests yielded an average coefficient of uniformity (C_u) at 1.7 and a coefficient of curvature (C_z) at 1.6. For well-graded sands, C_u must be greater than 6.0 and C_z must lie between 1.0 and 3.0. Therefore, the wall backfill soils are poorly-graded sands.

Bearing Capacity

The results of this investigation indicate that the undisturbed soils supporting the sea walls can sustain directly-applied loads of light to intermediate intensity. Direct shear strength tests conducted on samples of the wall backfill, which cone penetration data suggest is similar to the foundation soils, indicate that they are cohesionless and are typified by an internal friction angle of about 39° as illustrated on Plate No. B3. The internal friction angle is a measure of soil grittiness, while the cohesion component is a measure of soil stickiness.

Earth Pressures

The moisture content, dry unit weight and direct shear test data indicate that the sea walls are subject to active earth pressures equivalent to those exerted by a fluid weighing approximately 24 pounds per cubic foot. Since the wall is essentially undrained by weepholes or a backdrainage system, it is also susceptible to hydrostatic pressures caused by percolating irrigation and rainfall runoff water. The combine stresses created by buoyant soil weight and hydrostatic pressures can reach 73 pounds per cubic foot.

Soil Hydraulics

Calculations based on moisture content, dry unit weight, an assumed typical specific gravity of 2.43 test results and the penetration records generated by the probings yielded the following 95th percentile average soil porosity parameters:

Table 1 - Soil Porosity

Depth Interval (feet)	Soil Description	$\bar{N}$ Value (blows/ft)	Dry Unit Weight (pcf)	Moisture Content (%)	Void Ratio (*e*)	Effective Porosity (*n*, %)	Estimated Permeability (*k*, cm/sec)
0 - 9	Sand fill	7	103	16.5	0.47	32	2E-01
9 - 23	Sand and gravelly sand	5	83	38.0	0.82	45	7E-01

Foundation Conditions

The results of our investigation indicate that the sandy soils beneath the walls are amenable to stabilization and erosion protection by means of cementitious grout placement or injection with high-density, polyurethane foam. There are advantages and disadvantages associated with both methods.Permeation grouting with microfine cement would be considered desirable to avoid displacement of the beach sands and to reduce ocean contamination. Even though this approach is likely to be less expensive than foam injection, complete protection of the ocean waters cannot be guaranteed and there may be uncertainties with regard to placement control. The creation of tangent columns of polyurethane foam, although more expensive, offers greater placement control and would obviate the environmental concerns attached to permeation grouting. Recommendations for both options are presented below. The decision as to which option is more desirable should be made on the combined basis of cost, reliability and ocean protection.

RECOMMENDATIONS

Wall Stabilization

Grouting Option - Microfine, Type 1 portland cement grout is recommended. A bentonite-based or comparable additive is suggested to control bleeding. The D_{85} of the grout should be less than 6 microns. Additives to lower the grout viscosity should be used with caution to avoid oceanward grout migration. The minimum ultimate compressive strength of the grout mixture should be 100 pounds per square inch at 28 days.

Grout should be delivered through open-ended or sleeve port pipes sited in staggered rows three feet apart both in front and in back of each sea wall. This is likely to require coring through previous concrete work, at least along most of the landward side of the linear walls. The probings indicate that the depth to bedrock averages 22 feet below the ground surface behind the serpentine wall system, and varies from

16.5 to 19 feet below the walkway surface behind the linear wall systems. Grouting should extend to the bedrock surface in every case. Injection pressures should be held as low as possible and in any event should not exceed 20 pounds per square inch.

Foam Injection Option - Alternatively, tangent subsurface foam columns could be created by the Uretek® method so as to form protective curtains in back of and along the toe of each sea wall. The injection points should be spaced no farther apart than two feet on centers and should extend to bedrock along entire length of each wall. As above, this is likely to require coring through previous concrete work, at least along most of the landward side of the linear walls.

Sea Cliff Stabilization

We recommend the construction of a grout curtain similar to those discussed above for protection of the sea cliff. Bore holes, each at least four inches in diameter and spaced a maximum of three feet apart, should be drilled in a single row to a uniform depth of 18 feet below the ground surface at points that are as close as practicable to the back of the existing stone masonry wall and cliff edge in front of Building "A," as shown on Plate No. A2. The estimate total length of the line is 165 feet requiring approximately 55 boreholes, which should be drilled and grouted alternately. The grout mix should have a minimum ultimate compressive strength of 700 pounds per square inch at 28 days. Each bore hole should be grouted at a net hydraulic pressure of 1,000 to 2,500 pounds per square inch. The purpose of this recommendation is to knit together by infilling the joints and fractures in the rock so as to create a nonarticulated, erosion-resistant mass.

Some bore holes are expected to breach the ceilings of sea caves which extend beneath the rock wall. In this case, the caves should be filled with tremie concrete which should be allowed to cure for at least 10 days prior to pressure grouting. Tremie concrete should have a minimum ultimate compressive strength of 3,000 pounds per square inch at 28 days. It is not possible to estimate the volume of tremie concrete that would be required because of uncertainties regarding the frequency and geometry of the sea caves.

Additional protection against future subsurface advance of existing sea caves and the development of new ones can be provided by constructing a surf break along the base of the cliff. Typically, this would involve placement of heavy rock or precast concrete dolons from an anchored ship equipped with large cranes. The cost, however, could be prohibitive.

Supplemental Services

Weidig Geoanalysts should be retained to review the final remediation plans and specifications to determine whether the recommendations contained in this report are adequately reflected in those documents. The results of our review would be described in writing. Weidig Geoanalysts also should be retained to monitor the wall and sea cliff stabilization programs.

LIMITATIONS

This report has been prepared for the exclusive use of Kahana Sunset A.O.A.O., and its designated agents. The information contained in this report is intended for the project described. If subsurface conditions different from those described in this report are discovered during construction, then the information presented herein shall be considered invalid, unless the changes are reviewed, and any supplemental or revised recommendations issued in writing by Weidig Geoanalysts.

Site conditions and cultural features described in the text are those existing at the time of our field reconnaissance and exploration on December 6 through December 8, 2005, and may not necessarily be representative of such conditions at other places and times. Similarly, the test borings and probings represent subsurface conditions at the times and locations indicated; it is not warranted that they are representative of such conditions at other locations and times. The test boring and probing locations are referenced to a document titled: *Utility Plot Plan, 80 Unit Condominium Apts., Kahana Sunset, Mailepai, Maui, Hawaii* (scale: $^{1}/_{32}$" = 1'-0"), Sheet M-1 of 39 sheets by Michael T. Suzuki & Associates, and are to be considered approximate only.

Services performed by Weidig Geoanalysts conform to generally accepted practices of other consultants who undertake similar studies at the same time and in the same geographical area as does our firm. No other warranty is expressed or implied.

APPENDIX A

Field Exploration

APPENDIX A

Field Exploration

From December 6 through December 8, 2005, our field engineer conducted a reconnaissance of the site and surrounding vicinity. The location of the project is shown in relationship to surrounding landmarks and cultural features on Plate No. A1, Vicinity Map.

Our geotechnical exploration program was conducted under the supervision of our field engineer who logged, classified and recovered relatively undisturbed samples of the earth materials drawn from selected vertical intervals in each of nine test borings, and recorded the penetration resistance profiles generated by six probings. The approximate locations of the test borings and probings are depicted in relationship to the existing sea walls, the shoreline and adjacent condominium buildings on Plate No. A2, Site Plan.

The borings were advanced to a maximum depth of about nine feet and six were extended by probing to a maximum depth of about 22 feet below the ground or walkway surface behind the sea walls. Coring through a concrete walkway between one of the walls and Building "F" was required at three locations to facilitate exploration. At selected vertical intervals, relatively undisturbed samples of the earth materials were obtained by means of a 3.0-inch O.D. (2.5-inch I.D.) split-spoonsampler containing stacks of thin-walled, brass rings, each one inch deep. The sampler was advanced by hammer blows produced by a 140-pound hammer freely falling 30 inches, in accordance with ASTM Designation D 1586-84. The number of blows required to drive the sampler a total distance of 18 inches was recorded, and the sum of the hammer blows for the second and third six-inch increments, or blow count, was recorded for each drive. The samples were sealed in moisture-proof containers and transported in shock-resistant cases to our laboratory for further classification and testing.

The earth materials encountered by the borings were classified by color, texture, consistency, tactile moisture, and other relevant characteristics. The field classifications were recorded on the field boring logs, which were edited for final presentation. Ground water level observations were made during drilling and upon completion of the borings, which were backfilled with tamped soil and, where drilled through the walkway, concreted following exploration.

The probings were completed with a 4.0-inch-diameter, flush cone penetrometer driven with hammer blows produced by a 140-pound hammer freely falling 30 inches, in accordance with ASTM Designation D 1586-84. The number of blows required to drive the penetrometer a total distance of 12 inches was continuously recorded to the maximum depth explored.

The Logs of Borings are depicted on Plates No. A3 though A11. A key to the soils symbols and identification criteria used on the boring logs is presented on Plate No. A12, Unified Soil Classification System.

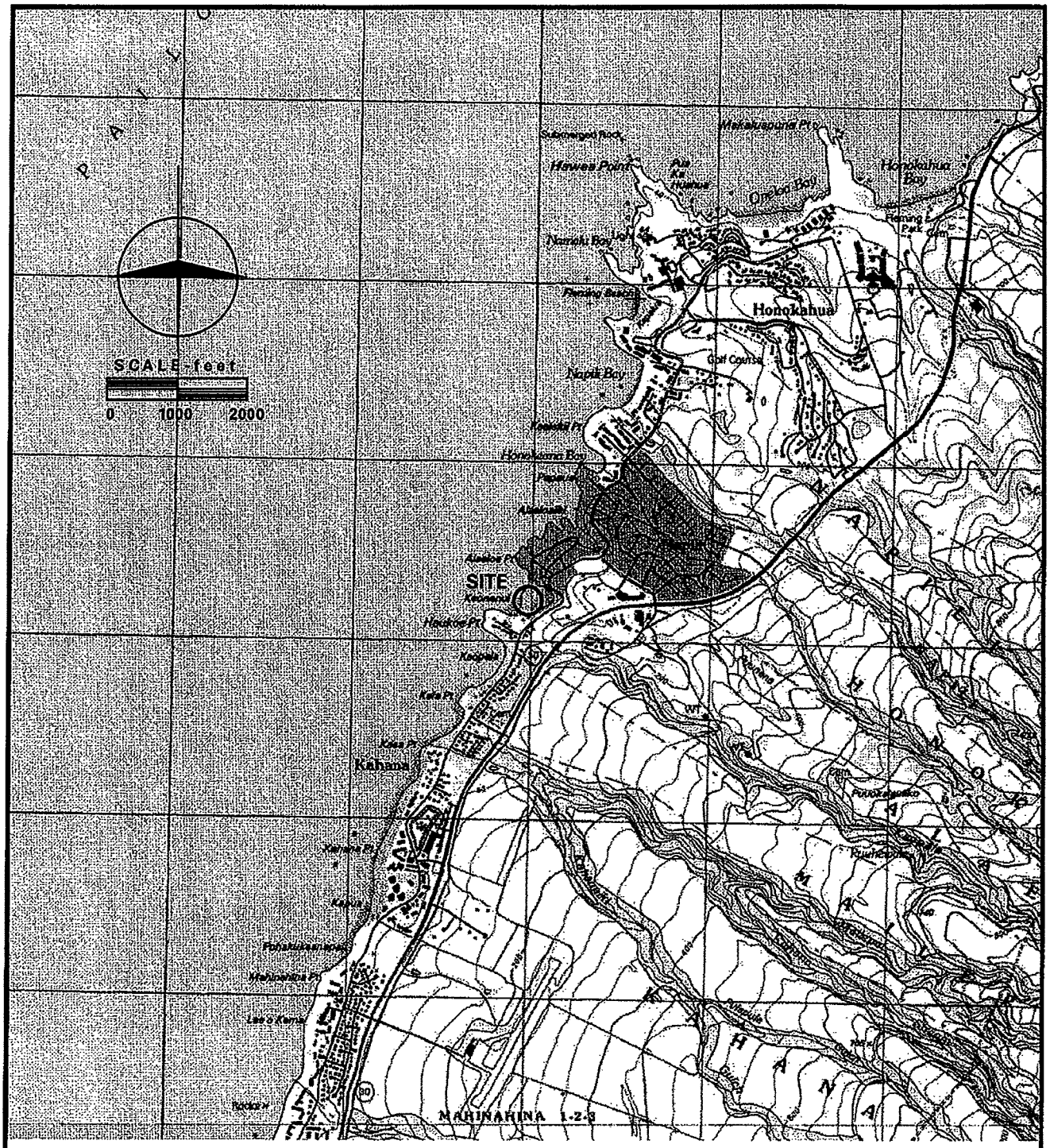

Base: United States Geological Survey, 1997, *Nāpili Quadrangle, Hawai'i - Honolulu Co., Island of O'ahu, 7.5 Minute Series (Topographic)*

VICINITY MAP

WEIDIG
Geoanalysts

KAHANA SUNSET CONDOMINIUM SEA WALLS
4909 Lower Honoapi'ilani Road
Kahana, Maui, Hawai'i

DATE: March, 2006

PROJECT NO. 05-0098.001

PLATE NO. A1

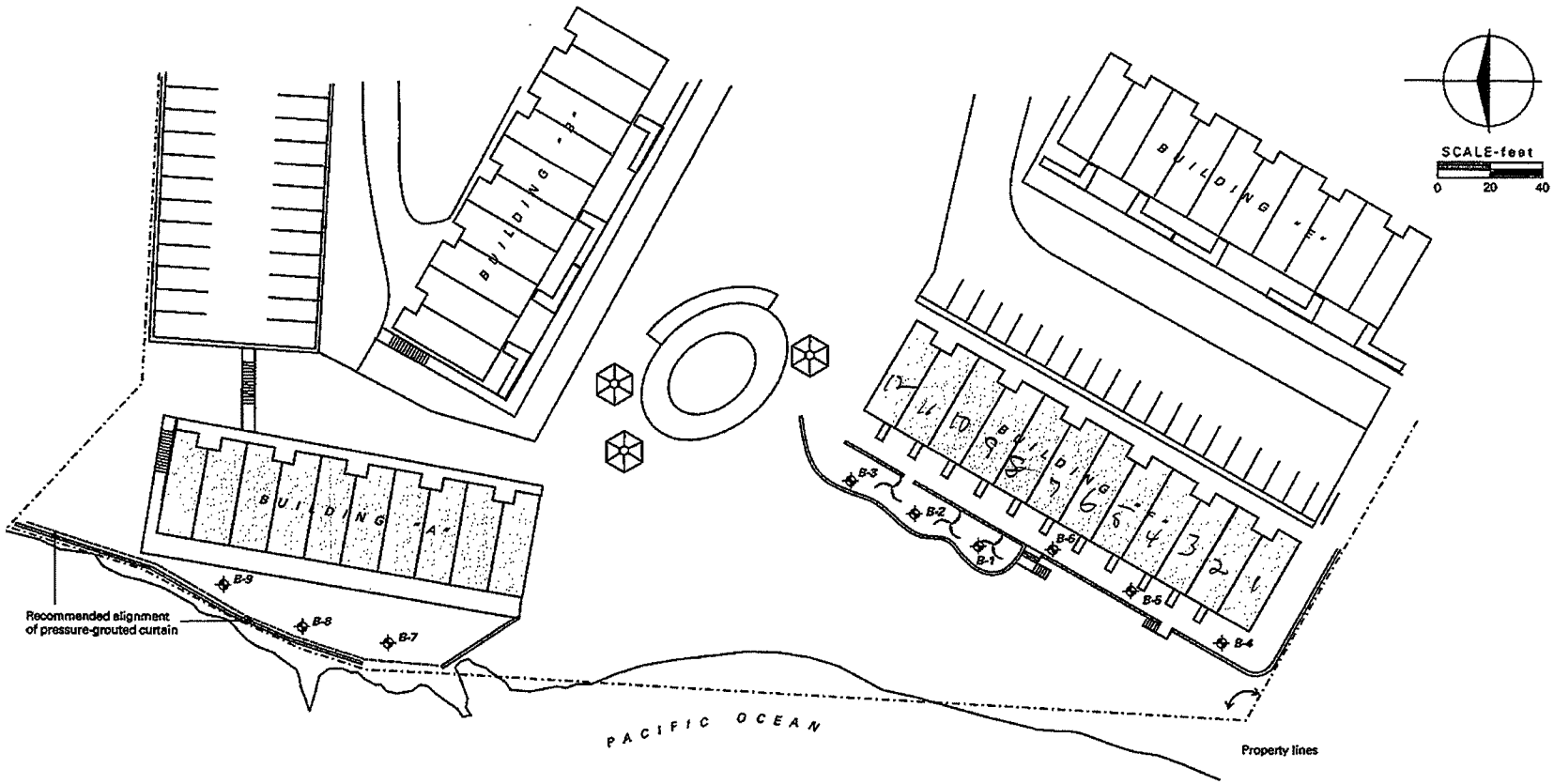

WEIDIG Geoanalysts

Base: Michael T. Suzuki & Associates, 1971, *Utility Plot Plan, 80 Unit Condominium Apts., Kahana Sunset, Mailepai, Maui, Hawaii* (scale: 1/32" = 1'-0"). Sheet M-1 of 39 sheets

SITE PLAN

KAHANA SUNSET CONDOMINIUM SEAWALLS
4909 Lower Honoapi'ilani Road
Kahana, Maui, Hawai'i

DATE: March, 2006

PROJECT NO. 05-0098.001

PLATE NO. A2

F-71 K

BORING LOCATION: See Site Plan	OPERATER: Weidig Geoanalysts	**BORING NO. B-1**
BORING ELEVATION:	LOGGED BY: Berwin Chow	
DATE DRILLED: December 6, 2005	TYPE RIG: Minuteman/4" flush cone penetrometer	

OTHER LAB TESTS	DRY UNIT WEIGHT (pcf)	MOISTURE CONTENT (%)	UNCONFINED STRENGTH (ksf)	PLASTICITY INDEX (%)	BLOW COUNT (Blows per foot)	SAMPLE TYPE AND NUMBER	DEPTH IN FEET	GRAPHIC SYMBOL	UNIFIED SOIL CLASSIFICATION	GEOTECHNICAL DESCRIPTION
SA	101	3.8			10	SB-1			SP	**SAND**, tan to buff, dry, loose, very fine to medium, poorly graded, coralline, slightly silty - Fill -
	102	13.4			18	SB-2	6			moist
	100	20.1			15	SB-3				
							10			
							15			
							20			
							25			

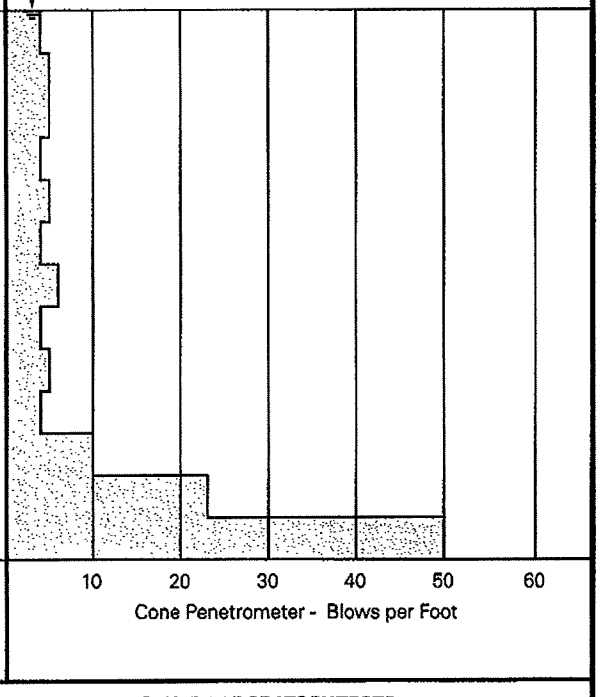

SAMPLE TYPE

BK - Bulk
CB - Core Barrel
DN - Denison Sampler
SB - Split Barrel
SP - Standard Penetration
ST - Shelby Tube

OTHER LABORATORY TESTS

AL - Atterberg Limits
CN - Consolidation
DS - Direct Shear Strength
PR - Proctor Compaction
SA - Sieve Analysis
TX - Triaxial Compression

LOG OF BORING

WEIDIG Geoanalysts

KAHANA SUNSET CONDOMINIUM SEA WALLS
4909 Lower Honoapi`ilani Road
Kahana, Maui, Hawai`i

DATE: March, 2006 | PROJECT NO. 05-0098.001

PLATE NO. A3

BORING LOCATION: See Site Plan	OPERATER: Weidig Geoanalysts	**BORING NO. B-5**
BORING ELEVATION:	LOGGED BY: Berwin Chow	
DATE DRILLED: December 7, 2005	TYPE RIG: Minuteman/4" flush cone penetrometer	

OTHER LAB TESTS	DRY UNIT WEIGHT (pcf)	MOISTURE CONTENT (%)	UNCONFINED STRENGTH (ksf)	PLASTICITY INDEX (%)	BLOW COUNT (Blows per foot)	SAMPLE TYPE AND NUMBER	DEPTH IN FEET	GRAPHIC SYMBOL	UNIFIED SOIL CLASSIFICATION	GEOTECHNICAL DESCRIPTION
	110	15.1			5	SB-1			SP	**SAND**, tan to buff, moist, loose, very fine to medium, poorly graded, coralline, slightly silty - Fill -
SA	106	4.8			27	SB-2	5			dry, semicompact
	90	22.3			22	SB-3				saturated
							10			
							15			
							20			
							25			

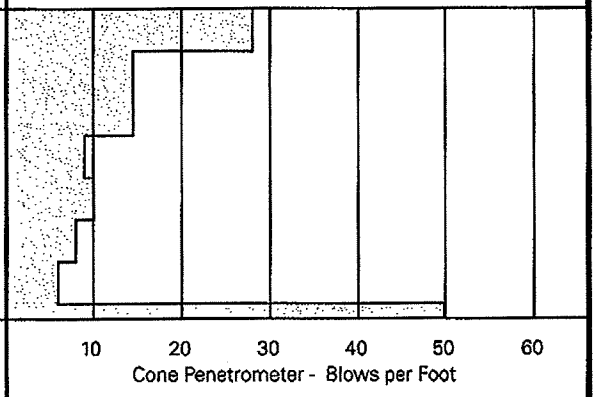

SAMPLE TYPE

BK - Bulk
CB - Core Barrel
DN - Denison Sampler
SB - Split Barrel
SP - Standard Penetration
ST - Shelby Tube

OTHER LABORATORY TESTS

AL - Atterberg Limits
CN - Consolidation
DS - Direct Shear Strength
PR - Proctor Compaction
SA - Sieve Analysis
TX - Triaxial Compression

LOG OF BORING

WEIDIG Geoanalysts

KAHANA SUNSET CONDOMINIUM SEA WALLS
4909 Lower Honoapi'ilani Road
Kahana, Maui, Hawai'i

DATE: March, 2006

PROJECT NO. 05-0098.001

PLATE NO. A7

fcb

BORING LOCATION: See Site Plan	OPERATER: Weidig Geoanalysts	**BORING NO. B-6**
BORING ELEVATION:	LOGGED BY: Berwin Chow	
DATE DRILLED: December 7, 2005	TYPE RIG: Minuteman/4" flush cone penetrometer	

OTHER LAB TESTS	DRY UNIT WEIGHT (pcf)	MOISTURE CONTENT (%)	UNCONFINED STRENGTH (ksf)	PLASTICITY INDEX (%)	BLOW COUNT (Blows per foot)	SAMPLE TYPE AND NUMBER	DEPTH IN FEET	GRAPHIC SYMBOL	UNIFIED SOIL CLASSIFICATION	GEOTECHNICAL DESCRIPTION
	110	26.9			8	SB-1			SP	**SAND**, tan to buff, moist, loose, very fine to medium, poorly graded, coralline, slightly silty - Fill -
	108	4.9			27	SB-2	5			dry, semicompact
	91	33.3			23	SB-3				saturated
							10			
							15			
							20			
							25			

10 20 30 40 50 60
Cone Penetrometer - Blows per Foot

SAMPLE TYPE

BK - Bulk
CB - Core Barrel
DN - Denison Sampler
SB - Split Barrel
SP - Standard Penetration
ST - Shelby Tube

OTHER LABORATORY TESTS

AL - Atterberg Limits
CN - Consolidation
DS - Direct Shear Strength
PR - Proctor Compaction
SA - Sieve Analysis
TX - Triaxial Compression

LOG OF BORING

WEIDIG Geoanalysts

KAHANA SUNSET CONDOMINIUM SEA WALLS
4909 Lower Honoapi`ilani Road
Kahana, Maui, Hawai`i

DATE: March, 2006 | PROJECT NO. 05-0098.001

PLATE NO. A8

A Bldg

BORING LOCATION: See Site Plan	OPERATER: Weidig Geoanalysts	**BORING NO. B-7**
BORING ELEVATION:	LOGGED BY: Berwin Chow	
DATE DRILLED: December 8, 2005	TYPE RIG: Minuteman	

OTHER LAB TESTS	DRY UNIT WEIGHT (pcf)	MOISTURE CONTENT (%)	UNCONFINED STRENGTH (ksf)	PLASTICITY INDEX (%)	BLOW COUNT (Blows per foot)	SAMPLE TYPE AND NUMBER	DEPTH IN FEET	GRAPHIC SYMBOL	UNIFIED SOIL CLASSIFICATION	GEOTECHNICAL DESCRIPTION
AL	95	24.6		30	19	SB-1			MH	**CLAYEY SILT**, gray-brown, moist, medium-stiff, with scattered fine to medium, subangular, weathered basaltic gravel
	93	24.3			119	SB-2	5			
										BASALT, gray-brown, highly weathered and fractured, moderately strong
	113	12.2			280	SB-3				
							10			Bottom of Boring No. B-7 @ 8.0 ft. No free ground water observed.
							15			
							20			
							25			

SAMPLE TYPE

BK - Bulk
CB - Core Barrel
DN - Denison Sampler
SB - Split Barrel
SP - Standard Penetration
ST - Shelby Tube

OTHER LABORATORY TESTS

AL - Atterberg Limits
CN - Consolidation
DS - Direct Shear Strength
PR - Proctor Compaction
SA - Sieve Analysis
TX - Triaxial Compression

LOG OF BORING

WEIDIG Geoanalysts

KAHANA SUNSET CONDOMINIUM SEA WALLS
4909 Lower Honoapi`ilani Road
Kahana, Maui, Hawai`i

DATE: March, 2006 | PROJECT NO. 05-0098.001

PLATE NO. A9

MAJOR DIVISIONS			SYMBOLS		TYPICAL DESCRIPTIONS
			ICON	CODE	
COARSE-GRAINED SOILS More than 50% of material is larger than the No. 200 Sieve	**GRAVEL AND GRAVELLY SOILS** Less than 50% of coarse fraction passes the No. 4 Sieve	**CLEAN GRAVELS** Less than 12% of fine fraction passes the No. 200 Sieve		**GW**	Well-graded gravels, gravel-sand mixtures, little or no fines
				GP	Poorly-graded gravels, gravel-sand mixtures, little or no fines
		SILTY OR CLAYEY GRAVELS At least 12% of fine fraction passes the No. 200 Sieve		**GM**	Silty gravels, gravel-sand-silt mixtures
				GC	Clayey gravels, gravel-sand-clay mixtures
	SAND AND SANDY SOILS At least 50% of coarse fraction passes the No. 4 Sieve	**CLEAN SANDS** Less than 12% of fine fraction passes the No. 200 Sieve	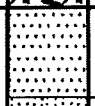	**SW**	Well-graded sands, gravelly sands, little or no fines
			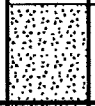	**SP**	Poorly-graded sands, gravelly sands, little or no fines
		SILTY OR CLAYEY SANDS At least 12% of fine fraction passes the No. 200 Sieve	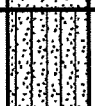	**SM**	Silty sands, sand-silt mixtures
			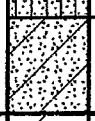	**SC**	Clayey sands, sand-clay mixtures
FINE-GRAINED SOILS More than 50% of material is smaller than the No. 200 Sieve	**SILTS AND CLAYS** Liquid Limit is less than 50	Plasticity index is above "A" Line		**CL**	Inorganic clays of low to medium plasticity, gravelly clays, sandy clays, silty clays, lean clays
		Plasticity index is below "A" Line		**ML**	Inorganic silts and very fine sands, rock flour, silty or clayey fine sands or slightly plastic clayey silts
			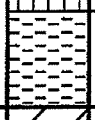	**OL**	Organic silts and organic silty clays of low plasticity
	SILTS AND CLAYS Liquid Limit is greater than 50	Plasticity index is above "A" Line		**CH**	Inorganic clays of high plasticity
		Plasticity index is below "A" Line		**MH**	Inorganic silts, micaceous or diatomaceous fine sands or silty soils
				OH	Organic clays of medium to high plasticity, organic silts
			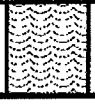	**Pt**	Peat, humus, marsh soils with high organic content

UNIFIED SOIL CLASSIFICATION SYSTEM

WEIDIG
Geoanalysts

KAHANA SUNSET CONDOMINIUM SEA WALLS
4909 Lower Honoapi`ilani Road
Kahana, Maui, Hawai`i

DATE: March, 2006

PROJECT NO. 05-0098.001

PLATE NO. A12

APPENDIX B

Laboratory Testing

APPENDIX B

Laboratory Testing

The laboratory testing program included natural moisture content, dry unit weight, plasticity, gradation and direct shear strength.

Natural moisture content tests(ASTM Designation D 2216-92) and dry unit weight tests (ASTM Designation D 2937-94) were conducted on selected samples of the earth materials recovered from each test boring. The results are posted on the Logs of Borings, opposite the depth appropriate to each sample.

Atterberg limits tests (ASTM Designation D 4318-84) were performed on a selected sample of the surficial soil near the sea cliff to evaluate its plasticity characteristics. The results are depicted on Plate No. B1, Atterberg Limits Test Data.

Gradation tests (ASTM Designation D 422-90) were completed on selected samples of the sea wall backfill to assess its particle size distribution. The results are illustrated on Plate No. B2, Mechanical Sieve Analysis Test Data.

Consolidated, drained direct shear tests (ASTM Designation D 3080-90) were conducted at normal pressures of 1,000, 2000 and 3,000 pounds per square foot on selected samples of the sea wall backfill to evaluate its internal strength characteristics. The results are summarized on Plate No. B3, Direct Shear Test Data.

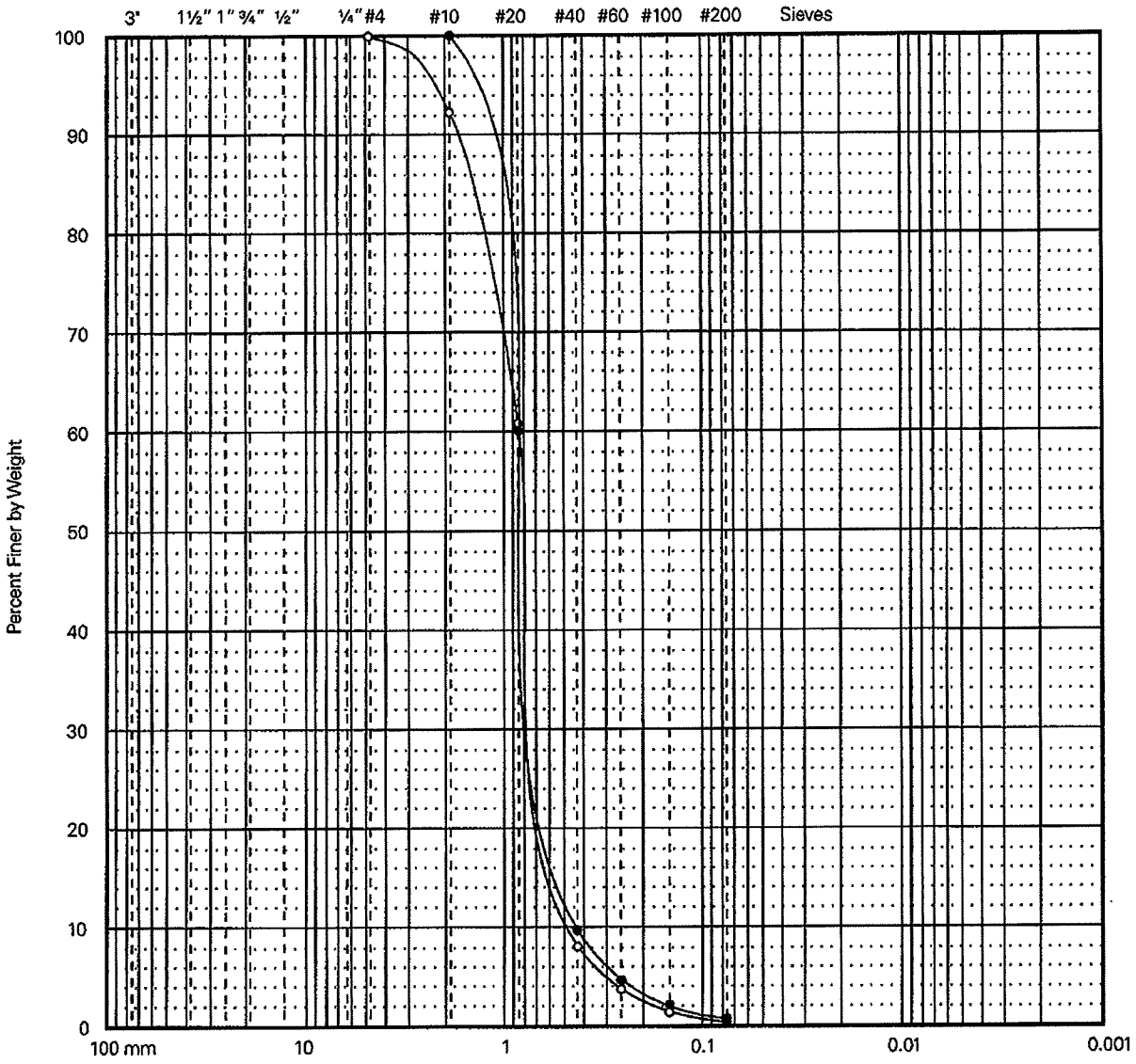

GRAVEL		SAND			SILT	CLAY
Coarse	Fine	Coarse	Medium	Fine		

Point Code	Boring No.	Sample No.	Depth (ft)	Dry Unit Weight (pcf)	Moisture Content (%)	Gravel (%)	Sand (%)	Silt / Clay (%)
●	B-1	SB-1	1.0	101	3.8	0.0	99.5	0.5
○	B-5	SB-2	4.0	106	4.8	0.0	99.7	0.3

MECHANICAL SIEVE ANALYSIS TEST DATA

WEIDIG
Geoanalysts

KAHANA SUNSET CONDOMINIUM SEA WALLS
4909 Lower Honoapi'ilani Road
Kahana, Maui, Hawai'i

DATE: March, 2006

PROJECT NO. 05-0098.001

PLATE NO. B2

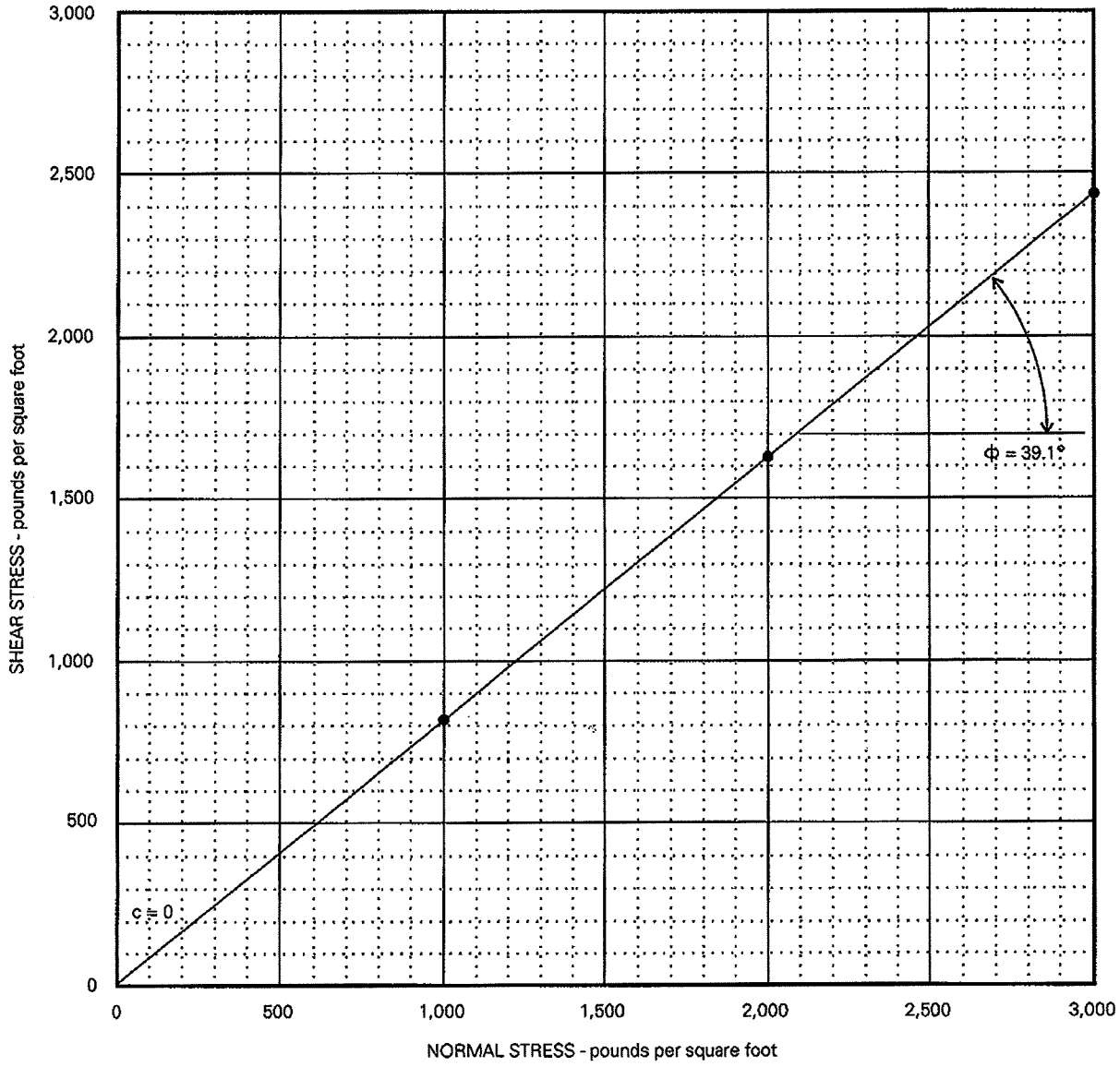

Boring No.	Sample No.	Depth (ft)	Dry Unit Weight (pcf)	Moisture Content (%)	Normal Stress (psf)	Shear Stress (psf)
B-3	SB-2	4.0	90	19.7	1,000	815
B-3	SB-2	4.0	85	19.9	2,000	1,625
B-3	SB-2	4.0	84	20.5	3,000	2,440

DIRECT SHEAR TEST DATA

WEIDIG
Geoanalysts

KAHANA SUNSET CONDOMINIUM SEA WALLS
4909 Lower Honoapi'ilani Road
Kahana, Maui, Hawai'i

DATE: March, 2006

PROJECT NO. 05-0098.001

PLATE NO. B3

APPENDIX C

References

APPENDIX C

References

1. Downing & Associates, 1978, *Plot Plan, Kahana Sunset Shoreline Wall* (scale: 1" = 10'), dated June 16, 1978.

2. Foote, D.; Hill, E. L.; Nakamura, S.; and Stephens, F., 1972, *Soil Survey of the Islands of Kaua'i, O'ahu, Maui, Moloka'i and Lāna'i, State of Hawai'i*, United States Department of Agriculture.

3. Island Geotechnical Engineering, Inc., 2000, *Shoreline Wall Evaluation, Kahana Sunset, Kahana, Maui, Hawaii, TMK:4-3-03:15*, dated June 22, 2000.

4. Island Geotechnical Engineering, Inc., 2001, *Report, Soils Investigation, Kahana Sunset Condominium Complex, Buildings A, B, C, D, E, Kahana, Maui, Hawaii, TMK:(2) 4-3-03:15*, dated July 8, 2001.

5. Island Geotechnical Engineering, Inc., 2002, *Shoreline Wall Evaluation #2, Kahana Sunset, Kahana, Maui, Hawaii, TMK:4-3-03:15*, dated October 28, 2002.

6. Marc M. Siah & Associates, Inc., 2003, *Seawall Reapir* [sic] *Sketches for Kahana Sunset Property*, Sketches SK-1 through SK-4, dated January 9, 2003.

7. Marc M. Siah & Associates, Inc., 2003, *Kahana Sunset Property Wall Repair*, Sketch SK-2, dated April 1, 2003.

8. Marc M. Siah & Associates, Inc., 2003, *Damaged Sea Walls at Sunset Kahana Property*, dated November 26, 2003.

9. Marc M. Siah & Associates, Inc., 2003, *Seawall Reapir* [sic] *Sketches for Sunset Kahana Property*, Sketches SK-5 and SK-6, dated December 1, 2003.

10. Marc M. Siah & Associates, Inc., 2003, *Seawall Reapir* [sic] *Sketches for Sunset Kahana Property*, Sketch No. SK-7, dated December 4, 2003.

11. Marc M. Siah & Associates, Inc., 2003, *Seawall Repair Sketches for Kahana Sunset Property*, Sketches SK-7 (revised?) and SK-8, dated December 5, 2003.

12. Marc M. Siah & Associates, Inc., 2003, *Kahana Sunset Property - Backfill & Repair*, Sketches SK-1 and SK-2, dated May 3, 2004.

13. State of Hawai'i, Department of Taxation, 1996, *Taxation Maps Bureau, Tax Map Key 4-3-03:15* (scale: 1" = 60').

References
(Continued)

14. Stearns, H.T., and Macdonald, G.A., 1942, *General Geology and Ground-Water Resources of the Island of Maui, Hawaii*, Hawaii (Territory), Division of Hydrography, United States Geological Survey Bulletin 7.

15. Michael T. Suzuki & Associates, 1971, *Utility Plot Plan, 80 Unit Condominium Apts., Kahana Sunset, Mailepai, Maui, Hawaii* (scale: $^{1}/_{32}$" = 1'-0"), Sheet M-1 of 39 sheets.

16. United States Geological Survey, 1997, *Nāpili Quadrangle, Hawai'i - Maui Co., Island of Maui, 7.5-Minute Series (Topographic)* (scale: 1:24,000).

APPENDIX H
Cultural Impact Assessment

Kahana Sunset Condominium

Cultural Impact Assessment

For

Kahana Sunset Condominium
4909 Lower Honoapi‘ilani Highway
‘Alaeloa, Maui, Hawai‘i 96761
TMK (2) 4-3-003:015

by

Jill Engledow
Historical Consultant
Wailuku, Maui

March 2012

Prepared for
Kahana Sunset AOAO

Kahana Sunset Condominium Cultural Impact Assessment Table of Contents

Figures…….....3

Introduction……...10

Report Methodology/Resource Materials Reviewed……10

Study Area Description…….11

Study Area History……....11

Oral Interviews……..16

Confidential Information Withheld/Conflicts in Information or Data…...21

Conclusion…….…....21

References……..…….....22

Appendices…….…….....24

FIGURES

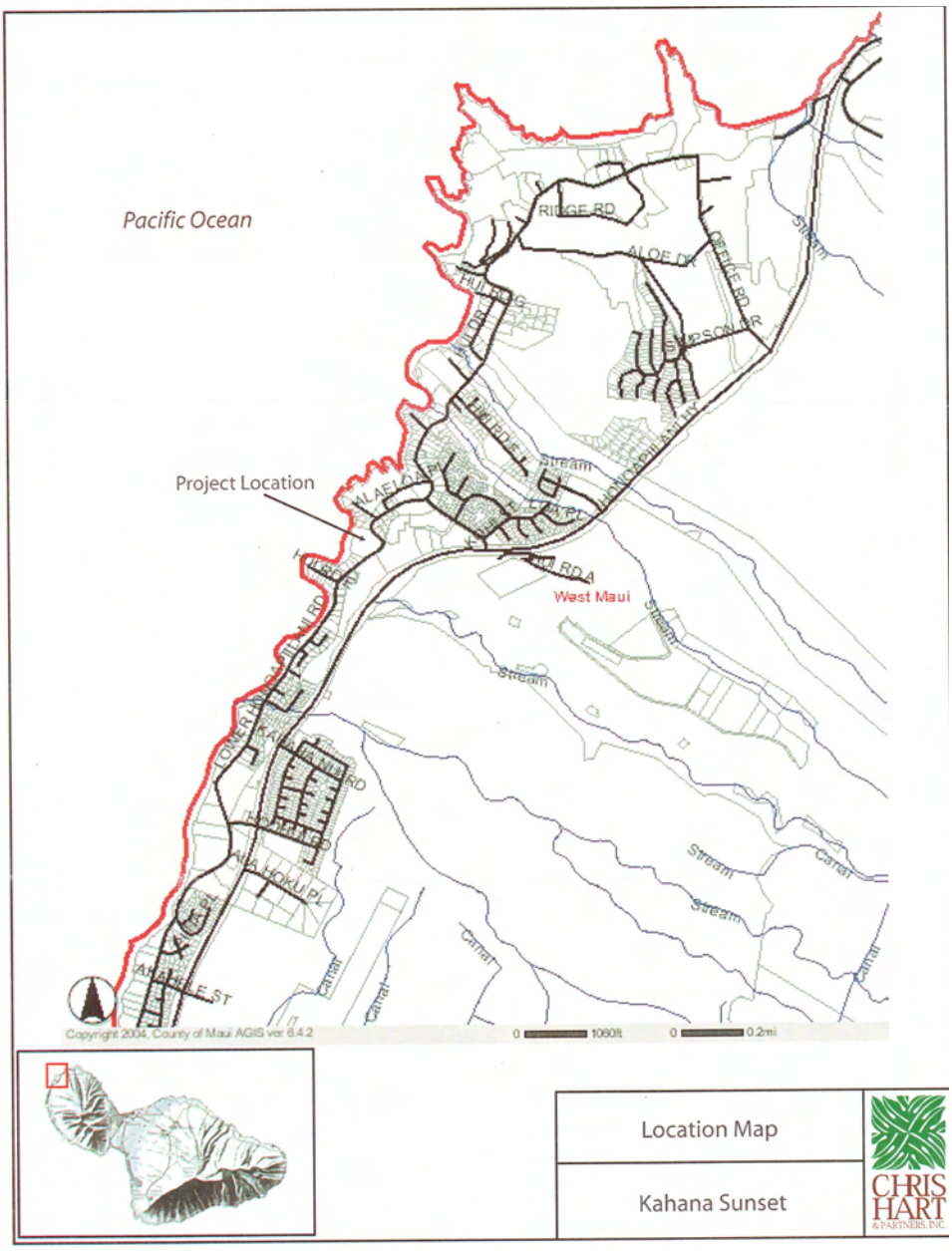

Fig. 1. Kahana Sunset Location Map

Fig. 2. Kahana Sunset condominium. This photo was taken by Engledow in April 2009. The area now in need of repair is the stone seawall at the right of the photo, topped with a white fence.

Figure 3. The wall seen in the photo above is shown with the recent damage caused by sinkholes in this February 2012 photo by Engledow. Signs, fencing and plywood covering sinkholes keep people out of the area.

Fig. 4. Fishers on Haukoe Point, across the bay from the subject property. Engledow photo 4/09

Fig. 5. West Maui *ahupuaʻa* map, on display at Kapalua Resort's Kukui Room.

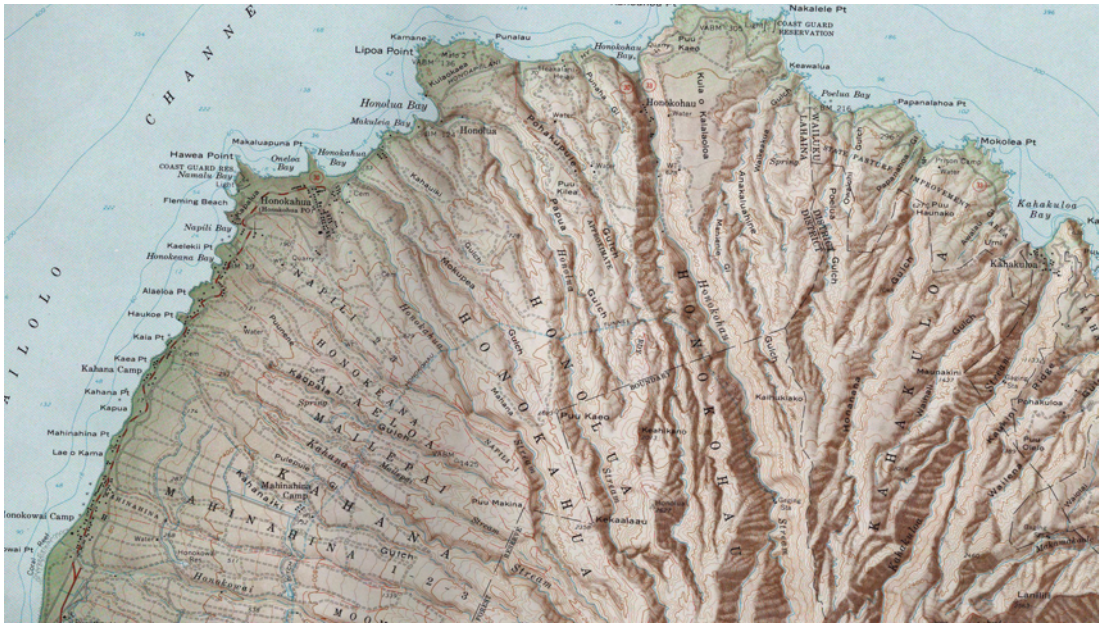

Fig. 6. Portion of U.S. Geological Survey map showing Ka‘anapali District.

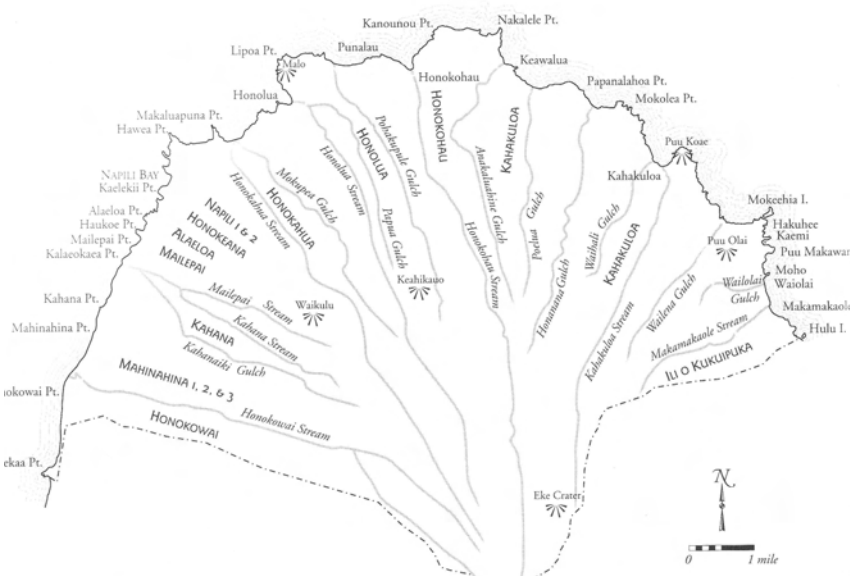

Fig. 7. West Maui *ahupua‘a* and water courses. From *Sites of Maui* by Elspeth Sterling.

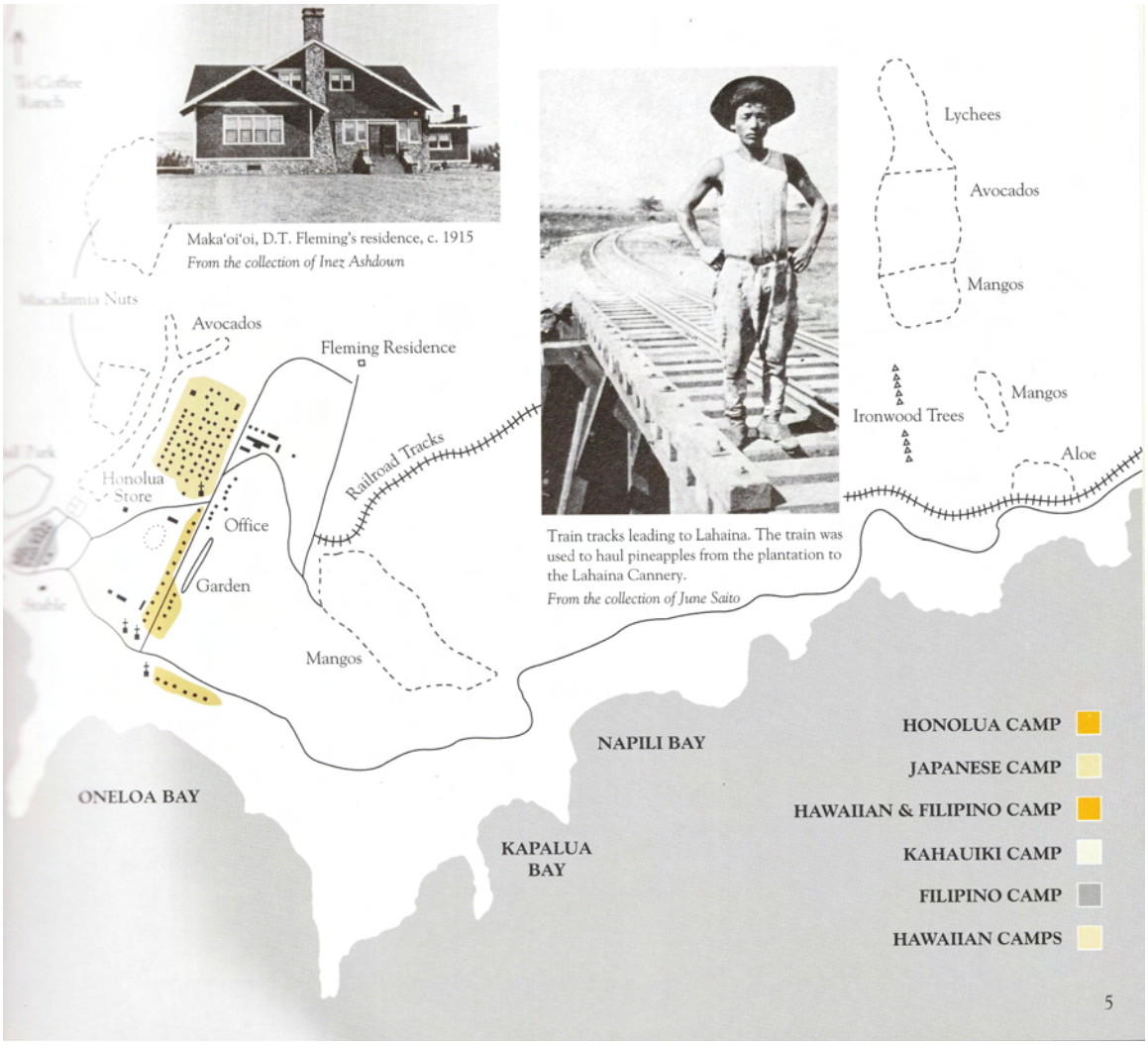

Figure 8. Subject parcel is on the bay makai of the "Aloe" field marked on the map found on page 5 of *Plantation Days: Remembering Honolua.*

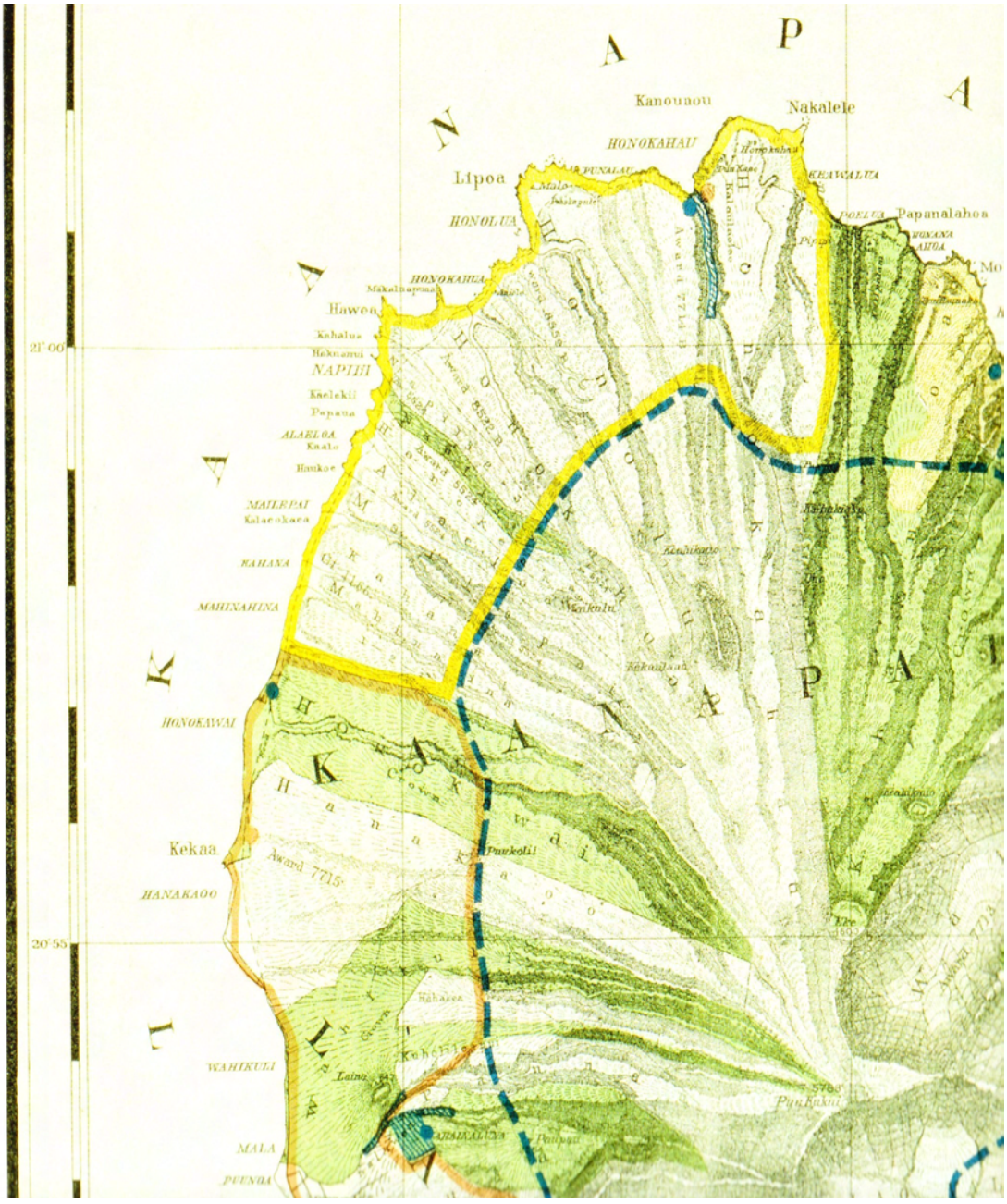

Fig. 9. Hawaiian Government Survey Map, 1885/1903. Yellow outline indicates grazing land.

Figure 10. Detail of Hawaiian Government Survey Map, 1885/1903, showing LCA 5524 in ‘Alaeloa. LCA

Kahana Sunset

Cultural Impact Assessment

I. Introduction

At the request of Chris Hart & Partners, Inc., researcher and writer Jill Engledow prepared this Cultural Impact Assessment of the Kahana Sunset Condominium, located at TMK: (2) 4-3-003:015, Lahaina, Maui, Hawaii, in the *ahupua'a* of 'Alaeloa. The proposed action that requires this Cultural Impact Assessment is an application for a Chapter 343 Environmental Assessment, a Special Management Area Use Permit, and a Shoreline Setback Variance to allow major repairs to an existing seawall. The condominium is located on a 4.46 acre site at 4909 Lower Honoapi'ilani Highway, Lahaina, Maui, HI 96761. See project location in Figure 1.

II. Report Methodology/Resource Materials Reviewed

Sources sited in archival research are listed in the attached bibliography. Additional searches included the Internet and the indexes of a variety of books on Hawaiian culture and history which were searched for the words 'Alaeloa, Mailepai and Nāpili. A number of commonly used texts about Hawaiian history included no specific references to 'Alaeloa and very few to the surrounding area. Among the works consulted for these terms without success were:

- *The People of Old, The Works of The People of Old, Tales and Traditions of the People of Old* (all by Samuel M. Kamakau)
- *Nānā I Ke Kumu, Volumes 1* and *II* (Mary Kawena Pukui, E.W. Haertig, and Catherine A. Lee)
- *Hawaiian Antiquities* (David Malo)
- *Ke Alaloa O Maui* (Inez Ashdown)
- *Faith in Paradise* (Maggie Bunson)
- *Sugar Trains Pictorial* (Jesse C. Conde)
- *Sugar Water* (Carol Wilcox)
- *The Index to The Maui News* (Gail Bartholomew)
- *Hawaiian Almanac and Annual, 1875-1878* (Thomas G. Thrum)
- www.ulukau.org, which includes digital copies of old Hawaiian-language newspapers

- The Windley Files of the Lahaina Restoration Foundation
- The archives of Maui Historical Society

Engledow also conducted interviews with residents who remember uses in the area over the past 50 years.

III. Study Area Description

This site is on a small bay between ʻAlaeloa and Haukoe Points. The coastline in this area is highly developed. Much of Lower Honoapiʻilani Highway is lined with walls and gates that limit public access to the shoreline. Except for ladders and steps leading down from various residential parcels, the bay's small beach is accessible to pedestrians only through the Kahana Sunset property, but a beach-access path on Hui Road E leads to Haukoe Point at the south end of the bay. This rocky point provides a platform for fishing, but is too steep to provide access to the sandy beach below. (Figure 3) The white sand beach fronting the Kahana Sunset has been called Keonenui, "the big sand," and later Yabui Beach (Young 1980:63) An 1885 Hawaiian Government Survey Map shows the place name "Kaalo" just south of the *ahupuaʻa* name "Alaeloa," but it is not clear what "Kaalo" refers to, and it is not listed in *Place Names of Hawaiʻi.*

While informants Alan Yabui and Glenn Kamaka recall an intermittent stream that ran during Kona storms, a 1913 USGS drainage map reprinted in *Sugar Water* (Figure 7) shows no permanent waterway in this *ahupuaʻa.* Honokōhau Ditch (also known as Honolua Ditch) was completed in 1904 and rebuilt in 1913, but apparently did not tap any sources in the ʻAlaeloa mauka area. The ditch, constructed by Honolua Ranch, supplied water to Pioneer Mill. (Rice 1996:126-130)

IV. Study Area History

The subject property is located within the *ahupuaʻa* of ʻAlaeloa in the district once known as Kāʻanapali, but now known as Lahaina. In the Civil Code of 1859, "the twelve ancient districts of the island of Maui were reduced to four by combining Kaanapali with Lahaina. . ." (King, quoted in Sterling 1998:3). Prior to this time, the district of Lahaina extended to Kekaʻa, in the area that now is the Kāʻanapali Resort. The district of Kāʻanapali extended from Kekaʻa around the north coast of West Maui, past Kahakuloa, to near Hulu Island. (Figure 6)

Two Hawaiian proverbs apply to this area of the Kāʻanapali district. *Kāʻanapali wāwae ʻulaʻula* (red-footed Kāʻanapali) is "a term of derision for the people of Kāʻanapali. The

soil there is red, and so the people are said to be recognizable by the red soles of their feet." A second seems to indicate that this was a productive area: *Ka ua leina hua o Kā'anapali* (the rain of Kā'anapali that leaps and produces fruit). (Pukui, *'Ōlelo No'eau* 1983:1280, 1581)

This area includes the famous Honoapi'ilani--the bays of Pi'ilani, including the major bays of Honokōwai, Honokeana, Honokahua, Honolua and Honokōhau. 'Alaeloa is just south of Honokeana. This name for the bays refers to the chief Pi'ilani, who controlled all of Maui Nui in the 15th century. While Pi'ilani is remembered for the peace and prosperity he brought to his kingdom, his sons, Lono-a-Pi'ilani and Kiha-a-Pi'ilani, fought each other, and succeeding generations fought battles in this West Maui neighborhood, some of which are described below.

Rich with fish, fed by streams that watered *lo'i kalo* in their valleys, the bays drew admiring attention in the song *Moloka'i Nui A Hina.* This song about Moloka'i, whose people view West Maui from across the channel, begins with the line *Ua nani nā hono a Pi'ilani:* How beautiful are the bays of Pi'ilani. These lovely bays are a symbol of Maui in other songs as well, such as *Maui Nani* by Johanna Koana Wilcox and *Lei Lokelani* by Charles E. King. Although the small coves of 'Alaeloa are not listed among the famous bays, they are certainly junior members of the family, tucked between Honokōwai and Honokeana.

The name 'Alaeloa translates as "distant mudhen," according to Pukui, but some contemporary informants related the word "*'alae"* to the area's red dirt. According to the *Hawaiian Dictionary, 'alaea* is "the water-soluble collodial ocherous earth used for coloring salt, for medicine, for dye and formerly in the purification ceremony called *hi'uwai."* (Pukui and Elbert 1974:16) Silla Kaina, cultural resources coordinator for Kapalua Land Company, grew up in Honolua, and remembers her grandmother (from Hāna) collecting red dirt from 'Alaeloa cliffs which she boiled to make an iron-rich tea. Ms. Kaina says the dirt from this *ahupua'a* is redder than that in other *ahupua'a.*

W.M. Walker, in his notes on *Archaeology of Maui*, describes a *heiau* "on bluff at south side of rocky cove between 'Alaeloa and Papaua Points." He says this simple structure is a "small rectangular enclosure measuring 50 x 66 ft. . . . Use unknown. Several people thought it was a cattle pen." (Walker, Maui Historical Society.)

Handy, in *Hawaiian Planter*, says that:

> On the south side of western Maui the flat coastal plain all the way from Kihei and

> Maalaea to Honokahua, in old Hawaiian times, must have supported many fishing settlements and isolated fishermen's houses, where sweet potatoes were grown in a sandy soil or red *lepo* near the shore. For fishing, this coast is the most favorable on Maui, and although a considerable amount of taro was grown, I think it reasonable to suppose that the large fishing population which presumably inhabited this leeward coast ate more sweet potatoes than taro with their fish. (Handy, quoted in Sterling 1998:17)

A 1985 archaeological study agrees with this opinion, finding few signs of irrigated *loʻi kalo* in the area near the subject parcel. The study, titled "Testing of Cultural Remains Associated with the Kahana Desilting Basin," says:

> An examination of the L.C.A. documents for the various *ahupuaʻa* of the general area, and field inspection of the gulch area immediately *mauka* of the project area strongly suggest that irrigation systems were not in use at Kahana. . . indeed for the three *ahupuaʻa* north of here, only two L.C.A. parcels with *loʻi* were recorded, and both were very small, presumably springfed, systems several miles inland . . . thus the Kahana settlement pattern in A.D. 1848 consisted of houselots, and at least one small fishpond, extending several miles inland along the banks of Kahana Stream. No houselots were claimed beyond a few hundred feet inland. This pattern also appears to hold for at least the next three *ahupuaʻa* to the north of Kahana--Mailepai, ʻAlaeloa and Honokeana. (Walker and Rosendahl 1985:A-3)

However sparsely populated, the area around the subject parcel played its part in the great battles of the 1700s. Here is Sterling's summary of battles at Lahaina and Kāʻanapali, taken from Fornander's *Account of the Polynesian Race:*

> [*Alapainui, on his return from Oahu, hears of the uprising of Kauhiaimokuakama against his brother Kamehamehanui. Kamehamehanui is defeated in Lahaina and flees with Alapainui to Hawaii.]*
>
> In the following year, say 1738, Alapainui returned to Maui with a large fleet, well-equipped, accompanied by Kamehamehanui. With headquarters at Lahaina, his forces extended from Ukumehame to Honokowai. . .
>
> [Kauhi sends to Peleioholani, moi of Oahu, for help] . . . which that restless and warlike prince accepted, and landing his fleet at Kekaha, encamped his soldiers about Honolua and Honokahua.

> It is said that Alapai proceeded with great severity against the adherents of Kauhi in Lahaina, destroying their taro patches and breaking down the watercourses out of the Kauaula, Kanaha, and Mahoma *[Kahoma]* valleys.
>
> [Alapai reaches Lahaina before Peleioholani can get there from Oahu, and Kauhi retreats to the uplands and ravines behind Lahaina. Peleioholani lands and attacks Alapainui's forces in the hopes that he can form a junction with Kauhi's forces.]
>
> To this effect Peleioholani advanced to Honokowai where he found a detachment of Alapai's army, which he overthrew and drove back with great loss to Keawawa. Here they rallied upon the main body of the Hawaii troops. The next morning Alapai had moved up his whole force, and a grand battle was fought between the Oahu and Hawaii armies. The fortune of the battle swayed back-and-forth from Honokowai to near into Lahaina . . . (Fornander, quoted in Sterling 1998:19)

Kamakau also describes this battle in *Ruling Chiefs.* He says that Alapa‘i, in addition to drying up the streams in the Lahaina area, also “kept close watch over the brooks of Olowalu, Ukumehame, Wailuku and Honokowai.” The hardest fighting, he says, “even compared with that at Napili and at Honokahua in Ka‘anapali,” took place at Pu‘unēnē. (Kamakau 1961:74) It seems likely that, rather than the better-known Pu‘unēnē on the Central Maui isthmus, this refers to Pu‘unēnē *mauka* of ‘Alaeloa, which can be seen on a U.S. Geological Survey map (Figure 6).

More than a century later, when Western contact had greatly changed Hawaiian society, ‘Alaeloa as well as other ‘*āina* across the islands began a transition that eventually led to the resort/residential neighborhood it is today.

The subject property is part of Land Commission Award 4807. The Māhele Database available through the website Waihona ‘Āina records a claimant named Nika receiving five *apana* under this claim number. These included 30 *kalo lo‘i*, perhaps in an *apana* higher up the hill than the beach-side subject parcel.

In support of the claim by Nika, Kaaukea swore that Nika had received three “*kula uala,*” or sweet potato fields, a houselot and *kalo* land from his ancestors in the time of Kamehameha I and from “Kekanai at the time of Hoapili in 1837, no objections.” (The parcels were in ‘Alaeloanui and ‘Alaeloaiki. Maps available to this report writer do not show these specific areas.) (Appendix 1)

Notes from land records collected into two journals by Honolua Ranch in the early 1900s mention Nika and several parcels that ended up belonging to the ranch. According to historical writer Katherine Kama‘ema‘e Smith (who was in the process of entering the journals into the public domain under a grant from the Honua Kai West Maui Benefit Foundation), the Alexander Journal “has *apana* 3 and 4 of Nika's LCA located in

‘Alaeloaiki. *Apana* 3 is a 1/4 acre houselot (*pahale*) surrounded by *konohiki* land, and written in pencil next to the survey drawing are two names: May Reciao and Annie P. Chung. *Apana* 4 is 1 and 3/10 acres in Mailepai that was sweet potato land (*kula 'uala*) again surrounded by *konohiki* land. The name in pencil is Ahsing.” (Smith email communication 2/10/12 based on Alexander Journal)

In a second journal, kept by D. T. Fleming, Smith found notes indicating that Kahopukahi, son of Nika, deeded his portion of Nika land in Kahana to Lincoln M. Baldwin Oct. 8, 1889, who deeded these holdings to H. P. Baldwin Jan. 1, 1891. In Mailepai, lands identified as “purchased from Nika” also ended up in the hands of H.P. Baldwin. So, like most of the land along this coast, the Nika parcels became part of the Honolua Ranch. (Smith email communication 2/10/12 based on Fleming Journal)

LCA 4807 apparently was one of a few smaller parcels surrounded by the much larger lands controlled by Laura Kanaholo Konia (c. 1807-1857)--perhaps the “*konohiki* lands” mentioned in the Alexander Journal. Laura Konia held 22 *‘āina* prior to the Māhele, almost all on Maui in the Kā‘anapali district. She relinquished half to the king and was left with eleven, of which eight were on Maui. ‘Alaeloa was among them. With neighboring lands of Mahinahina, Nāpili, Mailepai and a portion of Honokeana, it became part of Land Commission Award 5524 and later Royal Patent 1663. (Kame‘eleihiwa 1992:228, 246)

When Laura Konia died in 1857, her daughter Bernice Pauahi inherited this land. Documents on file in the state Bureau of Conveyances show that, in June 1860, Bernice Pauahi and Charles Bishop deeded this land to a number of individuals. This was the *Hui ‘Āina o Mailepai,* an early example of a system Native Hawaiians established in order to maintain their traditional lifestyle, with residents of an *ahupua‘a* having access to the resources of a much larger area than the small homestead of a *kuleana* lot. (Stauffer 2004:2) The Mailepai Hui had 106 owners (Watson, *Honolulu Star-Bulletin* 12/14/1932)/

Though detailed, comprehensive population figures are not available for Hawai‘i in the 1800s, some figures survived for Honokowai. While these may not have included ‘Alaeloa, they do give a glimpse of the population and lifestyle of the area. The mission census of 1832 found 490 individuals living in Honokowai. (Schmitt 1973:38) An 1878 Kingdom of Hawai‘i census of Honokowai also survives. A total of 242 individuals lived in 32 *hale* visited by the enumerator, all but a couple listed as “native.” Most were engaged in agriculture, either on their own *kuleana* or as plantation workers. (Kingdom census, Kahului Library)

The Mailepai Hui lands and much of this West Maui coastline were acquired in the late 1800s and early 1900s by Henry P. Baldwin and his companies, Honolua Ranch and later

Baldwin Packers, the petitioner in the 1931 Mailepai Hui partition which ended the hui and parceled out pieces to various owners, primarily Baldwin Packers. Henry Perrine Baldwin acquired most of the company's land (when it was known as Honolua Ranch) by the end of the 19th century through a series of land grants and purchases. (Cameron et. al 1987:7) Originally used for grazing, the ranch gradually switched over to planting various crops in the early 20th century. (Figure 8) A map in the book *Plantation Days* shows plantings of aloe vera, mangoes, avocados and lychees *mauka* of the subject property, across the road that would become Lower Honoapi'ilani Highway and railroad tracks that transported pineapple to the company's Lahaina cannery in the early 1900s. (Figure 9)(Cameron et al. 1987:5)

Pineapple was planted by manager David T. Fleming, hired by Baldwin in 1911 to oversee Honolua Ranch. Fleming, who experimented with many crops in addition to pineapple, also owned assorted parcels of land along this coast, including some in the neighborhood of the subject parcel. His granddaughter, Ginger Gannon, said he had a beach house at 'Alaeloa. In 1932, Fleming planted 10 acres of aloe (apparently the field depicted in Figure 9), which he attempted to develop as a marketable product. Over the years, the ranch (renamed Baldwin Packers in 1924) gradually replaced its grazing land with pineapple plantings, which totaled 3,500 acres when *Plantation Days* was written in 1987. Baldwin Packers merged with Maui Pineapple Company in 1962, and the Honolua area which was its headquarters became the Kapalua Resort, while the land south of Honolua, including the Mailepai Hui land and the subject parcel and its neighbors, was developed as a residential and resort neighborhood.

V. Oral Interviews

Methodology, Procedures, and Interviewee Biographical/Organizational Information

A legal ad in *The Maui News* requested information from anyone with knowledge of cultural practices around this parcel; no replies were received. (Appendix 2) One individual with roots in the general area was contacted for information about current cultural uses and possible impact of the proposed action. A summary of his interview is below. In earlier cultural impact assessments of parcels on this bay, Engledow interviewed several individuals, two of whom actually lived in 'Alaeloa. Others lived in the general area and were able to talk about the lifestyle of this part of West Maui a generation ago. The information obtained from these informants most likely applies to the Kahana Sunset parcel and surrounding area. Because native informants of this area are few and far between, relevant excerpts of these interviews are being repeated in this report and are summarized below.

Glenn Kamaka, age 62, was interviewed by telephone March 2 and March 6, 2012. Mr. Kamaka was born in 1950 in Honokahua and grew up there. As a child, he said, "We used to ride bikes from Honokahua to Kahana," a route that took the riders past the subject parcel when it was owned by the Yabui family. "Back then, the water always had the right-of-way to go through property," he said, and at this location, water flowed through a culvert under the road and down the slope to the ocean. Perhaps this water flow, also mentioned by former resident Alan Yabui, was the ʻAlaeloaiki Stream mentioned in Māhele documents but not shown on available maps. Mr. Kamaka remembers that the culvert that used to direct this water through the area that is now being undermined and is in need of repair.

In the initial conversation March 2, Mr. Kamaka speculated that the current problems are being caused by that runoff, but after a site inspection, he said March 6 that possibly the problem is coming from the resort's system to collect rainwater off of its building roofs. Mr. Kamaka works as assistant chief of the engineering department at the Napili Kai Beach Resort and said he has seen a similar situation at that resort. Usually, the rain there goes out through an open channel, but when there is heavy surf, the channel becomes blocked by sand. Possibly problems such as overflow in whatever system Kahana Sunset uses to deal with resort runoff are the source of its problem, he speculated. Perhaps the resort needs another storage area to hold runoff water.

Whatever the cause of the problem, Mr. Kamaka's primary concern about impact from repairs is any possible effect on the fish population in the bay fronting Kahana Sunset. "I come from a fishing family that has fished this area our whole lives," Mr. Kamaka said. The sandy beach in front of the resort was a staging area for *hukilau*, and many fish such as *akule* and *papio* could be found in the bay. It is a breeding site for *moi*, important both because it is a wonderful fish for eating and because of the status it holds in the Hawaiian culture, formerly being reserved only for *aliʻi*. Mr. Kamaka said the fish along this coast have been depleted, and a lot of the coastline is fished out since the days of his youth. Whatever is done to solve the problem at Kahana Sunset must be done in such a way as to protect the well-being of the ocean and its fish population, he said.

Alan Yabui, interviewed April 13, 2009, by telephone, spent some of his childhood living at the site of the present Kahana Sunset. This interview was originally conducted for a Cultural Impact Assessment on a neighboring property. Mr. Yabui reviewed and offered some additions to an e-mailed summary of the phone conversation, and his additions are included in the summary below. Mr. Yabui is now a resident of Bothell, Washington, where he teaches classes in Hawaiian history, inter-cultural communication and history of the Japanese internment camps. He and his wife visit Maui often.

Mr. Yabui's grandfather, Yoshimatsu Yabui, was the Lahaina Cannery supervisor, and his son Yoshihara Yabui (Alan's father) also worked as a cannery supervisor. Yoshimatsu Yabui was a good friend of D. T. Fleming, who often visited the Yabui family home to relax with his friend under a *hau* tree. Because this home was on the site of the current Kahana Sunset, Keonenui Beach is often called Yabui Beach. Mr. Fleming also gave his friend a piece of land (less than an acre) in exchange for Mr. Yabui allowing Baldwin Packers to remove some sand from the dunes on his property in order to make a concrete floor for an expansion at the Lahaina Cannery in the space now occupied by the ABC Store and the *mauka* space with several stores, a restaurant, and Starbucks.

Mr. Yabui said his grandfather brought this property in 1939 from a Chinese merchant in Lahaina who had decided to go back to China. Mr. Yabui said he remembers that the name began with the letter "C." Mr. Yabui thinks there must have been a Hawaiian village there at one time--rocks that his grandfather dug up, now used in the walls around the Kahana Sunset, were weathered when his grandfather found them, so they might have come from that village. Some of the rocks were dark-blue basalt, adze-quality stone. His grandfather planted ti plants and mango trees that are still growing on the Kahana Sunset property. His grandfather also had poi pounders and *ʻulu maika* stones, but Mr. Yabui is not sure whether his grandfather found these artifacts or whether David Fleming gave them to him.

The tsunami of April 1, 1946, turned upside down a neighbor's home near Yoshimatsu Yabui's family home on the Lahaina shoreline (now the parking lot near the entrance to Old Lahaina Lūʻau), so Mr. Yabui's grandfather bought the house structure and moved it to ʻAlaeloa and fixed it up over the next four years.

Alan's mother contracted TB in 1943, was sent to Kula Sanatorium (before penicillin, to recover) and he was raised by his grandparents and lived with them after the April 1, 1946, tidal wave in a house in "Cannery Camp," now the location of the Old Lahaina Lūʻau. Later, after 1946, his grandparents moved to another house in "Cannery Camp," which is now the site of the main performance stage at Old Lahaina Lūʻau. His grandfather retired in 1950 and at age 10 Alan moved to the site that is now Kahana Sunset. He lived there until he left for college at age 18.

One well-known neighbor was Maui hula teacher Emma Sharpe and her husband, David. [Mrs. Sharpe's mother, Annie Farden, is mentioned in the Mailepai Hui partition document.] David Sharpe used a World War II-era landing boat to spread fishing nets with Hawaiian residents in the Kahana area. Mr. Yabui and his father helped in a *hukilau*-type fishing event near Kahana Sunset.

Mr. Yabui said there was a stream that ran intermittently; a dip in the road crosses the stream bed, that flowed during heavy rains. He used to go up into the valley above his home, walking on the pineapple field roads, where some native plants still grew. In those days, however, "Hawaiian culture was submerged," he said, and there was little discussion or practice of native cultural matters.

Philomen Sadang, age 66, was interviewed by telephone June 12, 2009. This interview also was originally conducted for a Cultural Impact Assessment on a neighboring property. Mr. Sadang and his family have been fishing in the cove fronting the subject property for as long as he can remember. Mr. Sadang lives down the coast in what he calls "the last fishing village" on the west side, between two condos, the Kahana Reef and the Kahana Outrigger. "I've seen this land go from chicken coops and pig pens to concrete and steel," he said. Mr. Sadang said damage to seawalls on this cove is a result of rising ocean levels that are "eating up the land" on the west side. He said in front of the subject property is "a very active fish house" where he often fishes, and his only concern about the proposed project at the time of his interview (a seawall repair next door to the Kahana Sunset) was the potential for runoff that might damage this fish population. He said he wondered what kinds of chemicals the builders would use and said that care should be taken that there is no runoff into the ocean during construction.

Joan McKelvey (originally interviewed in May 2009 for a report on the property at 11 Hale Malia Place, next door to Kahana Sunset)

Mrs. Joan McKelvey lived on a parcel next to the subject property from 1976 to 2000 in one of the first houses built around the bay in contemporary times. When they got the property, Mrs. McKelvey said, it was "sort of a wooded area," though they knew there had been some sort of post-contact dwelling there because there were steps going down to the beach. Next door lived George I. Brown, and on the north point was a beach house owned by Leighton Taylor. Mrs. McKelvey says the area was an old fishing village, and the McKelveys found artifacts such as broken poi pounders and bone fishhooks.

Erosion along the bay has been an ongoing problem. Concrete and stone steps stood intact but separated from the cliff below the home of George Brown, perhaps washed away from the cliff by a tsunami. The McKelveys had steps down to the beach that were wiped out by Hurricane Iwa.

The owners of these cliff-side properties belonged to the Hale Malia Association. They gated their community because "we were getting some unsavory characters down there,"

Mrs. McKelvey said, but anyone who called and asked for access to the bay for fishing was welcome. One neighbor in particular, the Fines, had a lot of local and Tongan friends who came down to fish.

The Lahaina Yacht Club used to have a picnic day once a month on the beach, sometimes accessing the beach through the McKelveys' property. Mrs. McKelvey does not remember what kind of fish people caught in the bay, but says that sometimes local ladies would come to take seaweed, and there were turtles in the bay.

For years, there was no lock on the McKelveys' door and no fence between them and the Kahana Sunset, which was built after their home was. Then the McKelveys began to find wallets in the bushes. They realized that thieves were going after tourists by using their property, and decided there should be a fence between them and the condominium.

Gwen Lutey and Frances Kalua, two women who formerly lived in the Nāpili area shared memories of the lifestyle they enjoyed during their youth. Gwen Lutey and the late Frances Kalua were interviewed in an informal meeting at the Hale Mahaolu Eono senior housing in Lahaina March 31, 2009. The interview was conducted during research for a Cultural Impact Assessment for a property on the other side of this cove. Also present was historical author Katherine Smith.

Frances Kalua lived in Nāpili. Her family had lived in the area for generations. Her grandfather, August Reimann, had a little ranch, with a windmill to draw water from a well for the animals. [August Reimann and other family members are listed in the Mailepai partition document and in census documents of the area from 1900.] Ms. Kalua does not recalls hearing that there used to be a fishing village in the area, and no one talked much about it. In her childhood, her aunt was the *kilo i'a,* watching from above Honolua Bay to find schools of fish. This aunt was adept at making throw nets. People would lay net and share the fish they caught. There was also plenty of the *limu* known as *lipe'e*. The shellfish known as *pipipi* were big and plentiful. They were boiled and then picked out of their shells with a pin, a process Ms. Kalua said was tedious but worth it because the *pipipi* were tasty. Another shellfish, the *kupe'e*, lived in the sand and could be found only on starry nights, and people went down to the beach to catch sand crabs as well. Her aunt delivered mail in the area, and picked up goods from Lahaina for anyone in the neighborhood who asked, dropping them off when she delivered the mail.

Gwen Amaral Lutey grew up on Nāpili Bay. Like Ms. Kalua, she remembered a rural, traditional cooperative lifestyle, in which families lived off the land. They raised chickens, pigs and ducks and shared with others. Her grandmother made 300 loaves of

bread at a time and the family worked together with her to make and sell the bread. David Fleming loved fishing, and set up a commercial operation to catch the large schools of *akule* in Honolua Bay, where the best fishing was. Some of the fish were divided among families, who would take them home to eat or dry.

Native plants were used to some extent. *Noni* was easily available, and Ms. Kalua and her brothers used to ride horses to collect *ko'oko'olau* and pick mountain apples. Both Ms. Kalua and Mrs. Lutey recalled seeing *akualele* [defined in Pukui's *Hawaiian Dictionary* as meteors] during the day and night.

Both women praised David Fleming, saying that he sold parcels in the lower portion of Mailepai Hui to local families for $500. "He never forgot the people," Mrs. Lutey said.

VI. Confidential information withheld; Conflicts in information or data

No confidential information was withheld. There were no conflicts in information or data within the reports consulted for this Cultural Impact Assessment.

VII. Conclusion

After making site inspections, interviewing knowledgeable people of the area and conducting documentary research on the subject property and the area around it, it appears that the primary concern in regard to the proposed action would be any affect it might have on the health of the bay fronting the resort. Longtime residents and fishermen say the bay is an important breeding area for *moi* and point out that fishing along this shoreline is already depleted. Proper care should be taken in the repair process to ensure that neither construction materials nor runoff impact the health of this important cultural asset.

Otherwise, the proposed action does not interfere with any known Hawaiian or non-Hawaiian gathering, practices, protocols or access. Because this section of coastline has long been developed, with little provision made for beach access when it was built up decades ago, there is essentially no public access to this beach area except from the sea. Rather than a cultural issue, the proposed action is instead an environmental issue, and decisions about the impact of that action are more properly addressed by experts on the health of the shoreline and the ocean.

References for Kahana Sunset Cultural Impact Assessment

Alexander, W.D. *1885 Hawaiian Government Survey Map.* Brought up to date in 1903 by John M. Donn.

Bartholomew, Gail. *The Index to the Maui News,* 1900-1932. Wailuku: Maui Historical Society, 1985.

—*The Index to the Maui News,* 1933-1950. Wailuku: Maui Historical Society, 1991.

Cameron, Effie, and D.E. Keane, et. al. *Plantation Days: Remembering Honolua.* Kahului: Maui Land & Pineapple Company, Inc., 1987.

Clark, John R.K. *The Beaches of Maui County.* Honolulu: University Press of Hawai‘i, 1 980.

Handy, E.S.C. *The Hawaiian Planter.* Honolulu: Bishop Museum Press, 1940.

Kaina, Silla. Personal communication, April 2009.

Kamakau, Samuel Mānaiakalani. *Ruling Chiefs of Hawaii.* Revised Edition. Honolulu: Kamehameha Schools/Bishop Estate, 1992.

Kame`eleihiwa, Lilikalā. *Native Land and Foreign Desires: Pehea Lā E Pono Ai?* Honolulu: Bishop Museum Press. 1992.

Kingdom of Hawai‘i Census. On file in microfilm section, Kahului State Public Library.

Pukui, Mary Kawena. *‘Ōlelo Noe‘au: Hawaiian Proverbs and Poetical Sayings.* Honolulu: Bishop Museum Press, 1983.

Pukui, Mary Kawena, Samuel Elbert, Esther Mo‘okini. *Place Names of Hawai‘i.* Honolulu: The University Press of Hawai‘i, 1974.

Pukui, Mary Kawena, Samuel Elbert. *Hawaiian Dictionary.* Honolulu: The University Press of Hawai‘i, 1971.

Schmitt, Robert C. *The Missionary Censuses of Hawaii.* Honolulu: Bishop Museum Press, 1973.

Smith, Katherine Kama‘ema‘e. Email communication, February 10, 2012. Ms. Smith referenced two journals given to her by a member of the Fleming family for the express purpose of entering them into the public domain. The journals record land transactions at Honolua Ranch, its predecessors and successors. The original journals are now in the Bernice P. Bishop Museum Archives, and digital copies will be available at the Office of Hawaiian Affairs PapakiloDatabase.com website.

Stauffer, Robert H. *Kahana: How the Land Was Lost.* Honolulu: The University of

Hawai‘i Press, 2004.

Sterling, Elspeth P. *Sites of Maui.* Honolulu: Bishop Museum Press, 1998.

The Maui News. Wailuku: Maui Publishing Company, 1900-1972.

U.S. Census Bureau. *Twelfth Census of the United States: 1900 Population.* Accessed through Ancestry.com.

Waihona ‘Āina. On-line Hawaiian land-document database at www.waihona.com. Accessed Feb. 17, 2012.

Walker, Alan T. and Paul H. Rosendahl. “Testing of Cultural Remains Associated with the Kahana Desilting Basin.” Report 128-040185, prepared for U.S. Department of Agriculture Soil Conservation Service, 1985.

Walker, William M. *Archaeology of Maui.* Draft report archived at Maui Historical Society, Wailuku.

Watson, Leslie J. “Old Hawaiian Land Huis—Their Development and Dissolution.” *The Honolulu Star-Bulletin,* December 12-16, 1932.

Wilcox, Carol. *Sugar Water: Hawaii's Plantation Ditches.* Honolulu: University of Hawai‘i Press, 1996.

Appendices

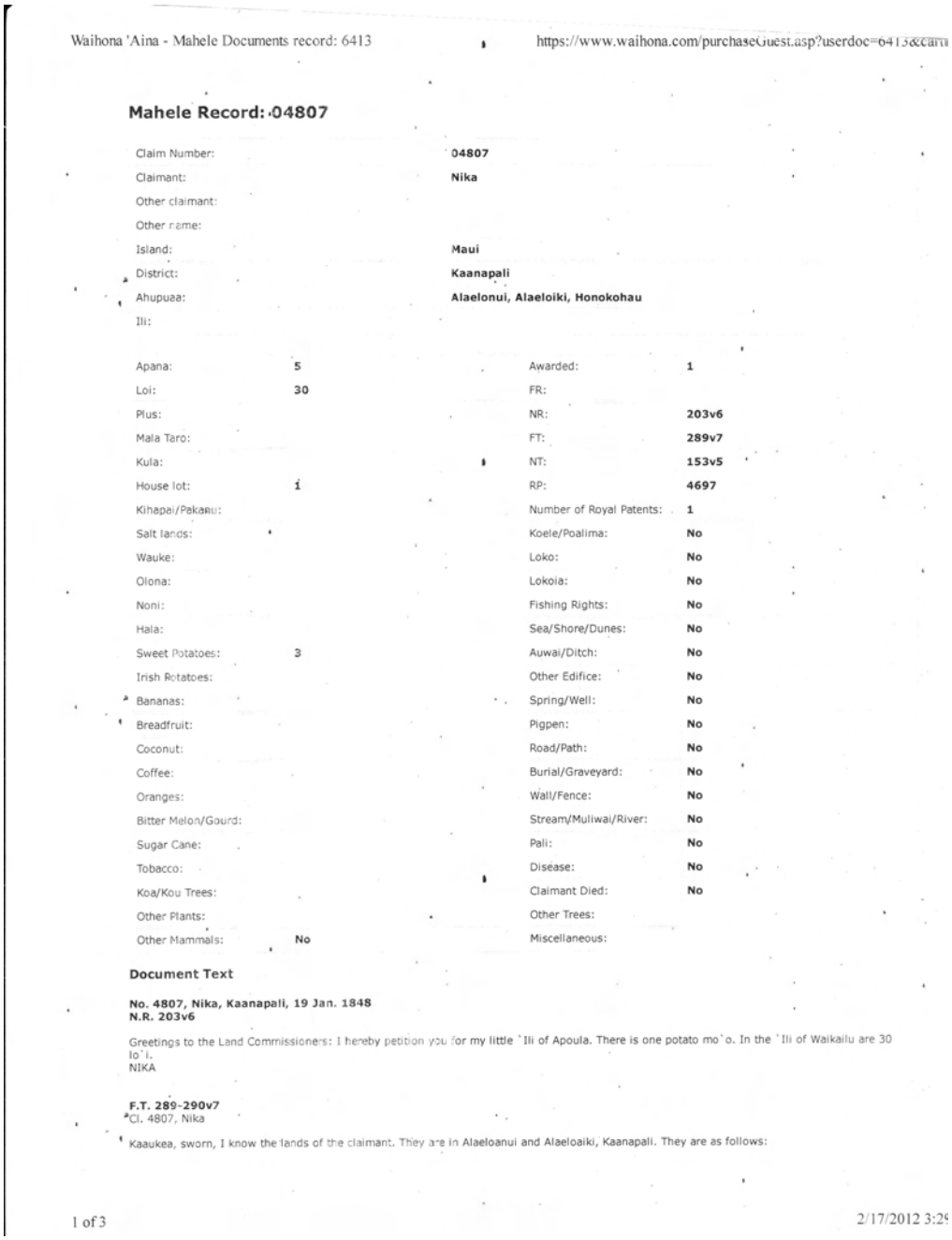

Waihona 'Aina - Mahele Documents record: 6413 https://www.waihona.com/purchaseGuest.asp?userdoc=6413&cart

Mahele Record: 04807

Claim Number:	**04807**
Claimant:	**Nika**
Other claimant:	
Other name:	
Island:	**Maui**
District:	**Kaanapali**
Ahupuaa:	**Alaelonui, Alaeloiki, Honokohau**
Ili:	

Apana:	**5**	Awarded:	**1**
Loi:	**30**	FR:	
Plus:		NR:	**203v6**
Mala Taro:		FT:	**289v7**
Kula:		NT:	**153v5**
House lot:	**1**	RP:	**4697**
Kihapai/Pakaau:		Number of Royal Patents:	**1**
Salt lands:		Koele/Poalima:	**No**
Wauke:		Loko:	**No**
Olona:		Lokoia:	**No**
Noni:		Fishing Rights:	**No**
Hala:		Sea/Shore/Dunes:	**No**
Sweet Potatoes:	**3**	Auwai/Ditch:	**No**
Irish Potatoes:		Other Edifice:	**No**
Bananas:		Spring/Well:	**No**
Breadfruit:		Pigpen:	**No**
Coconut:		Road/Path:	**No**
Coffee:		Burial/Graveyard:	**No**
Oranges:		Wall/Fence:	**No**
Bitter Melon/Gourd:		Stream/Muliwai/River:	**No**
Sugar Cane:		Pali:	**No**
Tobacco:		Disease:	**No**
Koa/Kou Trees:		Claimant Died:	**No**
Other Plants:		Other Trees:	
Other Mammals:	**No**	Miscellaneous:	

Document Text

No. 4807, Nika, Kaanapali, 19 Jan. 1848
N.R. 203v6

Greetings to the Land Commissioners: I hereby petition you for my little `Ili of Apoula. There is one potato mo`o. In the `Ili of Waikailu are 30 lo`i.
NIKA

F.T. 289-290v7
Cl. 4807, Nika

Kaaukea, sworn, I know the lands of the claimant. They are in Alaeloanui and Alaeloaiki, Kaanapali. They are as follows:

1 of 3 2/17/2012 3:29

Appendix 1: Māhele record from waihona.com

No. 1 is a kula uala in Alaeloanui.
No. 2 is a kula uala in Alaeloanui.
No. 3 is a house lot in Alaeloanui.
No. 4 is a kula uala in Alaeloaiki.
No. 5 is a kalo land in Alaeloaiki.

The claimant received these lands in Alaeloanui from his ancestors, also possessed them in the days of Kamehameha I and the land in Alaeloaiki in 1837 and his title has never been disputed.

No. 1 is bounded:
Mauka by the land of Pahuai
Lahaina by the ahupuaa of Mailepai
Makai by Lupea's land
Kahokuloa by "Honokeana."

No. 2 is bounded:
Mauka by Kuaole's land
Lahaina by "Mailepai"
Makai by Lakela's land
Kahakuloa by "Konokeana."

No. 3 is bounded:
Mauka by Kuaole's lot
Lahaina by the creek of Alaelcaiki
Makai by the sea shore
Kahakuloa by Alaeloaiki.

No. 4 is bounded:
Mauka by Kuaole's land
Lahaina by "Mailepai"
Makai by Lakela's land
Kahakuloa by "Honokeana."

No. 5 is bounded:
Mauka by Kaleiepu's land
Lahaina by "Mailepai"
Makai by Kapahuwai's land
Kahakuloa by "Honokeana."

N.T. 153v5
No. 4807, Nika

Kaaukea, sworn, He has seen Nika's lands of 5 sections in the ahupuaa Alaeloanui and Alaeloaiki. Sections in Alaeloanui from Nika's parents at the time of Kamehameha I. 2 sections in Alaeloaiki from Kekanai at the time of Hoapili in 1837, no objections.

Section 1 - Potato pasture in Alaeloanui ahupuaa.
Mauka by Kapuhuwai
Lahaina by Mailepai stone enclosure
Makai by Lupea
Kahokuloa Honokeana ahupuaa.

Section 2 - Potato pasture in Alaeloanui ahupuaa.
Mauka by Kuaole
Lahaina by Mailepai ahupuaa
Makai by Lakela
Kahakuloa by Konokeana ahupuaa.

Section 3 - Potato pasture and house lot at the enclosure of Mailepai.
Mauka by Kuaole
Lahaina by Alaeloaiki stream
Makai by Sea
Kahakuloa by Alaeloaiki ahupuaa.

Section 4 - Potato pasture at Alaeloaiki ahupuaa.
Mauka by Kuaole
Lahaina by Mailepai ahupuaa
Makai by Lakela
Kahakuloa by Honokeana ahupuaa.

Section 5 - Taro land at Alaeloaiki ahupuaa.
Mauka by Kaleiepu
Lahaina by Mailepai ahupuaa
Makai by Kapahuwai
Kahakuloa by Honokeana ahupuaa.

[Award 4807; R.P. 4697; Alaeloanui Kaanapali; 4 ap.; 5.8; Mailepai Honokohau Kaanapali; 1 ap.; 1.7 Acs]

04807 - No maps found.

Māhele data page 2

AFFIDAVIT OF PUBLICATION

STATE OF HAWAII, } ss.
County of Maui. }

Rhonda M. Kurohara being duly sworn deposes and says,that she is in Advertising Sales of the Maui Publishing Co., Ltd., publishers of THE MAUI NEWS, a newspaper published in Wailuku, County of Maui, State of Hawaii; that the ordered publication as to Information Wanted for Cultural Impact Assessment

of which the annexed is a true and correct printed notice, was published 2 times in THE MAUI NEWS, aforesaid, commencing on the 22nd day of February, 2012, and ending on the 24th day of February, 2012, (both days inclusive), to-wit: on February 22, 24, 2012

and that affiant is not a party to or in any way interested in the above entitled matter.

This 1 page Information Wanted, dated February 22, 24, 2012, was subscribed and sworn to before me this 24th day of February, 2012, in the Second Circuit of the State of Hawaii, by Rhonda M. Kurohara

Notary Public, Second Judicial Circuit, State of Hawaii

BETTY E. UEHARA
My Commission expires 09-26-15

BETTY E. UEHARA NOTARY PUBLIC No. 83-344 STATE OF HAWAII

Information Wanted for Cultural Impact Assessment

Maui Island Press requests information on culture resources or activities on or near this parcel in Napili, Maui: TMK (2) 4-3-003:015.

Please contact MIP within 30 days at (808) 242-5459.

(MN: Feb. 22, 24, 2012)

The Maui News Affidavit of Publication

APPENDIX I
Archaeological Monitoring Plan

ARCHAEOLOGICAL MONITORING PLAN FOR THE REPAIR & REPLACEMENT OF SEA WALLS AND DEMOLITION OF CONCRETE STAIRWAY TMK: 4-03-003: 015 ALAELOA *AHUPUA'A;* LAHAINA DISTRICT ISLAND OF MAUI

FOR: Ms. Jaqueline Scheibel of Kahana Sunset

BY: Lisa J. Rotunno-Hazuka (B.A.)
and Jeffrey Pantaleo (M.A.)

March 2012

ARCHAEOLOGICAL SERVICES HAWAII, LLC.
1930 A Vineyard Street
Wailuku, HI 96793

"Protecting, Preserving, Interpreting the Past, While Planning the Future"

INTRODUCTION

At the request of Ms. Jaqueline Scheibel, and per the likelihood of a recommendation by the State Historic Preservation Division (SHPD), Archaeological Services Hawaii, LLC (ASH) of Wailuku has prepared this monitoring plan for all ground disturbing activities to be conducted at the Kahana Sunset, Alaeloa *ahupua'a*, Lahaina District, Island of Maui, TMK: (2) 4-3-003: 015 (Figures 1 and 2).

The proposed improvements will undergo governmental review through the environmental assessment (E.A) process. These improvements consist of the installation, repair and replacement of sea walls and the demolition of a concrete stairway (Figure 3). In the event that additional offsite work is necessary for the completion of this project, this monitoring plan would cover all additional work.

PROJECT AREA DESCRIPTION

The project area is located along the shoreline in West Maui. It is situated at 4909 Lower Honoapiilani Road at the Kahana Sunset. The subject area is improved with condominium structures, pool, ancillary buildings, landscaping and underground utilities. Additionally, two Land Commission Awards, LCA, (LCA 4807 Ap. 3 and LCA 4807:4) are present within the project area boundaries and likely represent former habitation and agricultural activities (see Figure 2). No known inventory survey has been conducted of the subject parcel, however several properties along the coast undergoing re-development have documented subsurface historic properties (Ka`anapali Villas, Marriott, and etc.).

Four archaeological investigations were conducted in close proximity to the subject parcel. In 2003, just northeast of the project area, and AIS with 5 backhoe trenches was performed by Scientific Consultant Services, Inc., at TMK 4-3-003:025 with negative findings (Dega and Zachman 2003). An archaeological inventory survey (AIS) was conducted by Xamanek Researches in early 1999 for a 1.4 mile section of Lower Honoapiilani Highway extending from Napilihau Street to Ho`ohui Road and includes the portion of the highway fronting the project area. No historic properties were identified in close proximity to the Kahana Sunset, however three sites; Site 4797 (pre-Contact habitation deposit) and 4798 (historic retaining wall and shoulder barrier wall) were documented *makai* of Puamana Place and another historic retaining wall, Site 4799, was identified *makai* of the highway by

Hui Road D (Fredericksen and Fredericksen 2000). At TMK 4-3-003:043, further northeast of the subject parcel, an archaeological assessment was undertaken by CRM Solutions Hawaii, Inc. A total of 5 backhoe trenches were executed and no historic properties were documented (Conte 2005). In 1992, an AIS with two test units, was performed by Archaeological Consultants of Hawaii, Inc., at TMK 4-3-003:108 and 110 (southeast of project area). No archaeological sites were recorded and per Kennedy et. al., the negative findings were likely due to the parcel being formerly cultivated in pineapple.

EXPECTABILITY OF SUBSURFACE SITES

Based on the above information, and most importantly, that recent re-developments along the shoreline have documented numerous significant subsurface historic properties; it is possible that subsurface pre-Contact burials, remnant traditional cultural layers, historic refuse deposits, and buried architecture from both the pre-Contact and historic periods may be extant; thus all ground-disturbing activities shall be monitored according to the following monitoring plan.

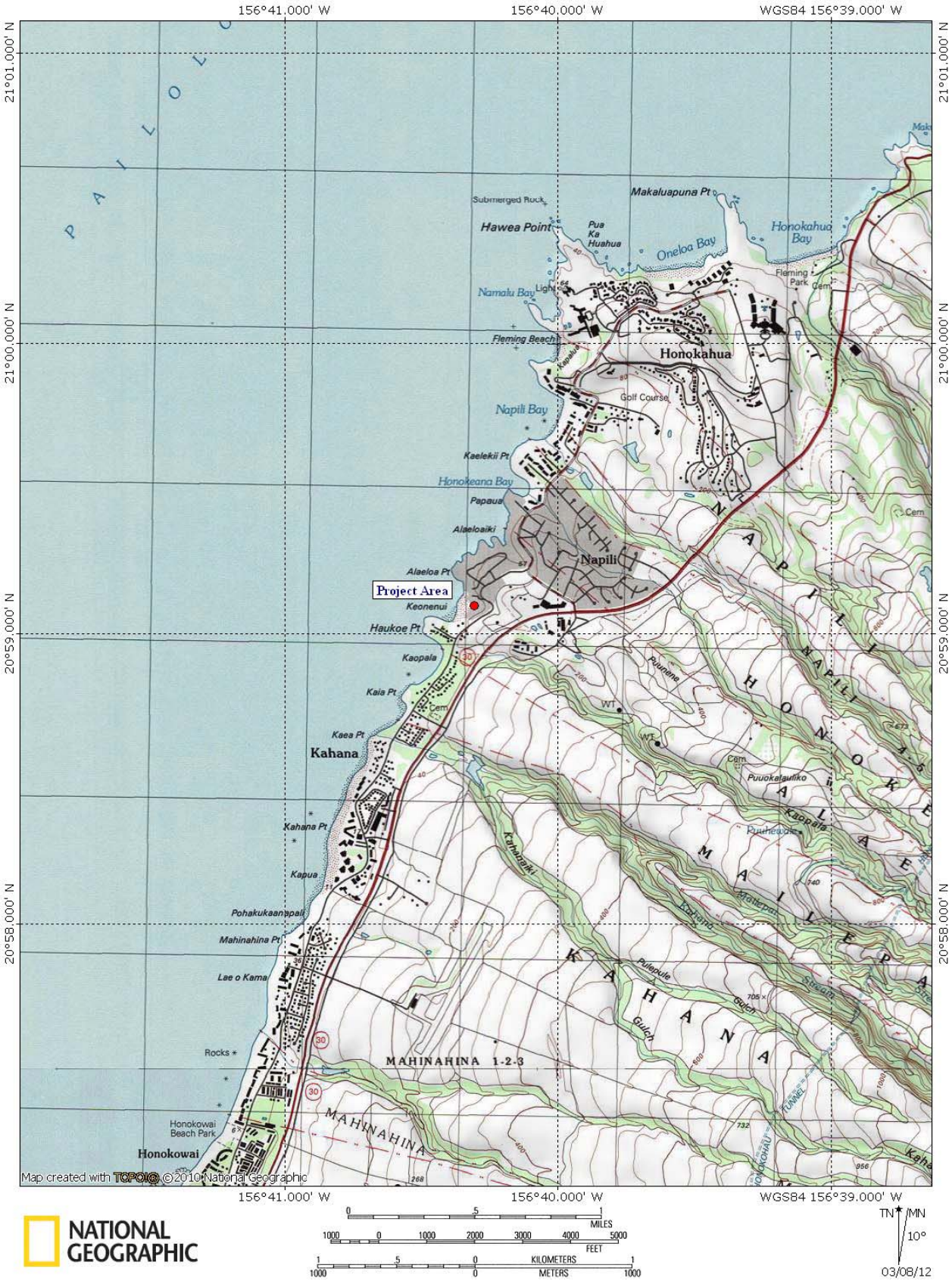

Figure 1. Location of Project Area on USGS Quadrangle

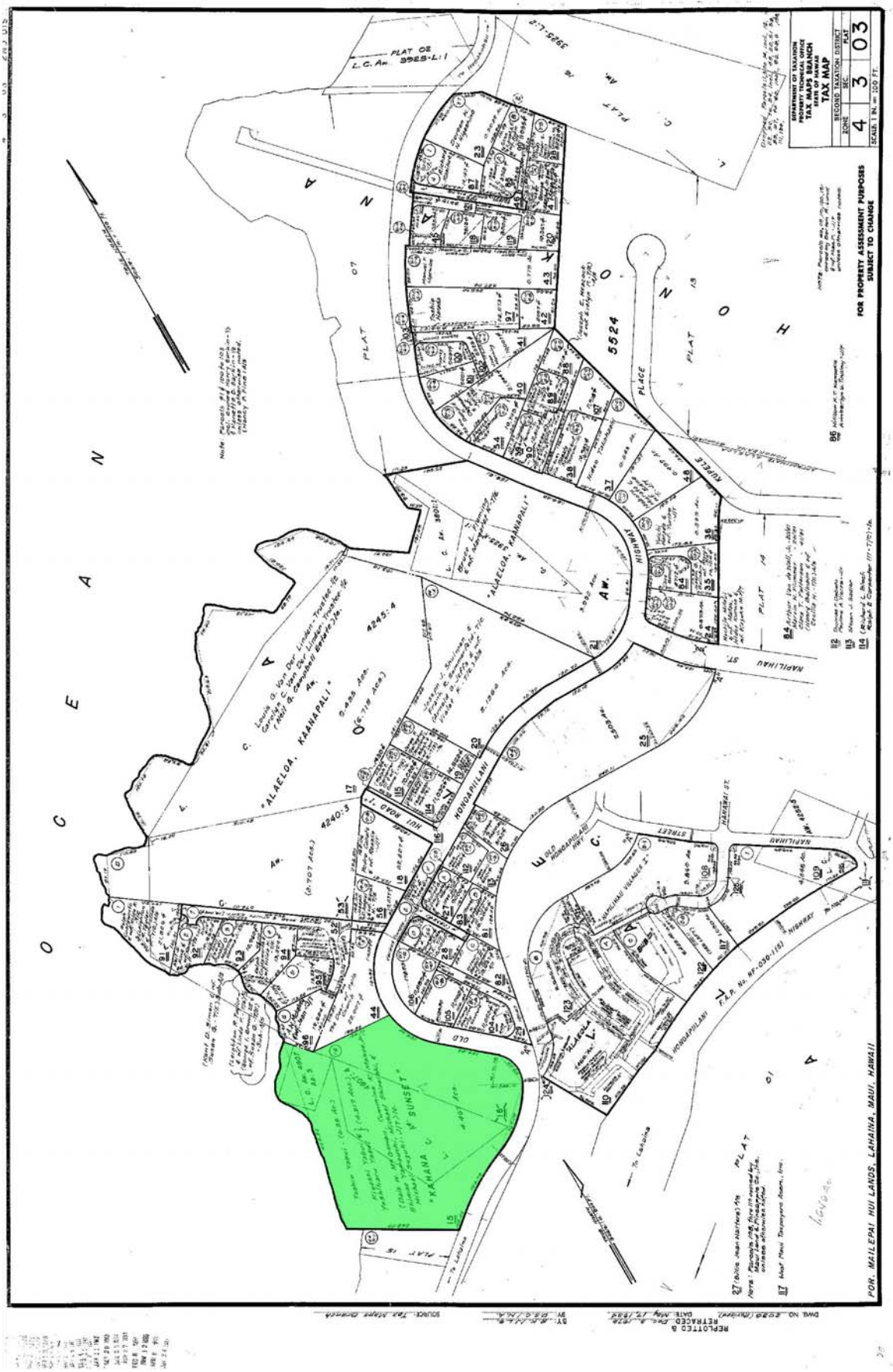

Figure 2. Location of Project Area on Tax Map Key

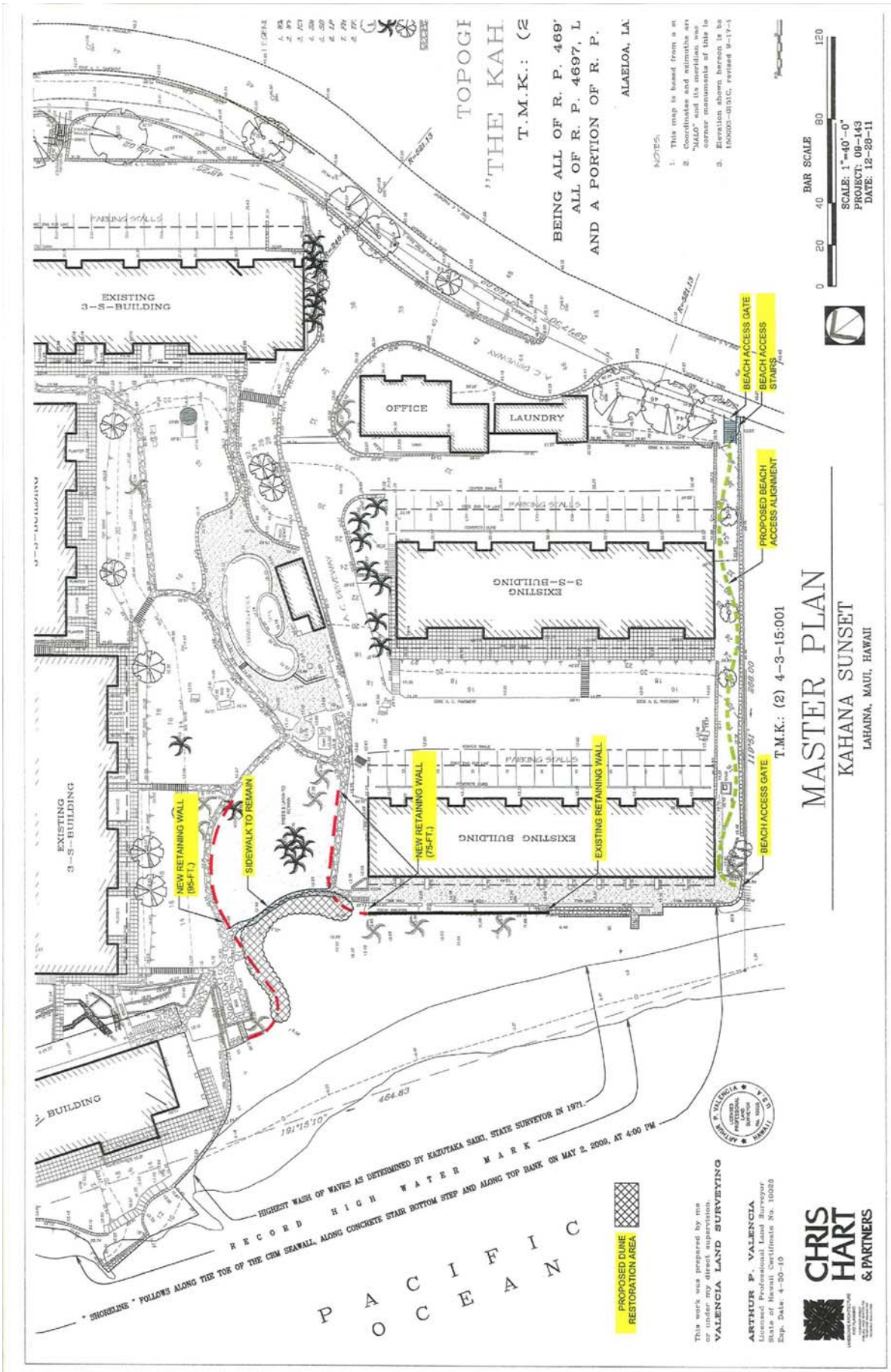

Figure 3. Project Area Master Plan

MONITORING PLAN

The construction plans call for excavations ranging from 2.0 to 7.0 feet in depth. Full-time monitoring will be the protocol for this project. In the event that rock, sterile fill deposits and or the water table is encountered, monitoring procedures may need to be adjusted; however no changes may be made without consultation and approval by SHPD via telephone and or in writing. SHPD will also be notified of the onset and completion of the proposed undertaking.

One archaeological monitor per piece of ground disturbing equipment is the protocol for this monitoring project. Dependent on availability, Maui resident archaeologists will be assigned to this project. Prior to the commencement of construction, all pertinent parties including but not limited to construction and archaeological personnel will be informed of the monitoring procedures as stipulated in the monitoring plan, as well as the monitors' authority to halt work in the vicinity of a find. In the event that subsurface sites are exposed during construction, ground-disturbing activities in the immediate area will temporarily halt and project activities may shift to other areas of the project. Once the archaeologist makes an assessment, they will then consult with SHPD to determine the appropriate mitigation measures for the find. The area around the site shall be protected by erecting orange fencing or yellow caution tape. The site will be recorded utilizing all standard archaeological methods and procedures. Stratigraphic profiles will be drawn, photographs will be taken, and soil samples collected not only from the subsurface site, but from selected locations within the project area. If nighttime work is performed, the general contractor must notify the consulting archaeologist at least 3 days in advance. The archaeological monitor has sole discretion to determine if lighting is adequate to perform visual inspections of the soil.

If historic bottles are found they are to be collected by the archaeologist. No bottles may be collected or taken by any construction worker.

In the event that human remains are inadvertently exposed during this undertaking, the aforementioned procedures of halting and securing the site will be performed. After an initial assessment is made by Mr. Hinano Rodrigues of SHPD, and members of the Maui/Lana'i Islands Burial Council-MLIBC (if the remains are believed to be Native Hawaiian), procedures for documenting the burial find shall be undertaken. These

mitigation measures may include mapping and collecting displaced human skeletal remains, however no human skeletal remains will be collected without authorization from SHPD. Additional documentation will include, raking and screening of the area to collect all displaced human remains, and excavations to ascertain the context (*in situ* or displaced) and number of individuals represented by the skeletal remains.

PROCEDURES FOR DISPLACED HUMAN SKELETAL REMAINS

The procedures for exposed skeletal remains and possible burial pit outlines are presented below.

1. Upon identification of displaced human remains, a possible burial pit outline, or basalt and coral manuports all construction activities in the immediate area of the find is temporarily halted.

2. SHPD and the MLIBC shall be notified.

3. Mark the perimeter of the avoidance area with yellow caution tape, and or orange construction fencing and cover the remains to protect them from the elements

4. Extend a baseline through the center of the dispersal area.

5. After notification and concurrence with SHPD, mark all displaced remains with pin flags and produce a plan view map. Locate and identify displaced remains and only collect the displaced remains if authorized by SHPD personnel.

6. If a concentration is identified, map the concentration and leave in place for determination of disposition and controlled manual excavations, as warranted.

7. Manually rake bulldozed or other mechanically produced tailings and screen push piles to collect all displaced and fragmented remains.

8. If no concentration was identified and raking is complete, skip to blade testing on item #13.

9. Complete an osteological inventory of the collected remains to determine the components that may be left *in situ* or missing.

10. If a concentration or possible burial pit was identified, notify SHPD of the possible burial feature and ask for written authorization to test the possible burial feature. Once authorization for testing has been received by SHPD, place a 2.0 by 2.0 meter controlled test unit, centrally locating the concentration within the test unit. Clean the surface with a trowel to determine if a pit outline is present. Map pit outline.

11. If SHPD has provided written authorization to test an *in situ* burial, excavate the *in situ* portion to identify any articulation, document the articulated portion within the pit outline, and collect all clearly displaced remains. Articulated remains and those in an anatomically correct position, shall be left in place until a disposition determination can be made by SHPD in consultation with the MLIBC.
12. Fill out all test excavation and burial forms and draw a plan view map of the *in situ* remains. Then cover remains with a thin layer of sand (if SHPD and MLIBC have seen the feature) and or tarp.

13. Conduct mechanical blade testing in potential areas of further discoveries. Blade testing is conducted by removing shallow (2-6") lifts over a predetermined area.

After the above referenced procedures have been performed, a Burial Treatment Plan will be prepared in consultation with the owner, SHPD and the MLIBC (if the remains are believed to be Native Hawaiian).

Upon completion of the fieldwork, all necessary lab procedures including but not limited to processing, cataloguing and analyses of artifacts and photographs; analyses of soil samples as warranted and submitting of charcoal samples for radiocarbon dating will be performed. All analyses will be synthesized into a final monitoring report, and the report shall be submitted within 180 days of the completion of fieldwork. Copies of this report will be sent to the State Historic Preservation Division offices on Oahu and Maui for their review and comments.

All notes, photographs and artifacts will be archived at the offices of Archaeological Services Hawaii, LLC at 1930 A Vineyard Street, Wailuku, HI 96793.

REFERENCES

Conte, Patty

2005 *Archaeological Assessment Report for TMK (2) 4-3-03:043, Mailepai Ahupua`a, Lahaina District, Island of Maui.* CRM Solutions. Makawao.

Dega, Michael and John Zachman

2003 *Archaeological Inventory Survey on a Parcel in Napili, Alaeloa Ahupua`a, Kaanapali District, Maui Island (TMK:4-3-003:025).* Scientific Consultant Services, Inc., Honolulu.

Fredericksen and Fredericksen

2000 *Archaeological Inventory Survey of The Lower Honoapi`ilani Road Improvements Project Corridor (TMK 4-3-03; 4-3-05; 4-3-10; 4-3-15) Lahaina District, Maui Island,* Xamanek Researches, Pukalani.

Kennedy, Joseph, Laura Reintsema, Patrick J. Trimble, MaryAnne B. Maigret

1992 *Archaeological Inventory Survey with Subsurface Testing Report for a Property Located at TMK: 4-3-03:108 and 110, Alaeloa Ahupua`a, Lahaina District, on the Island of Maui.* ACH, Haleiwa.

NEIL ABERCROMBIE
GOVERNOR OF HAWAII

WILLIAM J. AILA, JR.
CHAIRPERSON
BOARD OF LAND AND NATURAL RESOURCES
COMMISSION ON WATER RESOURCE MANAGEMENT

GUY KAULUKUKUI
FIRST DEPUTY

WILLIAM M. TAM
DEPUTY DIRECTOR - WATER

AQUATIC RESOURCES
BOATING AND OCEAN RECREATION
BUREAU OF CONVEYANCES
COMMISSION ON WATER RESOURCE MANAGEMENT
CONSERVATION AND COASTAL LANDS
CONSERVATION AND RESOURCES ENFORCEMENT
ENGINEERING
FORESTRY AND WILDLIFE
HISTORIC PRESERVATION
KAHOOLAWE ISLAND RESERVE COMMISSION
LAND
STATE PARKS

STATE OF HAWAII
DEPARTMENT OF LAND AND NATURAL RESOURCES

HISTORIC PRESERVATION DIVISION
KAHUHIHEWA BUILDING
601 KAMOKILA BLVD, KAPOLEI HI 96707

May 7, 2012

Lisa Rotunno-Hazuka
Archaeological Services Hawaii, LLC
1930 A Vineyard Street
Wailuku HI 96793

LOG NO: 2012.0765
DOC NO: 1205JP02
Archaeology

Dear Ms. Rotunno-Hazuka:

SUBJECT: **Chapter 6E-42 Historic Preservation Review-**
Archaeological Monitoring Plan
Alaeloa Ahupua'a, Lahaina District, Island of Maui
TMK (2) 4-3-003:015 (por.)

Mahalo for the opportunity to review the draft plan titled *Archaeological Monitoring Plan for the Repair & Replacement of Sea Walls and Demolition of Concrete Stairway TMK: 4-03-003:015, Alaeloa Ahupua'a, Lahaina District, Island of Maui* by Lisa J. Rotunno-Hazuka and Jeffrey Pantaleo (March 2012). This document was received by our office on March 20, 2012.

We recommend an archaeological monitoring program be initiated for the proposed improvements project at Kahana Sunset; therefore, thank you for submitting the subject plan. The proposed work will occur within isolated sections of the developed 4.467 acre parcel.

This monitoring plan outlines the proposed objectives and procedures that will be implemented to prevent damage to unknown sites including the identification and documentation of any newly discovered archaeological and cultural features. The plan meets the requirements of Hawaii Administrative Rules §13-279 and is accepted. Please send one hardcopy of the document, clearly marked **FINAL**, along with a copy of this review letter and a text-searchable PDF version on CD to the Kapolei SHPD office, attention SHPD Library.

Please contact Jenny Pickett at (808) 243-5169 or Jenny.L.Pickett@Hawaii.gov if you have any questions regarding this letter.

Aloha,

Theresa K. Donham
Archaeology Branch Chief

cc: Chris Hart & Partners, Attn: Raymond Cabebe Via email: RCabebe@chpmaui.com
County of Maui, Department of Planning Via fax: (808) 270-7634
County of Maui DSA via fax to: (808) 270-7972

APPENDIX J
Preliminary Engineering Report

PRELIMINARY ENGINEERING REPORT FOR KAHANA SUNSET CONDOMINIUM KAHANA, MAUI

Prepared For:

Apartment Owners Association of
Kahana Sunset Condominium Complex
Kahana, Maui

Prepared By:
Marc M. Siah & Associates, Inc.

April 2012

Marc M. Siah & Associates, Inc.

Consulting Civil • Structural • Environmental & Ocean Engineers
820 South Beretania Street, Suite 201, Honolulu, Hawaii 96813

TABLE OF CONTENTS

Marc M. Siah & Associates, Inc.

Consulting Civil • Structural • Environmental & Ocean Engineers
820 South Beretania Street, Suite 201, Honolulu, Hawaii 96813

PRELIMINARY ENGINEERING REPORT FOR KAHANA SUNSET CONDOMINIUM

TABLE OF CONTENTS

SECTION	TITLE	PAGE
1.0	**INTRODUCTION**	
1.1	Project Background and Description	1-1
1.2	Scope of Report	1-3
2.0	**PROJECT CHARACTERISTICS**	
2.1	Description of the Project and Location	2-1
2.2	Land Use	2-3
2.3	Topographic and Geotechnical Features	2-3
2.4	Flora	2-5
3.0	**DESCRIPTION OF EXISTING INFRASTRUCTURE**	
3.1	Site Layout and Roadways	3-1
3.2	Water System	3-2
3.3	Wastewater System	3-4
3.4	Storm Drainage System	3-7
3.5	Electric, Telephone and Cable TV System	3-12
3.6	Propane Tanks	3-12
4.0	**INFRASTRUCTURE ADEQUACY EVALUATION**	
4.1	Potable Water System	4-1
4.2	Wastewater System	4-2
4.3	Electric, Telephone and Cable TV Systems	4-4
4.4	Storm Drain System	4-5
4.5	Proposed Improvements	4-7
4.6	Conclusions and Recommendations	4-9

APPENDICES:

Appendix A – Potable Water Demand, Wastewater Generation Rates, and Electrical Loads calculations

Appendix B – System Head Curve and Pump Performance Curve

TABLE OF CONTENTS
(Continued)

LIST OF FIGURES

FIGURE	TITLE	PAGE
1-1	General Location Map	1-2
1-2	Aerial Vicinity Map	1-4
2-1	Property Tax Map	2-2
2-2	Site Plan	2-4
3-1	Existing Water System at Kahana Sunset	3-3
3-2	Abandoned Wastewater System Infrastructure at Kahana Sunset	3-6
3-3	Existing Wastewater Infrastructure at Kahana Sunset	3-8
3-4	Existing Storm Drain Infrastructure at Kahana Sunset	3-9
3-5	Details of Strom Drain Infrastructure at Kahana Sunset	3-10
3-6	Electrical, Telephone & Cable TV Systems at Kahana Sunset	3-13
4-1	System Head Curve for Pump Unit at Kahana Sunset	4-4
4-1	Proposed Improvements for Kahana Sunset	4-8

TABLE OF CONTENTS
(Continued)

LIST OF TABLES

TABLE	TITLE	PAGE
3-1	Specific Details about various Units at Kahana Sunset	3-2
3-2	Water Consumption at Kahana Sunset	3-4
4-1	Wastewater Generation Rates at Various Building in Kahana Sunset	4-3
4-2	Estimates of Various Electrical Loads in Kahana Sunset	4-5

SECTION 1.0

INTRODUCTION

Marc M. Siah & Associates, Inc.

Consulting Civil • Structural • Environmental & Ocean Engineers
820 South Beretania Street, Suite 201, Honolulu, Hawaii 96813

SECTION 1.0

INTRODUCTION

1.1 Project Background and Description

The Kahana Sunset Condominium Complex is a multi-unit residential development in west Maui. The project site is located on a land parcel along the shorelines of Keonenui Bay which stretches between Alaeloa Point and Haukoe Point along west Maui coast. A vicinity map indicating the general location of the condominium property is shown in Figure 1-1. The complex is exposed to north swells and trade wind waves which undergo significant transformation as they approach the land and enter the bay. This exposure causes chronic beach erosion and accretion with occasional and at times sever structural damage to foundations and footings of existing protective coastal fortifications requiring reconstruction and repair under emergency conditions. At two recent occasions, specific emergency repairs were necessitated for seawalls fronting Buildings F and Building A, which were performed under emergency permits SM3 2009/0005 and SM3 2003/0001, respectively.

At the present time and in order to address the failure of the retaining wall fronting the BBQ pavilion/shower and to construct additional modifications to the protective seawalls in accordance with the development plan for shore protection, the Kahana Sunset AOAO is in the process of preparing a Master Plan and applying for a Shoreline Setback Variance (SSV) and Special Management Area (SMA) Use Permit. The SSV is necessary to allow additional construction work on the failing seawall and other planned modifications and additions to protective seawalls and coastal structures within the Shoreline Setback Area. In compliance with the State environmental review process, the Kahana Sunset AOAO is also preparing an Environmental Assessment for these modifications and renovations. In line with, and concurrent with these efforts, Marc M. Siah and Associates, Inc. is commissioned by the Kahana Sunset Condominium AOAO, to prepare a preliminary engineering report and drainage report for the Kahana Sunset Condominium Complex.

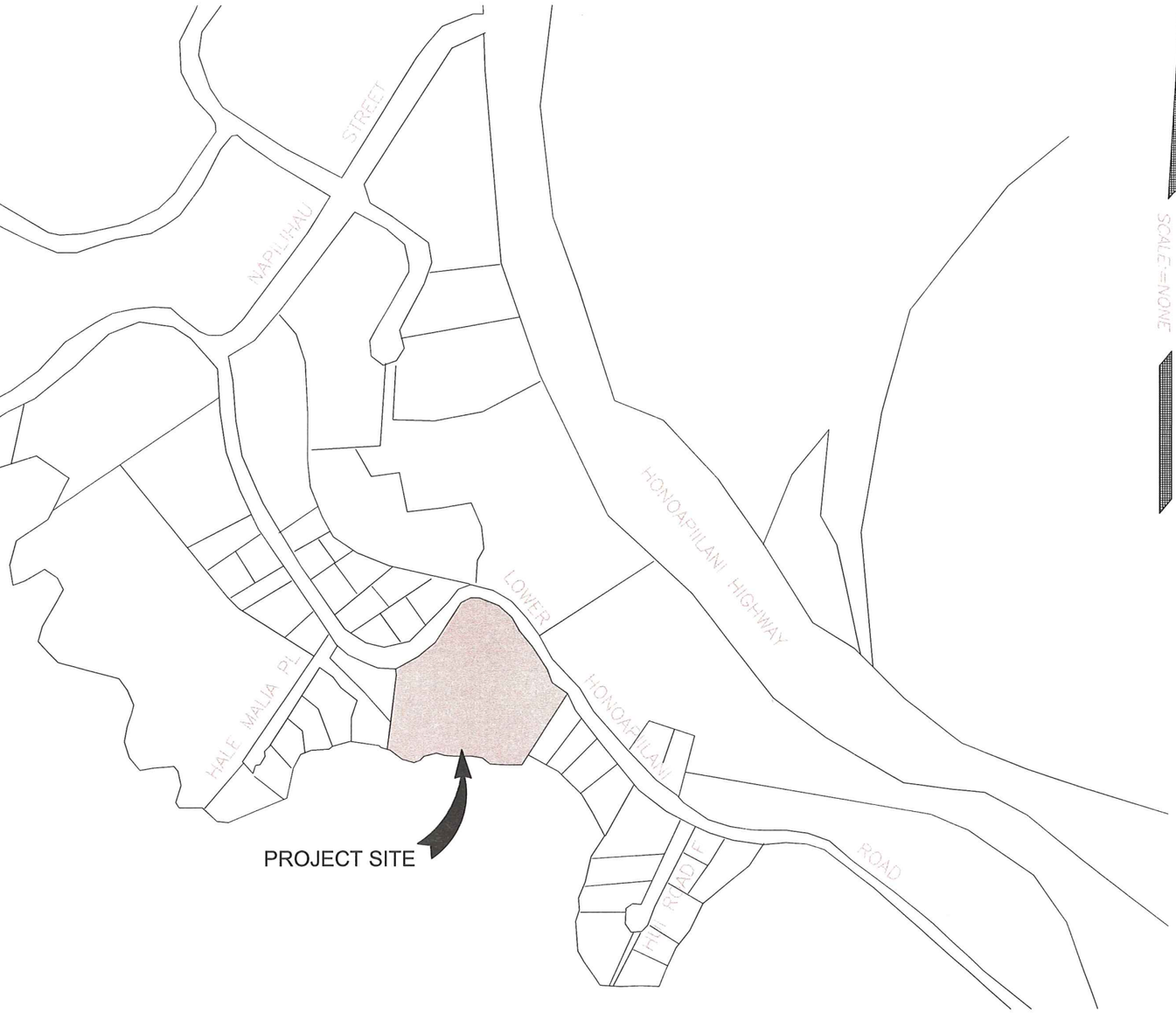

LOCATION MAP

VICINITY MAP

Marc M. Siah & Associates, Inc.
Consulting Civil . Structural . Environmental & Ocean Engineers
810 S. Beretania Street, Suite 201, Honolulu, Hawaii 96813

FIGURE 1-1 GENERAL LOCATION MAP
SCALE: NONE

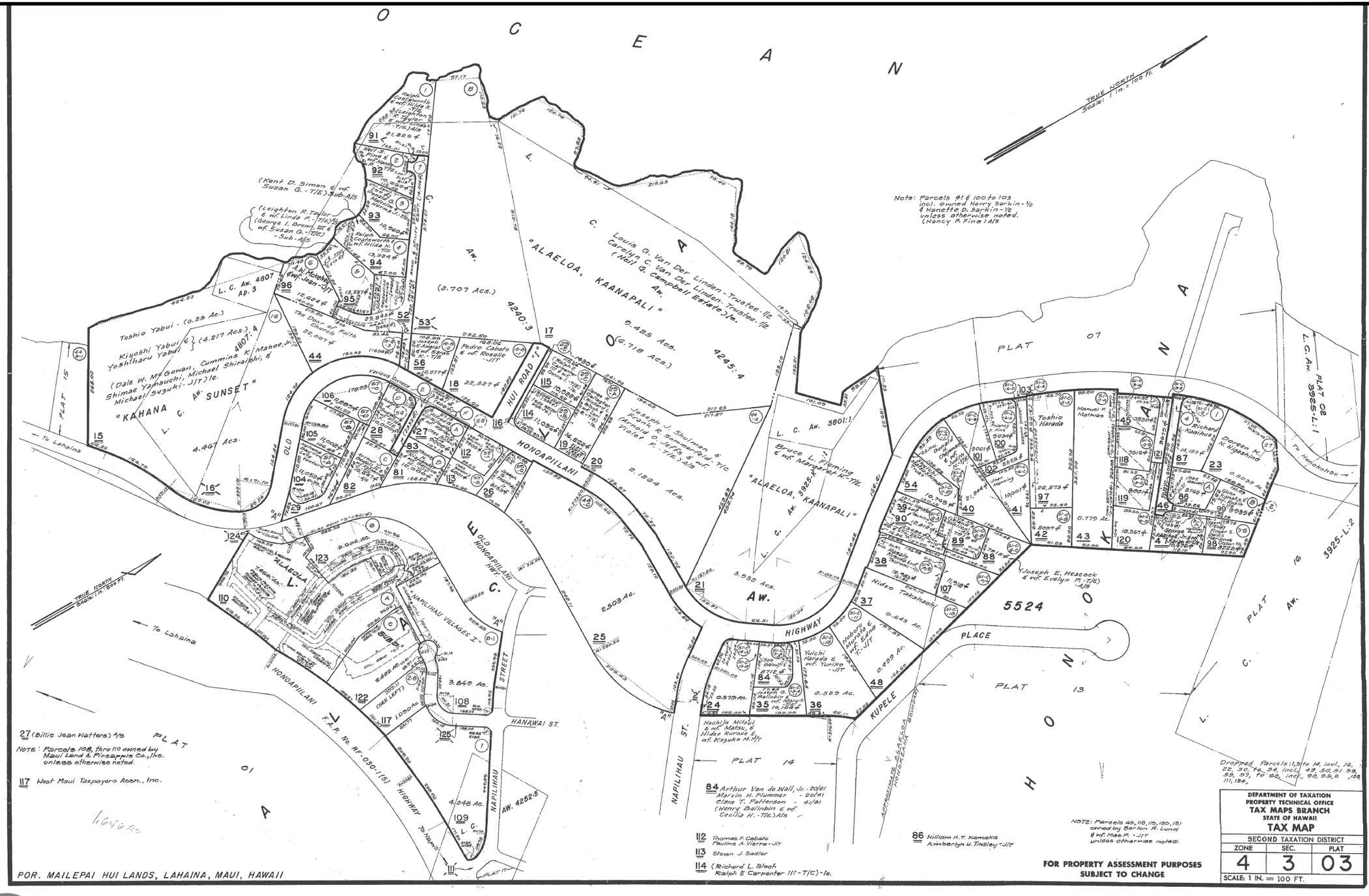

Marc M. Siah & Associates, Inc.
Consulting Civil . Structural . Environmental & Ocean Engineers
810 S. Beretania Street, Suite 201, Honolulu, Hawaii 96813

FIGURE 2-1 PROPERTY TAX MAP
SCALE: NONE

The multi-unit condominium complex sits on a 4.467 acre land parcel and consists of five residential buildings encompassing 79 units of one and two-bedroom apartments, plus a separate 4-bedroom apartment for the complex's resident manager, and a detached building housing three offices and a laundry room. The condominium complex was constructed in early 1960s which has undergone renovations and additions in later years. Aerial extent of the development is depicted in Figure 1-2.

1.2 Scope of Report

This Preliminary Engineering Report describes the existing infrastructure at Kahana Sunset Condominium Complex, ranging from water to wastewater, drainage, roadways and parking, electrical and telephone system. The report attempts to identify inadequacies in the infrastructure and to provide recommendations for improvements and upgrading to the existing system.

Figure 1-2 Aerial Vicinity Map

SECTION 2.0

PROJECT CHARACTERISTICS

Marc M. Siah & Associates, Inc.

Consulting Civil • Structural • Environmental & Ocean Engineers
820 South Beretania Street, Suite 201, Honolulu, Hawaii 96813

SECTION 2.0

PROJECT CHARACTERISTICS

2.1 Description of the Project and Location

Kahana Sunset Condominium Complex is located on a 4.467-acre land parcel at 4909 Lower Honoapiilani Road along the western coast of the island of Maui. The land parcel is identified by Tax Map Key (TMK): 2-4-3-03:015 comprised of all of R. P. 4697, L.C. AW. 4807:03 to NIKA 2, all of R. P. 4697, L. C. AW. 4807:04 to NIKA 2, and Portion of R. P. AW. 5524 to L. KONIA. The Tax Map for the condominium complex is depicted in Figure 2-1.

The land parcel is zoned "R-3 Residential District" by Maui County. It consists of a mix of five separate two and three-story composite structures encompassing 79 units of two and one-bedroom apartments, plus a manager's residence and offices and a detached laundry building. The complex was originally constructed in 1960s and has undergone several phases of alterations and/or renovations since then. There are a total of 16 one-bedroom units and 63 two-bedroom units in five detached structures referred to as Building "A" to "F" in addition to a 4-bedroom unit used as the property manager's residence and office in Building "G" plus three offices and a laundry room in a separate detached building next to Building "G". The units are mostly individually owned and used as residences or for vacation rental.

All structures excluding the Resident Manager's and the offices have three floors. Buildings A and E have eleven two-bedroom units. The units have 1106 SF of living area and 308 SF of lanai. Buildings B and E have five one-bed room units and eleven two-bed-room units. One bedroom units are all identical and have 700 SF of living area and 84 SF of Lanai. The two-bedroom units have 1,050 SF of living area and 392 SF of lanai. Building D and E each has eleven one-bedroom units with 700 SF of living area and 84 SF of lanai. Building G is a four-bedroom unit used as the complex's Manager's residence. An additional detached building houses three offices and a laundry room and is located adjacent to building G.

The grounds are well kept and landscaped with lawn, ornamental flowers and palm trees which include a pool, a shower and barbeque pavilion. A site plan showing various facilities of the development is depicted in Figure 2-2.

2.2 Land Use

The site of the development is zoned as "R-3 Residential District" by Maui County. In the West Maui Community Plan, the site is designated as "Single Family" and has a State Land Use "Urban" designation. In 1968, the Kahana Sunset AOAO applied for and obtained a zoning variance for multi-family apartment use for the property.

2.3 Topographic and Geotechnical Features

The existing topography at the project site is defined by graded apartment pads and paved parking areas, developed over a gently sloping land which descends south westerly towards the beach along the Keonenui Bay. The meandering Lower Honoapiilani Road defines the northern and eastern boundary of the property and the elevations along this road bordering the property ranges from 49.9 above Mean Sea Level (MSL) at the northern section of the upper entrance to 47.23 at the southern entrance. The site has a southwesterly slope of about 9 percent.

According to the U.S. Natural Conservation Services (NRCS), the soils in the project area belong to Waiakoa-Keahua- Molokai Association which defines them as *moderately deep, deep, nearly level to moderately steep, well drained soils that have moderately fine textured subsoil*. The soils have a surface layer of dark reddish brown, friable silty clay loam. Substratum is soft, weathered igneous rock. Specifically the site is comprised of three types of soils, namely, beach sand (BS), Kahana Silty Clay (KbC), and rough broken and stony land (rRS).

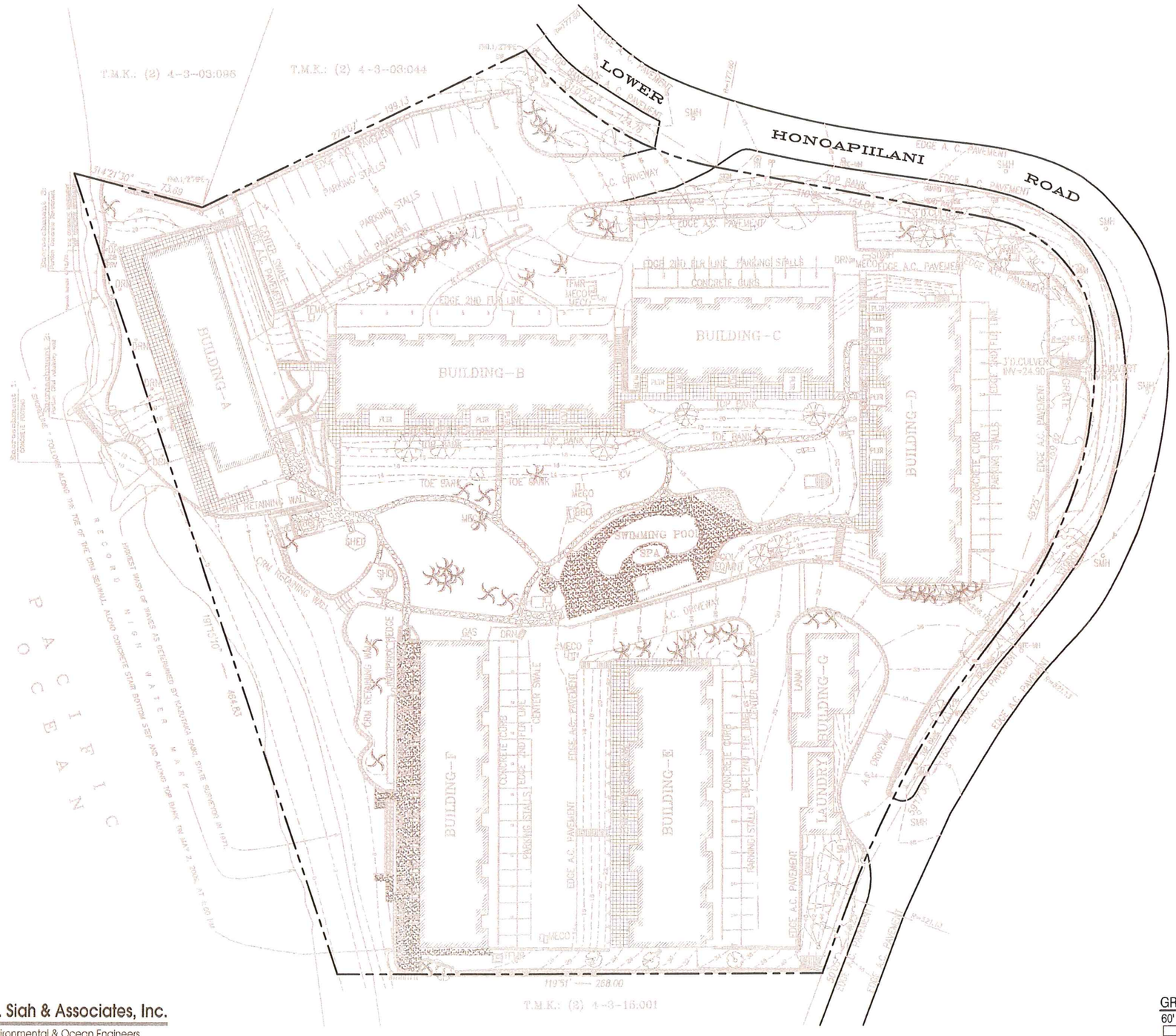

LEGEND:

1. WM = WATER METER
2. WV = WATER VALVE
3. ICV = IRRIGATION CONTROL VALVE
4. SMH = SEWER MANHOLE
5. SDMH = STORM DRAIN MANHOLE
6. LP = LIGHT POST
7. FH = FIRE HYDRANT
8. TFMR = TRANSFORMER
9. PP = POWER POLE
10. MH = MANHOLE
11. DRN =DRAIN
12. IB IRRIGATION BOX
13. UB = UTILITY BOX
14. GW = GUY WIRE

TREE

PALM

PLUMERIA

SIDEWALK

CRM WALL

CONCRETE PAVEMENT

COCONUT

GRAPHIC SCALES:

60' 0 60' 120'

SCALE: 1" = 60'-0"

Marc M. Siah & Associates, Inc.
Consulting Civil . Structural . Environmental & Ocean Engineers
810 S. Beretania Street, Suite 201, Honolulu, Hawaii 96813

FIGURE 2-2 SITE PLAN
SCALE: 1"=80'

A series of nine geotechnical borings were collected by Weideg in 2006, prior to repair of walls fronting A and F buildings. The logs relating to borings no. 1 to no. 6, were taken at locations in front of Building F, both makai and mauka of the new wall, indicate presence of “tan to bluff, moist, loose, and very fine to medium, poorly graded, coralline, slightly silty fill” In contrast, borings no.7 to no. 9, taken makai side of building A, indicate “clayey silt, grey-brown, moist, medium stiff with scattered fine to medium, sub-angular, weathered basaltic gravel” to a depth of 5 feet below the ground. This material is underlain by grey- brown and highly fractured basalt to the bottom of the boring.

2.4 Flora

The open space and grounds encompass two entrance driveways, and six parking lots. The rest of the area is grassed and landscaped with ornamental plants and shrubs and palm trees. There are no endangered species of plants on the property.

SECTION 3.0

DESCRIPTION OF EXISTING INFRASTRUCTURE

Marc M. Siah & Associates, Inc.

Consulting Civil • Structural • Environmental & Ocean Engineers
820 South Beretania Street, Suite 201, Honolulu, Hawaii 96813

SECTION 3.0

DESCRIPTION OF EXISTING INFRASTRUCTURE

This section presents a brief description of existing infrastructure at Kahana Sunset. The information presented in this report are compiled from review of existing plans, site visits and inspection, discussion with AOAO members, and search of public records.

3.1 Site Layout and Roadways

As mentioned in the previous sections, the development consists of six detached, two or three-stories, wood framed apartment buildings encompassing 79 apartments, on a 4.47-acre land parcel. The site also includes a 1,144 SF, single story, detached, four-bedroom structure used as the resident manager's dwelling. An additional 785 SF, structure which was added later adjacent to the manager's residence consists of three offices and a laundry room.

The five apartment buildings are referred to as Buildings A to F, with G as the Manager's residence and L, as the Laundry and offices. Details about the number of units, floor area and other specifics are shown in Table 3-1. The extent of Kahana Sunset construction, in relation to the total land area is about 41 percent. The remainder of the parcel consists of paved roadways and parking areas, planting strips and a central open space encompassing a pool, Jacuzzi, and barbeque and shower pavilion. The paved area which constitutes a little more than 25 percent of the land parcel is comprised of five parking lots covering about 39,700 SF with 103 parking stalls of which 24 stalls are not assigned. Two 24-feet wide driveways and the access roadway cover about 11,500 SF with adequate turn-around and width to accommodate access to emergency vehicles and fire engines. The central open space/recreational area, consists of a 12,000 gallon pool and Jacuzzi, a shower, restroom, barbeque pavilion and lawn area. Originally the central recreational area was separated from the beach by a short flight of stairs situated between a meandering seawall which demarcated edge of the developed land from the beach fronting the property along Keonenui Bay. A significant portion of the wall directly fronting Building F, was severely damaged by storms in recent years and has been removed. The northern section of the wall, immediately makai of the barbeque and shower pavilion, which

has survived the onslaught of the near shore storm waves and currents throughout the years, is badly undercut by wave action and storm surges, and in a state of eminent collapse.

Table 3-1 Specific Details about Various Apartment Units in Kahana Sunset Complex

Building	No. of Units		Floor Area			No. of Parking Stalls	
	1-bedroom	2-bedroom	1-bedroom	2-bedroom	Total	Assigned	Unassigned
A		10		1066	10660	10	8
B	3	11	700	1052	15072	16	
C	3	8	700	1052	10516	11	3
D	3	11	700	1052	13672	14	4
E	5	11	70	1052	15072	16	2
F		12		1066	12792	12	7
G	1, 4-bedroom Unit		1144		1144		
L	3 offices and a Laundry		780		780		

In order to address the failure of the retaining wall fronting the BBQ stand, the Kahana Sunset AOAO, has commissioned preparation of a project Master Plan which proposes repair and modifications to existing protective seawall, and removal of non-complying structures on the property. The AOAO is also, in the process of applying for a shoreline setback variance which is necessary to allow the proposed construction work.

3.2 Water System

The existing water system at Kahana Sunset consists of a 4-inch lateral which supplies the development form the existing 12-inch transmission line running along the makai lane of the Lower Honoapiilani Road. As shown in Figure 3-1, the 4-inch lateral runs along the lower driveway and branches into a network of smaller size pipes, ranging from 4 to 3, 2 ½, 2, and ¾ inch laterals feeding various buildings and points of demand. There are two fire hydrants along the property line in L. Honoapiilani Road Right-of-Way. The first one is located about 60 feet north of the lower driveway, and the second hydrant is located close to the upper driveway and along the roadway shoulder. There is no information regarding the conditions of the existing

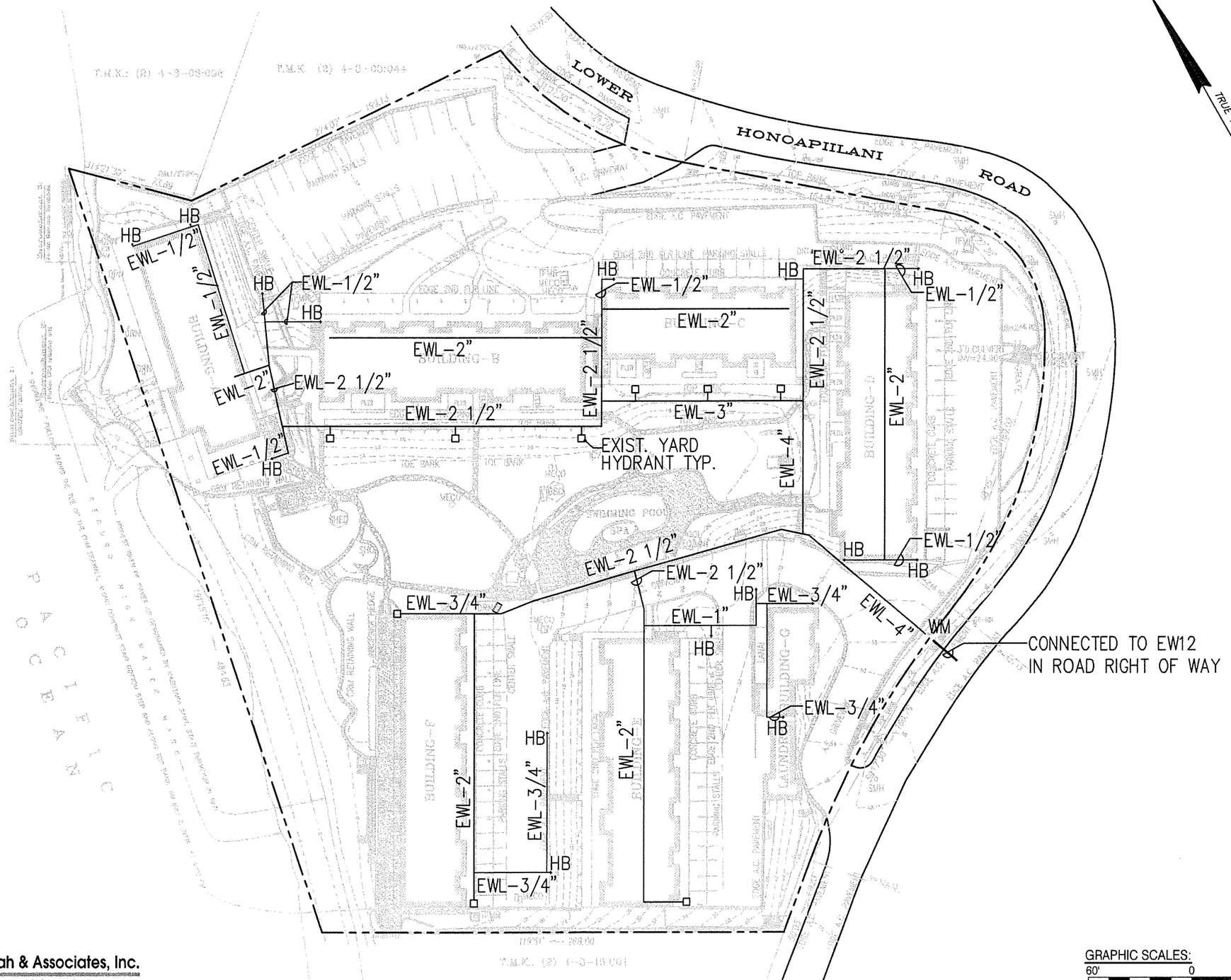

Marc M. Siah & Associates, Inc.
Consulting Civil . Structural . Environmental & Ocean Engineers
810 S. Beretania Street, Suite 201, Honolulu, Hawaii 96813

FIGURE 3-1 EXISTING WATER SYSTEM AT KAHANA SUNSET
SCALE: 1"=60'

GRAPHIC SCALES:
60' 0 60' 120'
SCALE: 1" = 60'-0"

water system at Kahana Sunset. It suffices to say that there is no report of any leaks, or complains about low water pressures from the residents.

Figure 3-2 Water Consumption at Kahana Sunset

Date	Consumption (Gallons X 1000)	No. of Days	Consumption (gallons per day)
12/15/2010	1143	61	18738
2/12/2011	1224	61	20066
4/14/2011	1318	59	22339
6/14/2011	1126	61	18459
8/15/2011	1465	62	23629
10/14/2011	1244	60	20733
12/14/2011	1078	61	17672
Average Daily Consumption			20231

A review of the actual water consumption based on billings of the Maui Department of Water Supply for 2011, as summarized in Table 3-2, indicate that actual water consumption in the development was much lower than the design demands. Accordingly, daily water consumption at Kahana Sunset, during 2011 ranged from 17,672 to 23,629 gallons per day with the average consumption of 20,231 gallons per day. The Water System Standards, also enumerate, the requirements for fire flow at Kahana Sunset to be 2000 gallons per minute for two hours duration.

3.3 Wastewater System

Wastewater system at Kahana Sunset has undergone major modifications and reconstruction since the inception of the development. Originally, the sewage collection and disposal system consisted of individual “Cavitette” wastewater treatment and disposal dry wells for each building. Figure 3-2, shows the location and configuration of this system which is no longer in use and abandoned. Cavitette, refers to a commercial brand of aerobic waste treatment system in which wastewater is exposed to oxygen (air) in an enclosed chamber, to allow the micro-

organisms present in the waste stream to breakdown and treat the waste. The result of this breakdown and treatment is the settling of the bio-mass which can then be removed from the settling tank and transported for off-site disposal. The effluent from the process, however, is diverted into an injection/dry well for final disposal. As shown in Figure 3-2, wastewater from each building is collected by a 4-inch sewer line which delivers is to an individual Cavitette system. The Cavitette at Kahana Sunset consisted of multi chambers units, located downstream of a pre-loader where air was introduced to waste stream. The waste would then enter four settling chambers for further treatment. Effluent from each multi-chamber Cavitette wastewater treatment system for each building was then conveyed to one or two 60-feet deep disposal wells located adjacent to the treatment system.

Sometimes in the 80s, this wastewater treatment system was abandoned on-site. The new system connects the existing 4-inch sewer laterals collecting wastewater from each building, to new sewer laterals which extend to a wet well and pumping station located in the central open yard adjacent to the pool. However, no information about the sizes, alignments and slopes of these laterals are available.

The 4 feet by 6 feet wet well is about 13 feet deep and is equipped with two “Myers” submersible, constant speed solid handling pumps. Each pump is equipped with a 5 Horse Power, 750 RPM, constant speed electric motor capable of pumping up to 720 gallons per minute. The system has a hundred percent redundancy, meaning that during normal operation one pump is on line, while the second is on standby to be used during emergency situations. The wet well is equipped with level switches that direct the intermittent on and off cycles of the pumping unit in operation. The wastewater is thus pumped via a new 4-inch sewer force main from the wet well to an existing sewer manhole in the Lower Honoapiilani Road Right-of-Way, in the vicinity of the lower entrance/driveway to Kahana Sunset. An existing 18-inch sewer trunk line along the Lower Honoapiilani Road, conveys the waste stream to the West Maui Wastewater Treatment Plant for final treatment and disposal. There is no as-built construction plans for the sewer system in Kahana Sunset.

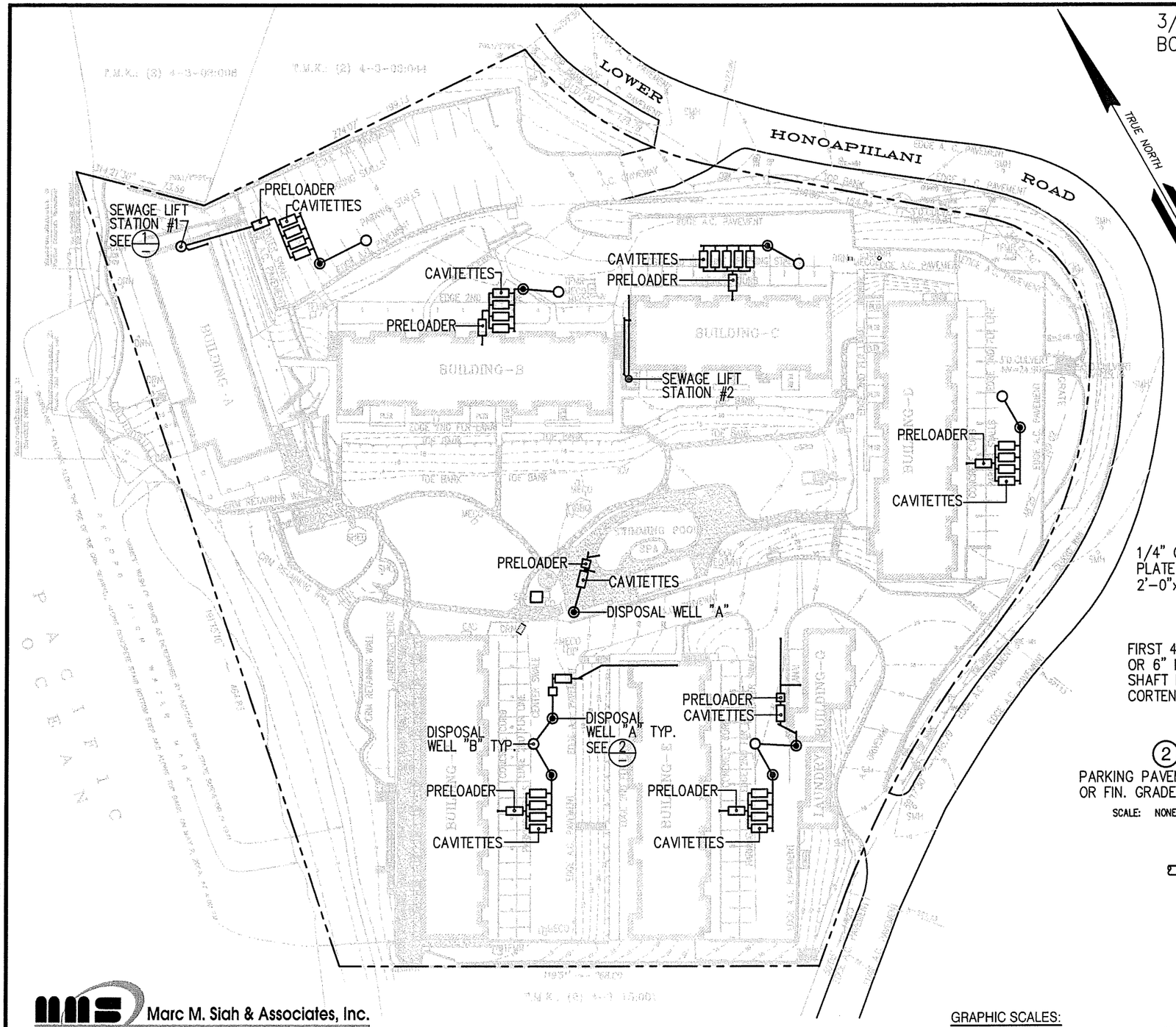

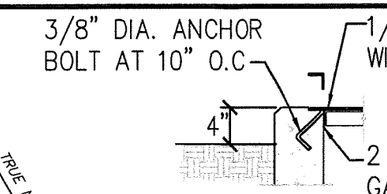

DISPOSAL WELL "A" DET.
SCALE: NONE

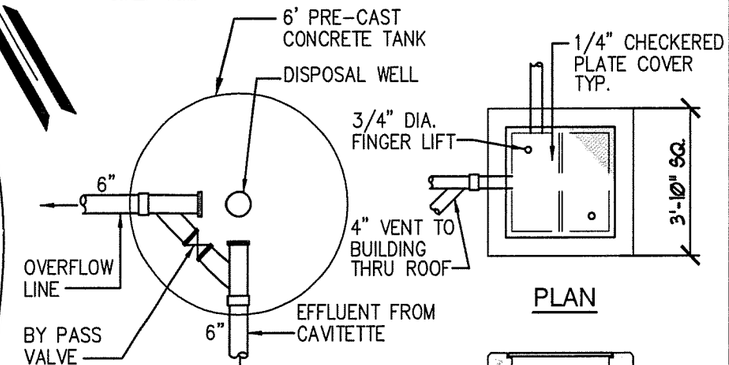

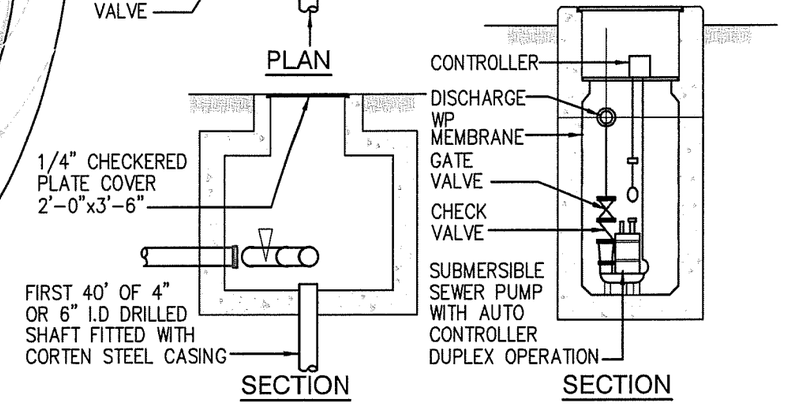

2 DISPOSAL WELL "A" DET.

1 SEWAGE LIFT STATION DET.

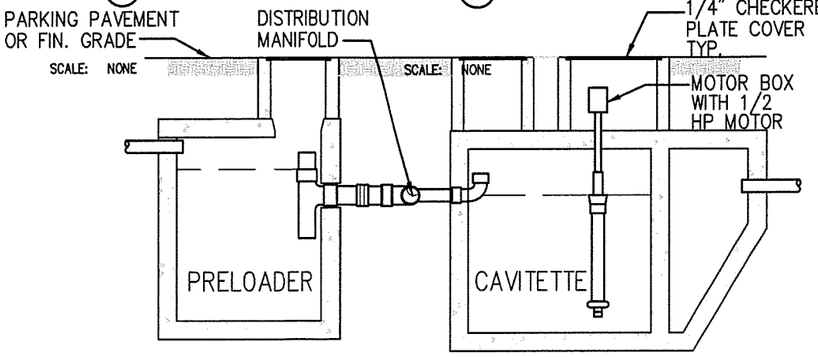

CAVITETTE SECTION
SCALE: NONE

Marc M. Siah & Associates, Inc.
Consulting Civil . Structural . Environmental & Ocean Engineers
810 S. Beretania Street, Suite 201, Honolulu, Hawaii 96813

FIGURE 3-2 ABANDONED WASTEWATER INFRUSTRUCTURE
SCALE: 1"=60'

GRAPHIC SCALES:
60' 0 60' 120'
SCALE: 1" = 60'-0"

A schematic layout and components of the Kahana Sewer System infrastructure, developed based on information from the owner is depicted in Figure 3-3.

3.4 Storm Drainage System

The existing drainage infrastructure on the property consists of drain lines of various sizes, drain inlets, drywells, storm drain manholes, and cobble-lined drainage channels which are located at strategic locations throughout the development to intercept, collect and convey storm runoff by means of a 36-inch outfall and several other smaller drainage pipes into the Keonenui Bay.

In general, storm runoff generated in open planted areas with bare soil mostly infiltrate into the ground. Over flows from these areas, join the overland sheet flow in the central open and grassed yard, the flows from roofs' down spouts, at times channelized or sheet flow on the paved roadways and parking, are all directed towards various inlets and intake structures, constructed within the property boundaries, before they ultimately discharge into the bay via the 36-inch outfall. Surface flow patterns and various inlets and other drainage facilities and details at project site, are depicted in Figure 3-4 and Figure 3-5. In summary and as indicated the storm water infrastructure includes, eight drain lines of various sizes ranging from 6-inch to 36-inch, four storm drain manholes, one intake/dry well, two 24-inch wide rectangular cobbled open channels, several swales collecting and diverting roof runoffs to various inlets, more than 12 drain inlets and a series of 4-inch drain pipes which mostly drain the lawn/lanai areas makai of Buildings A.

A detailed drainage report for Kahana Sunset prepared by Marc M. Siah & Associates, Inc., dated April 2012, quantifies total storm runoff generated on Kahana Sunset Property at 11.53 cfs. In addition to this flow, two other sources of off-site storm flow feed into the Kahana Sunset storm drain system. They include flows from portions of the Lower Honoapiilani Road Right-of-Way in the vicinity of the Kahana Sunset, plus storm runoff overflows from the two

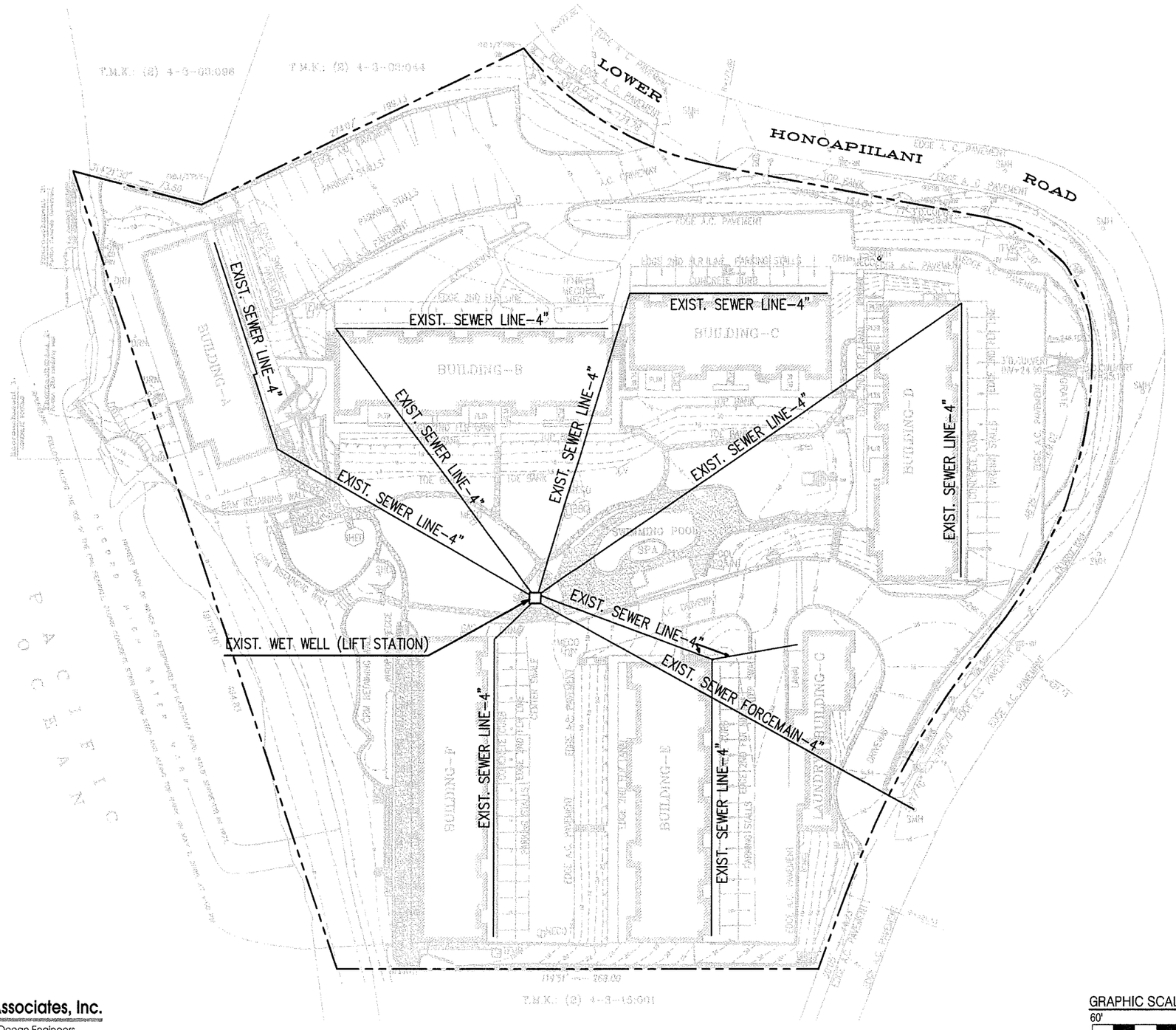

Marc M. Siah & Associates, Inc.
Consulting Civil . Structural . Environmental & Ocean Engineers
810 S. Beretania Street, Suite 201, Honolulu, Hawaii 96813

FIGURE 3-3 EXISTING SEWER SYSTEM
SCALE: 1"=60'

GRAPHIC SCALES:
60' 0 60' 120'
SCALE: 1" = 60'-0"

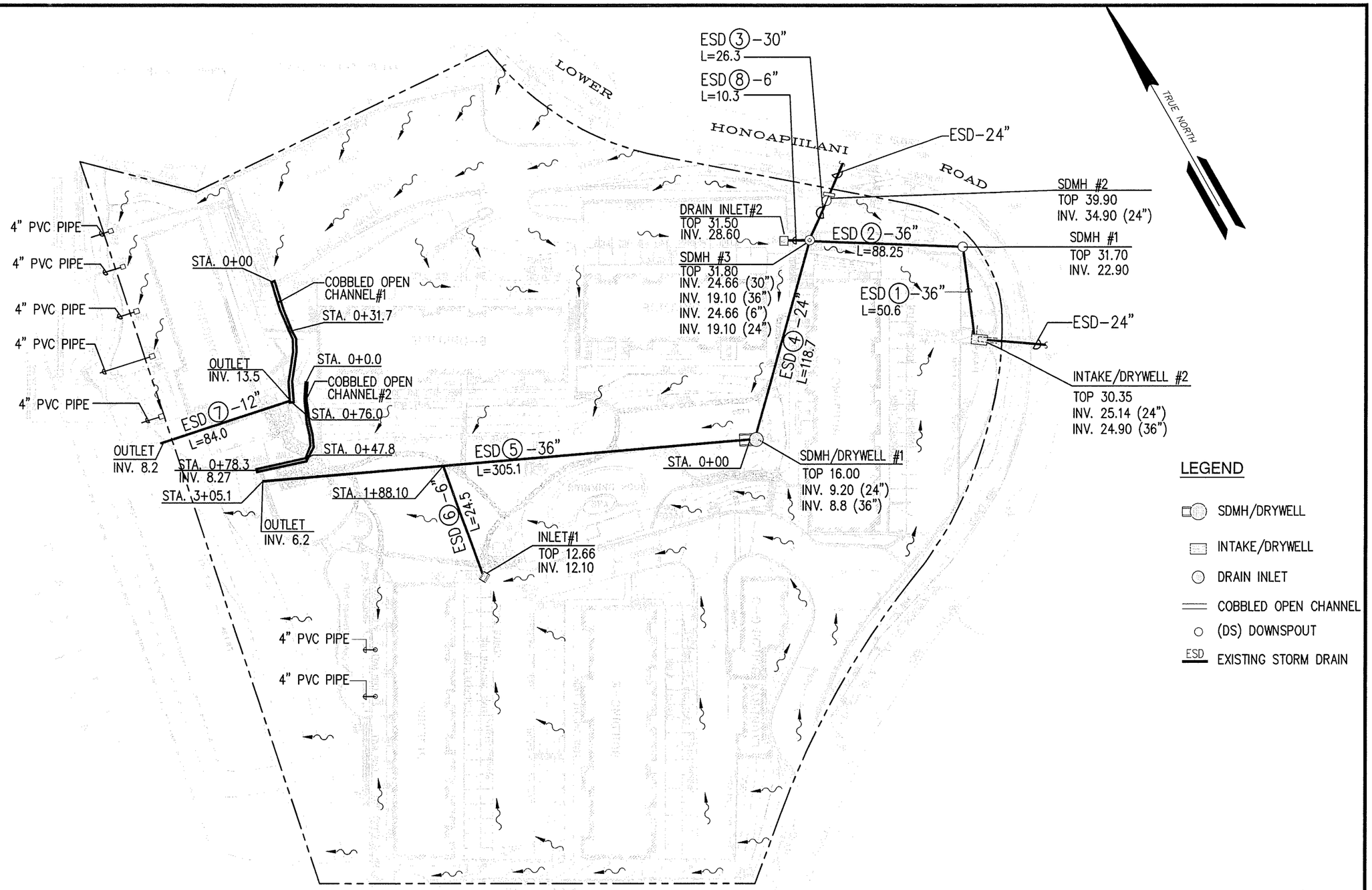

Marc M. Siah & Associates, Inc.
Consulting Civil , Structural , Environmental & Ocean Engineers
810 S. Beretania Street, Suite 201, Honolulu, Hawaii 96813

FIGURE 3-4 EXISTING STORM DRAINAGE INFRASTRUCTURE AT KAHANA SUNSET
SCALE: 1"=80'

GRAPHIC SCALES:
60' 0 60' 120'
SCALE: 1" = 60'-0"

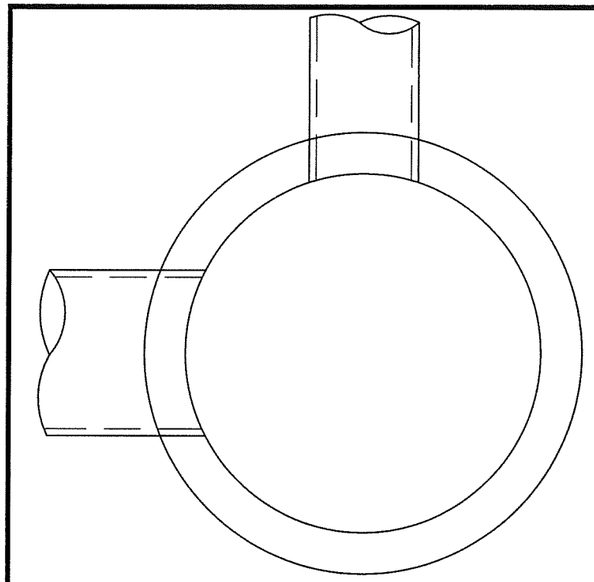

PLAN-SDMH/DRYWELL #1
SCALE: 3/8"=1'-0"

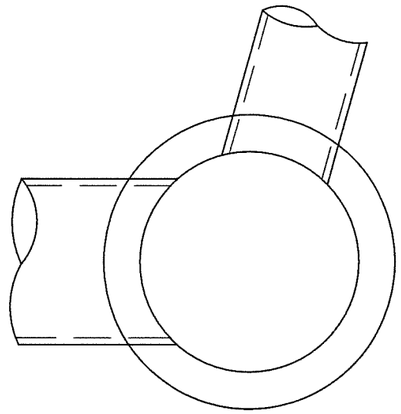

PLAN-SDMH/DRYWELL #2
SCALE: 3/8"=1'-0"

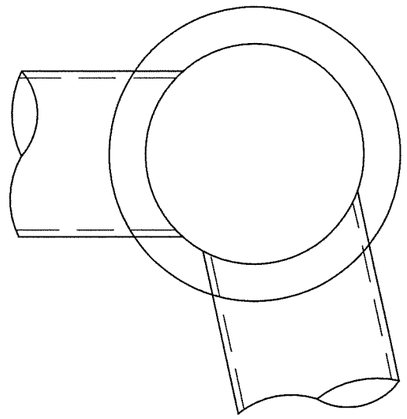

PLAN-SDMH #1
SCALE: 3/8"=1'-0"

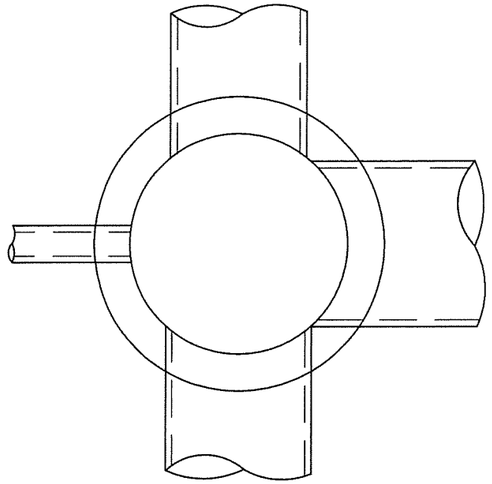

PLAN-SDMH #3
SCALE: 3/8"=1'-0"

SECTION-SDMH/DRYWELL #1
SCALE: 3/8"=1'-0"

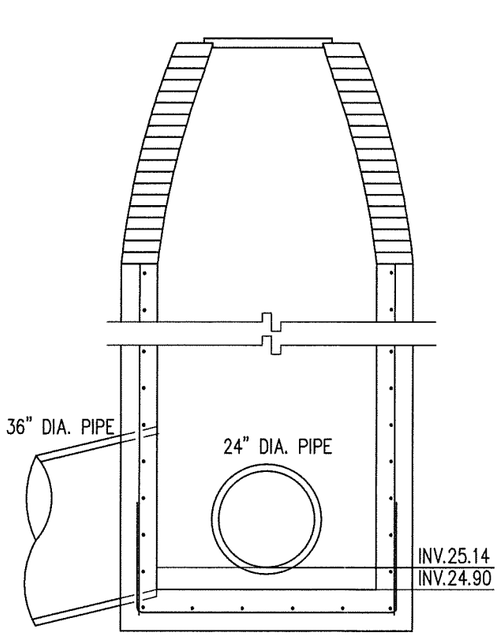

SECTION-INTAKE/DRYWELL #2
SCALE: 3/8"=1'-0"

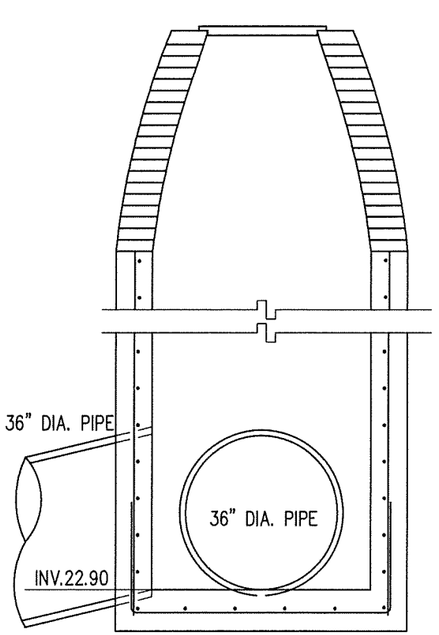

SECTION-SDMH #1
SCALE: 3/8"=1'-0"

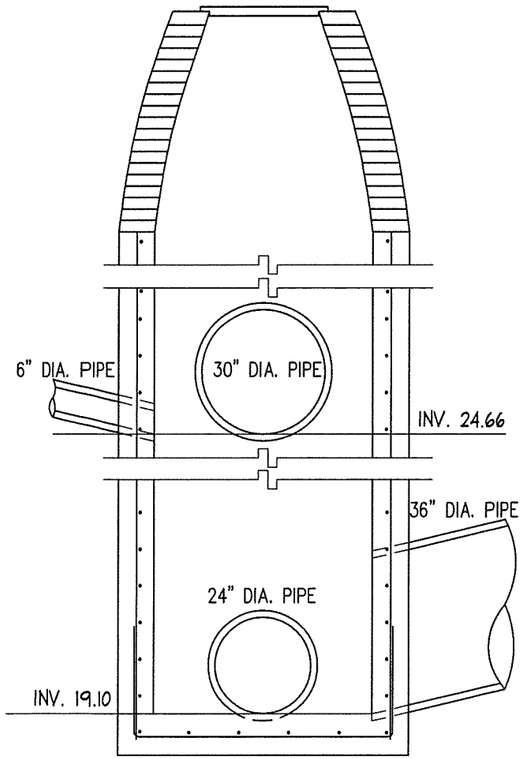

SECTION-SDMH #3
SCALE: 3/8"=1'-0"

Marc M. Siah & Associates, Inc.
Consulting Civil . Structural . Environmental & Ocean Engineers
810 S. Beretania Street, Suite 201, Honolulu, Hawaii 96813

FIGURE 3-5 STORM DRAIN SYSTEM DETAILS AT KAHANA SUNSET
SCALE: AS NOTED

retention/detention basins at Napili Villas. These basins were originally constructed with the capacity to contain and hold storm runoff volumes generated on the entire Napili Villas Development during 10-year design storms. During severe storms and emergencies, however, a spillway system would allow overflow from these two retention/detention basins to flow via a 24-inch storm drain/culvert traversing the Lower Honoapiilani Road, into a dry-well/intake structure at Kahana Sunset. In short, extraneous off-site storm runoff entering the Kahana Sunset' storm drain infrastructure, include 9.12 cfs from County's L. Honoapiilani Road Right-of-Way, and unspecified quantity from the Napili Villas and makai properties. In an agreement between the County and Kahana Sunset AOAO, this quantity has been agreed to a maximum of 44 cfs as dictated by the capacity of the existing 24-inch culvert. In other words, the total off-site storm runoff entering into the Kahana Sunset drainage system can reach as high as 53.12 cfs. Consequently, the total combined potential runoff from Kahana sunset, including off-site flows, discharging into the Keonenui Bay via the existing 36-inch outfall is 64.65 cfs.

As detailed in the Preliminary Drainage Report for Kahana Sunset, the existing storm drain inlets in the Lower Honoapiilani Roadway right-of-way, in the vicinity of the Kahana Sunset Development, and the allegedly cracked 24-inch culvert which conveys storm water overflows from Napili Villas into the Kahana Sunset's system, are in a state of disrepair. The two roadway inlets are not adequately maintained to efficiently handle storm runoff from the road right-of-way. Stray and unmitigated roadway storm runoff sheet flows overland and enters Kahana Sunset, which at times, has caused localized erosion and property damage. According to the County of Maui Department of Public Works, the existing roadway storm drainage infrastructure, are to be upgraded in near future as part of the Lower Honoapiilani Road Improvements, Phase 4, Project.

3.5 Electric, Telephone and Cable TV Systems

Electric power, telephone and cable TV services are supplied to Kahana Sunset by Maui Electric Company, MECO, Hawaiian Telephone, and Oceanic Cable companies, respectively. A 4.16 KV high voltage, overhead MECO power line, which runs along Lower Honoapiilani Road supplies the development with 60 Hz, 120 Volts single phase electricity. The power is transmitted and distributed throughout the development by means of directly buried or concrete jacketed ducts to transformers which then feed individual buildings and other points of demand throughout the development. Telephone and cable TV service lines are also bundled through the same ducting system. An electrical site plan indicating the power and lighting as well as telephone and cable service, is presented in Figure 3-6. A 35 KW switchable 1 phase/3 phase, 60 Hz, electric generator with rated capacity of 43 kVA, which runs on propane, is used as the emergency generator on standby to power the sewer pumps, during emergency power outages.

3.6 Propane Tanks

There are three propane tanks on-site in Kahana Sunset. They include a 124-gallons tank located at the north end of Building F, a 1 228-gallons tank situated adjacent to the offices and laundry facility, and a 288-gallons tank located adjacent to the pool and the sewage pumping station. The first two tanks are used for laundry operation, whereas the last tank is used for heating the pool and the Jacuzzi, gas stove at the barbeque pavilion, as well as running the emergency generator for sewage pumping station during power failures and other electrical emergencies.

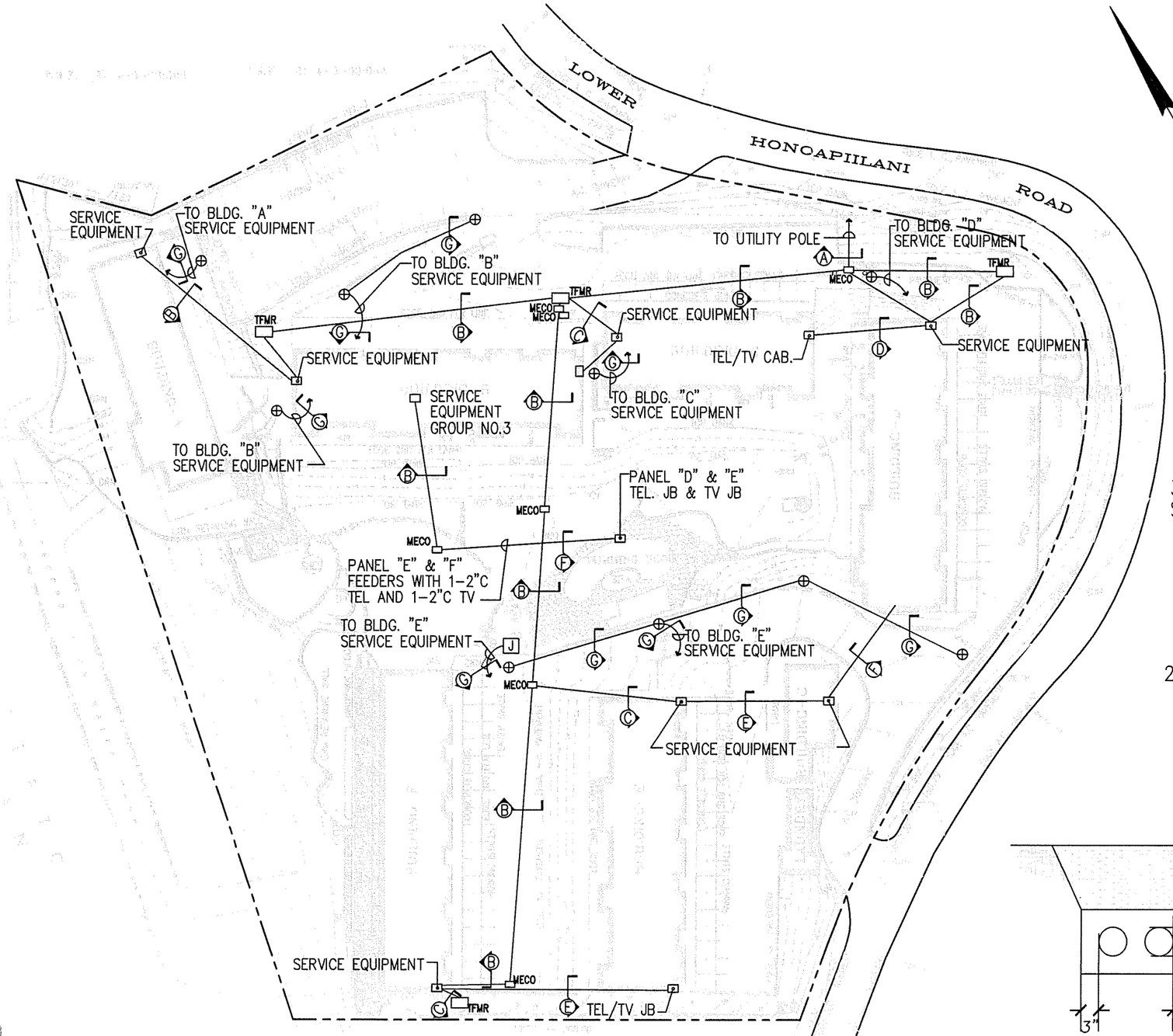

GRAPHIC SCALES:

60' 0 60' 120'

SCALE: 1" = 60'-0"

TRUE NORTH

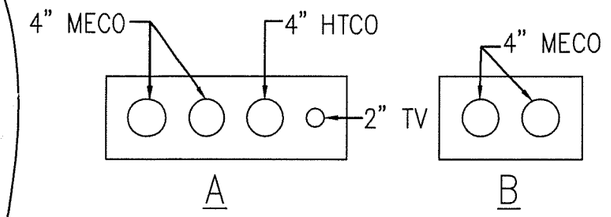

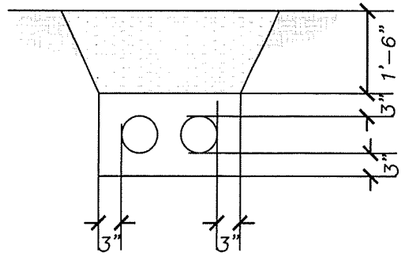

TYPICAL CONCRETE JACKETED DUCT SECTION

SCALE: 3/8"=1'-0"

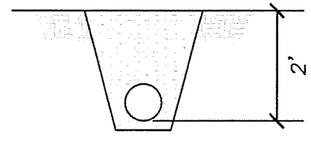

TYPICAL DIRECT BURIED DUCT SECTION

SCALE: 3/8"=1'-0"

Marc M. Siah & Associates, Inc.
Consulting Civil . Structural . Environmental & Ocean Engineers
810 S. Beretania Street, Suite 201, Honolulu, Hawaii 96813

FIGURE 3-6 ELECTRIC, TELEPHONE & CABLE TV SYSTEMS AT KAHANA SUNSET

SCALE: 1"=60'

SECTION 4.0

INFRASTRUCTURE ADEQUACY EVALUATION

Marc M. Siah & Associates, Inc.

Consulting Civil • Structural • Environmental & Ocean Engineers
820 South Beretania Street, Suite 201, Honolulu, Hawaii 96813

SECTION 4.0

INFRASTRUCTURE ADEQUACY EVALUATION

In this section adequacy of the existing infrastructure at Kahana Sunset Condominium Complex is evaluated. The evaluation is based on demand estimates for various utilities presented in Appendix A, as well as head loss calculations, system head, and pump performance curves presented in Appendix B.

4.1 Potable Water System

Based on the domestic water consumption guidelines, promulgated by the State of Hawaii Water Systems Standards, potable water for Kahana Sunset is estimated from as high as 560 gallons per day per apartment unit for residential areas, to as low as 350 gallons per day for resorts. In other words daily potable water demands at Kahana Sunset can range from 28,000 to 44,800 gallons per day. However, review of the actual water consumption based on billings of the Maui Department of Water Supply for 2011, as summarized in Table 3-2, indicates that actual water consumption in the development was much lower than the design demands. Accordingly, water consumption at Kahana Sunset, during 2011 ranged from 17,672 to 23,629 gallons per day with an average rate of 20,231 gallons per day.

The Water System Standards, Table 100-19, presented in Appendix A, also enumerate the requirements for fire flow at Kahana Sunset to be 2000 gallons per minute for duration of two hours.

Based on review of maintenance records and interviews with residents, there is neither an indication of major leaks in the system, nor lack of adequate pressures. However, pressure tests must be conducted on existing fire hydrants at Kahana Sunset to ensure availability of 2000 gallons per minute of fire flow for two hours duration while maintaining 40 PSI pressure at critical fire hydrant.

Figure 3-2 Water Consumption at Kahana Sunset

Date	Consumption (Gallons X 1000)	No. of Days	Consumption (gallons per day)
12/15/2010	1143	61	18738
2/12/2011	1224	61	20066
4/14/2011	1318	59	22339
6/14/2011	1126	61	18459
8/15/2011	1465	62	23629
10/14/2011	1244	60	20733
12/14/2011	1078	61	17672
Average Daily Consumption			20231

4.2 Waste Water System

Based on the County of Maui Wastewater Flow Standards, of 255 gallons per unit per day for apartment complexes, the estimated wastewater flow from the Kahana Sunset Apartments only, is about 20,400 gallons per day. The waste stream from the laundry which houses four washing and dryer machines, is estimated at 600 gallons per day. The total wastewater from the development is about 21,000 gallons per day. A break-down of daily average wastewater flow from various buildings in the development is presented in Table 4-1.

As mentioned in preceding section, the wastewater collected from various building within the development flows by gravity via a series of sewer laterals, from various buildings on the grounds, to a sewage wet well located in the open central area adjacent to the pool. As mentioned earlier in this report, there are no as-built drawings available for these lines. Therefore, since the sizes and slopes of these laterals are not known, adequacy of these sewer laterals cannot be evaluated.

Table 4-1 Wastewater Generation Rates at Various Buildings in Kahana Sunset

Building	Average Daily Wastewater Flow (gallons per day)
Building A	2550
Building B	4080
Building C	2805
Building D	3570
Building E	4080
Building F	3060
Building G	255
Laundry and Offices	600
Total	21,000

The wet well is 4 by 6 feet in cross section with a depth of 13 feet, and houses two 5 HP, 1750 RPM constant speed pumps. The pump controls and relays switches are all contained in a NEMA enclosure installed on the side wall of the wet well. Only one of the two pumps is on duty at any given time. The pumping unit on duty, intermittently cycles off and on several times a day depending on level switch settings and the rate of wastewater flow into the wet well. The system head curve, which represents the resistance of the piping system to pumping process, developed for the existing pump is shown in Figure 4-2. Accordingly the total static head on the pumping unit is 28.40- feet.

A review of pump performance curve shown in Appendix B, indicates that the pumping unit on duty, could pump between 300 to 375 gallons per minute at 40 to 45 feet of head with an efficiency of 60to 62 percent. On average, the unit delivers about 350 gallons per minute of raw wastewater to the sewer manhole in L. Honoapiilani Road, at 60 percent efficiency. As the calculations in Appendix B, show, assuming an 8 feet range set on the level switches in the wet

well, the pump would cycle between off and on, fifteen times over 24 hours, to handle the average daily wastewater flow generated on-site. Each on-cycle would last a little more than 4 minutes.

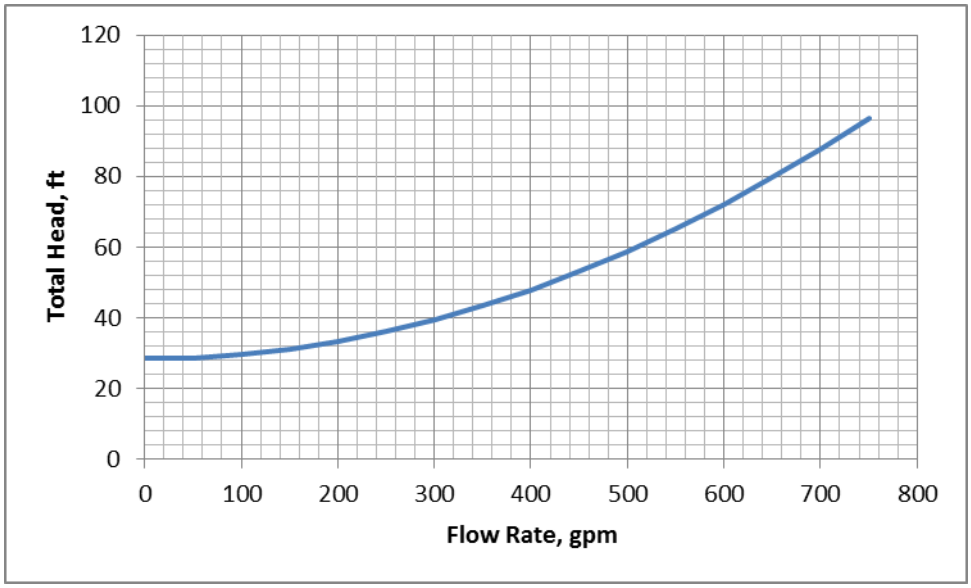

Figure 4-1 System Head Curve for pumping unit at Kahana Sunset

4.3 Electric, Telephone and Cable TV Systems

As mentioned in the preceding section, electric power, telephone and cable TV services are supplied to Kahana Sunset by Maui Electric Company, MECO, Hawaiian Telephone, and Oceanic Cable companies, respectively. A 4.16 kV high voltage, overhead MECO power line, which runs along Lower Honoapiilani Road supplies the development with 60 Hz, 120 Volts single phase electricity. The power is transmitted and distributed throughout the development by means of directly buried or concrete jacketed ducts to transformers which then feed individual buildings and other points of demand throughout the development.

Electrical demand, calculations for Kahana Sunset development is presented in Appendix A. Accordingly, the total electrical load at the project site is estimated at 1,159 kVA. A break-down of various electrical loads throughout the development is presented in Table 4-3. The existing

power distribution and lighting system, over the years, has proven to adequately supply this demand during normal and emergency conditions.

Telephone and cable TV service lines, at Kahana Sunset are also bundled through the same ducting system as the power line supplying every unit in the development.

Table 4-2 Estimates of Various Electrical Loads in Kahana Sunset

Building Designation	No. of Units	Electrical Load (VA)
Building A	10, 2-bedroom Units	139,613
Building B	11, 2-bedroom & 5, 1-bedroom Units	219,885
Building C	8, 2-bedroom & 3, 1-bedroom Units	151,525
Building D	11, 2-bedroom & 3, 1-bedroom Units	193,513
Building E	11, 2-bedroom & 5, 1-bedroom Units	219,885
Building F	12, 2-bedroom Units	167,536
Building G	1, 4-bedroom Unit	13,629
Laundry	3 Offices & Laundry	11,619
Total	80 Apartment Units, 3 offices & Laundry	1,117,270

4.4 Storm Drain System

Kahana Sunset's Strom Drain infrastructure is evaluated and discussed in details in the Preliminary Drainage Report prepared By Marc M. Siah & Associates, Inc. dated April 2012. In the following paragraphs only a synopsis of this system is presented. For detailed discussion of the system the reader is referred to the latter report for additional information. Accordingly, the total runoff generated by 10-year design storm, on the Kahana Sunset property was estimated at 11.53 cfs. Overall drainage concept in the development of Kahana Sunset is based on maximizing absorption of runoff on site by means of providing permeable surfaces such as lawn, and planting patches with bare soil, and drywells. The balance of surface runoff, not

directly absorbed by ground surface, is directed and conveyed by surface sheet flow, swales, open channels, drain inlets and drainage pipes, intro the Keonenui Bay. As discussed in the Preliminary Drainage Report, storm runoff from off-site mauka properties as well as some flow generated on Lower Honoapiilani Road Right-of-Way, enter into the Kahana Sunset drainage infrastructure prior to disposal via a 36-inch outfall into the Bay. The contribution of Kahana Sunset storm flow to the total runoff discharge into the bay is 11.53 cfs. In contrast, off-site flow traversing the development, can reach as high as 53.12 cfs. In other words, storm runoff discharge from Kahana Sunset could be as low as 17.8% of total discharge into the bay.

Referring to the Strom drainage infrastructure plan presented in the preceding section, the Preliminary Drainage Report concludes that all drain pipes with the exception of Drain line # 6, in Kahana Sunset Drainage system, are adequate to conveys potential runoff flows from their tributary areas. However, storm drain line No. 6, which conveys storm runoff collected by the inlet # 1, located at the north east corner of Building F, is inadequate. The calculations further confirms the observation by the residents of Kahana Sunset Condominium, that during severe storm events, the inlet # 1, over flows and floods the area. Based on these calculations replacing, the existing 6-inch line with an 8-inch drain line will alleviate the flooding in the area.

The 24-inch storm drain line, SDL #4, which connects SDMH # 3 located in the paved area between Buildings C and D to the main SDMH/ Dry Well # 1, in the central open space, although has the capacity to convey the potential runoff form it's contributory areas, it creates a bottle neck in the system. During major storm events, when contribution from Napili Villas' development and runoff from roadway right-of-way are the highest, this storm drain flows 70.56 percent full. The velocities in this line would reach as high as 23.26 fps. The Hydraulic Grade Line, HGL, calculations show that the 24 inch line causes water levels in the upstream manhole, SDMH # 2, to rise to 26.68 feet level, merely less than five feet below the ground surface. The impact of high HGL reaches even to Intake/Dry Well # 2. In other words, during a very severe storm when, off-site flows reaching Kahana Sunset may become even larger than the anticipated 53.12 cfs, both SDMH # 2, and the Intake/Dry Well # 2, may overflow causing

material damage to the development. Replacing this segment of drain line with a larger 30-inch or 36-inch line, would reduce flow velocities and alleviate hydraulic inadequacy of the system during sever events. It would further ensure that system will have excess capacity for conveyance of unanticipated and unusual off-site runoff volumes. The hydraulic calculations also indicate that the two cobble-lined open channels are more than adequate for conveyance of storm waters from their respective tributary areas.

4.5 Proposed Improvements

As mentioned in the previous sections, the exposure of Kahana Sunset to north swells and trade wind waves which undergo significant transformation as they approach the land and enter the Keonenui bay, causes recurring beach erosion and accretion with occasional and at times severe structural damage to foundations and footings of existing protective coastal fortifications at the property. Over the past few years, the Kahana Sunset AOAO has had to deal with reconstruction and repair of the existing protective seawalls under emergency conditions. At the present time, in order to address the failure of the retaining wall fronting the BBQ pavilion/shower and to construct additional modifications to the protective seawalls, the Kahana Sunset AOAO, has commissioned preparation of a project Master Plan which delineates the scope and extent of repair and modifications to existing protective seawalls, and removal of non-complying structures on the property.

The proposed master plan calls for removal of the failing sea wall fronting the barbeque pavilion. Two new flanking walls enveloping a semi-circular stair set underlain by a curtain wall will replace the failing sea wall. The location and the configuration of the proposed improvements are based on special attention to and compliance with setback requirements and concerns. All other structures seaward of this new scheme are to be demolished and removed. The proposed site improvements are delineated and presented in Figure 4-2.

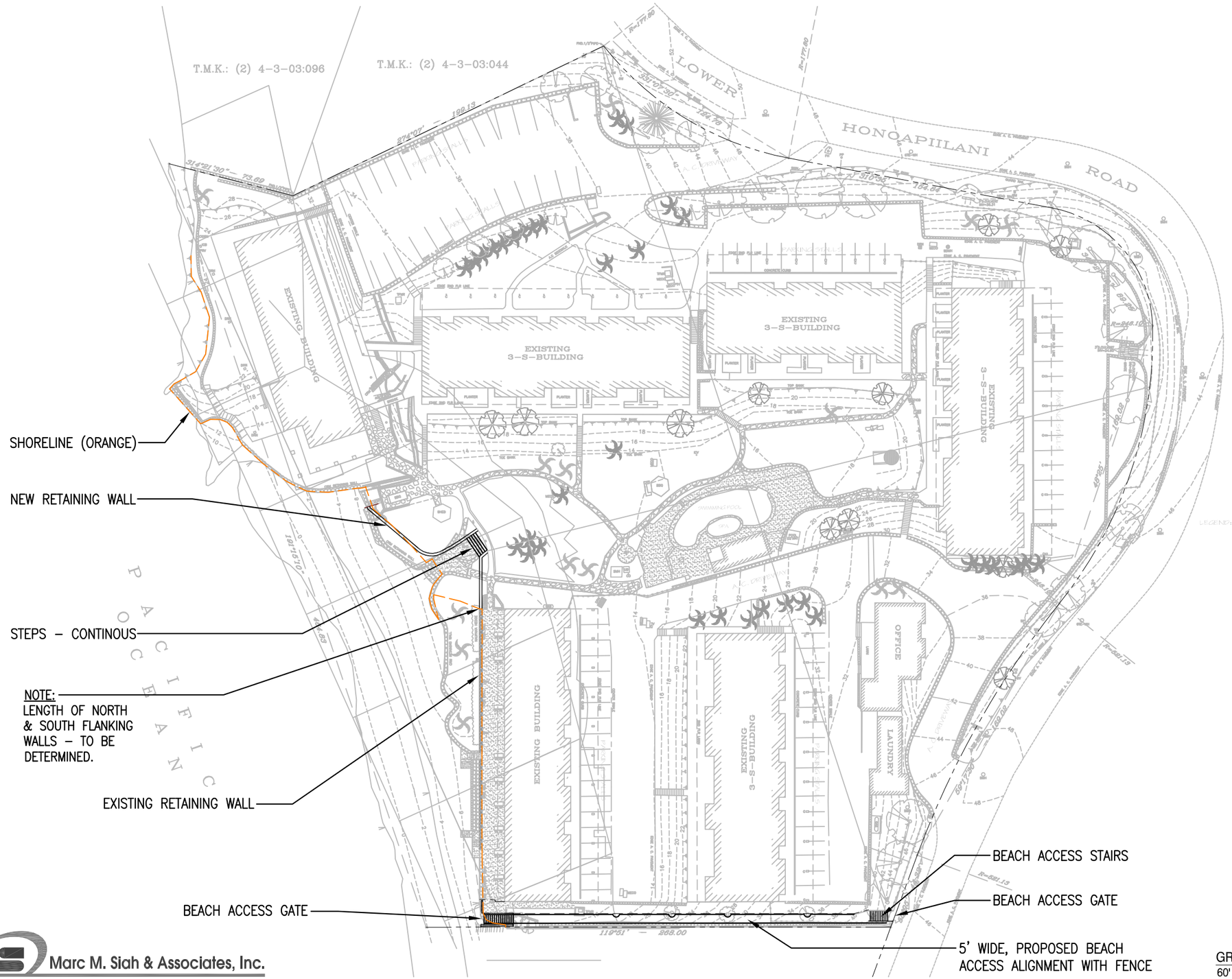

LEGEND:

1. WM = WATER METER
2. WV = WATER VALVE
3. ICV = IRRIGATION CONTROL VALVE
4. SMH = SEWER MANHOLE
5. SDMH = STORM DRAIN MANHOLE
6. LP = LIGHT POST
7. FH = FIRE HYDRANT
8. TFMR = TRANSFORMER
9. PP = POWER POLE
10. MH = MANHOLE
11. DRN =DRAIN
12. IB IRRIGATION BOX
13. UB = UTILITY BOX
14. GW = GUY WIRE

TREE

PALM

PLUMERIA

SIDEWALK

CRM WALL

CONCRETE PAVEMENT

COCONUT

Marc M. Siah & Associates, Inc.
Consulting Civil . Structural . Environmental & Ocean Engineers
810 S. Beretania Street, Suite 201, Honolulu, Hawaii 96813

GRAPHIC SCALES:
60' 0 60' 120'
SCALE: 1" = 60'-0"

FIGURE 4-2 PROPOSED IMPROVEMENTS FOR KAHANA SUNSET

Concurrent with the master plan, the AOAO is also, in the process of applying for a Shoreline Setback Variance (SSV) and Special Management Area (SMA) Use Permit. The SSV is necessary to allow additional construction work on the failing seawall and other planned modifications and additions to protective seawalls and coastal structures within the Shoreline Setback Area. In compliance with the State environmental review process, the Kahana Sunset AOAO is also preparing an Environmental Assessment for these modifications and renovations.

4.6 Conclusions and Recommendations

Conditions and capacities of existing infrastructure in Kahana Sunset, reviewed in this report, lead to the conclusion that overall, and despite the relative old age of the facilities, they are mostly adequate and in good operating conditions. The performance of the Kahana Sunset AOAO, in up keep and maintenance of the facilities are commendable. In the following paragraphs, a number of suggestions and recommendation are offered for improving the conditions and alleviating some shortcomings:

Roadways and Parking Lots – All Paved surfaces along the driveways and parking areas are in good condition, with adequate lighting, and no vehicular or visibility obstruction. Suggested improvements may include:

a. Provide new marking for parking stalls and roadway centerline;
b. Designate by marking at least one stall for handicap parking in each parking area;
c. Designate specific parking area for loading and unloading of delivery trucks;
d. Install signage warning for slippery road when raining along the lower driveway.

Water System - The system is adequate to supply the water demand at the development and no shortcomings or defects were observed in the system. There are no records of major system leaks or low water pressures at the development. It is recommended, however, that arrangement be made with the County Fire Department for testing of all hydrants on the

grounds including the two in the L. Honoapiilani Right-of-Way, to ensure availability of adequate water flow and pressure for fire-fighting purposes.

Wastewater System – As mentioned in this report there is no as-built drawings for wastewater system at Kahana Sunset. The evaluation is based on site visits and information compiled from the owners' representatives and excludes adequacy calculations for sewer laterals connecting various buildings to the wet well. The following recommendations are, therefore, offered:

a. Determine the sizes, alignment, and the slopes of all existing sewer from their connection points at each building to their termini at the sewer wet well and pumping station;
b. Inspect and determine the dimensions, depth, and invert of the wet well;
c. Verify the level switch settings and control in the wet well;
d. Determine invert of laterals discharging into the wet well;
e. Prepare a set of as-built drawings for wastewater system to be used for system modifications and/or improvements.

Electric, Telephone and Cable TV Systems – There is no observable or reported short comings for power and telephone system at Kahana Sunset.

Storm Water System – As detailed in preceding sections and separately in the Preliminary Drainage Report, the existing storm drain system at Kahana Sunset, although performs perfunctorily, it needs, certain modifications and upgrading. The list of recommendations for improvements to on-site drainage infrastructure shall include:

a. Design and construction of a new terminus for the 36-inch storm drain/outfall, which daylights at the beach, makai of the existing shower/barbeque pavilion;
b. Installation of a new drain pipe and inlet to replace the inadequate storm drain no. 6, and drain inlet no. 1, which receive overland flows from paved drive way, and the parking areas of Buildings E and F;

c. Install a new drain inlet at the south-western corner of parking lot for Building A and B. the new inlet shall replace the existing pipe which conveys runoff from the paved parking area into the open channel no. 1., and is often blocked by leaves and extraneous materials, causing localized ponding;
d. Construct a new inlet at the terminus of Channel no. 1, to improve conveyance of channelized flow into the existing drain line no. 7, terminates along the face of the retaining wall fronting Building A;
e. Construct an intercepting channel with gratings, to be installed along the width of the lower driveway, at location(s) to be determined, in order to reduce potential hazards of slippery driveway. A new pipe shall be installed to connect the end of the intercepting channel to the new inlet no. 1;
f. Inspect and clean all existing on-site storm manholes, to ensure they are free of blockages and debris;
g. Retrofit and install filters in all on-site drain inlets, to capture sediments, debris and other pollutants before they enter the system and ultimately discharge into the bay.

APPENDICES

Marc M. Siah & Associates, Inc.

Consulting Civil • Structural • Environmental & Ocean Engineers
820 South Beretania Street, Suite 201, Honolulu, Hawaii 96813

APPENDIX A

Potable Water Demand
Wastewater Generation Rates
Electrical Load Calculations

Marc M. Siah & Associates, Inc.

Consulting Civil • Structural • Environmental & Ocean Engineers
820 South Beretania Street, Suite 201, Honolulu, Hawaii 96813

Potabl Water Demands:

According to State of Hawaii, Water System Standards, Table 100-18		
for Multi-Family Low Rise designation → Average daily demand =		560 gallons/unit
No. of Units	80	
Total daily Demand =	44800	Gallons/day
for Resort designation → Average daily demand =		350 gallons/day
Total Daily Demand =	28000	Gallons/day
Use Higher no. → Average daily demand =		44800 gallons/day
Laundry water requirement =	300	gallons/day
No. of Laundry Machines	2	
Total Daily Demand =	600	gallons/day
From Table 100-19, for PUD town house and low rise designation, A-2		
Fire Flow Requirements =	2000	gallons for 2 hours
Total Daily Water Demand (Excluding Fire Flow Requirements)=		45400 Gallons/day
Total Daily Water Demand (Including Fire Flow Requirements)=		47100 Gallons/day

820 S. Beretania Street ● Suite 201 ● Honolulu, HI ● Phone: (808) 538-7180 ● Fax: (808) 528-4352 ● Email: msiah@mmsengineering.com

Wastewater Flow:

According to the County of Maui Wastewater Flow Standards, see table attached

for Apartment/Condo → Average Daily Contribution =		255	gallons/unit/day
No. of Units	80		
Daily wastewater flow rate =		20400	gallons/day
Laundry wastewater flow rate =		600	gallons/day
Total Daily Wastewater Flow =		21000	gallons/day
Flow Rate @ Building A:			
No. of Units	10		
Daily Wastewater Flow rate =		2550	gallons/day
Flow Rate @ Building B:			
No. of Units	16		
Daily Wastewater Flow rate =		4080	gallons/day
Flow Rate @ Building C:			
No. of Units	11		
Daily Wastewater Flow rate =		2805	gallons/day
Flow Rate @ Building D:			
No. of Units	14		
Daily Wastewater Flow rate =		3570	gallons/day
Flow Rate @ Building E:			
No. of Units	16		
Daily Wastewater Flow rate =		4080	gallons/day
Flow Rate @ Building F:			
No. of Units	12		
Daily Wastewater Flow rate =		3060	gallons/day
Flow Rate @ Building G:			
No. of Units	1		
Daily Wastewater Flow rate =		255	gallons/day
Flow Rate @ Laundry:			
No. of washing Machines	2		
Daily Wastewater Flow rate =		600	gallons/day

820 S. Beretania Street ● Suite 201 ● Honolulu, HI ● Phone: (808) 538-7180 ● Fax: (808) 528-4352 ● Email: msiah@mmsengineering.com

Electrical Load calculations:

Assume average unit floor area of 1200 SF to include:

Dishwasher	1.5	kVA
Water Heater	4	kVA
Washing Machine	1.2	kVA
Dryer	4.5	kVA
Range	14.4	kVA
A/C 230 Volt 17A	3.91	kVA

Total Connected Load per unit:

General Lighting Load - use 3 VA per sq. ft. for general use lighting and receptacle

Buildings A and F:

	2 bedrooms - Floor Area	1414	SF	
General Lighting:	1414 sq. ft. X 3 VA =		4242	VA

Buildings B, C, D, E:

	1 bed-room -Floor Area	784	SF	
	2 bed-rooms - Floor Area	1442	SF	
General Lighting:	1 bed-room: 784 sq. ft. X 3 VA =		2352	VA
General Lighting:	2 be-rooms: 1442 sq. ft. X 3 VA =		4326	VA

Building G:

	4 bed-room - Floor Area	1144	SF	
General Lighting:	1144 sq. ft. X 3 VA =		3432	VA

Laundry and Offices:

	3 Offices and 1 Laundry Room – Floor Area	780	SF	
General Lighting:	780 sq. ft. X 3 VA =		2340	VA
3 offices and laundry room- use 2 Circuits @1500VA per circuit =			12000	VA
2 Washing Machines Circuits @ 2500 VA =			5000	VA
2 Dryer Circuits @ 4500 VA =			9000	VA
Total Connected Load at Laundry =			14000	VA
	Total Connected load at Laundry and 3 offices =		28340	VA

820 S. Beretania Street ● Suite 201 ● Honolulu, HI ● Phone: (808) 538-7180 ● Fax: (808) 528-4352 ● Email: msiah@mmsengineering.com

Small Appliance Circuit:

1 bed-room - use 4 circuits @ 1500 VA per circuit =	6000	VA
2 bed-rooms - use 6 circuits @ 1500 VA per circuit =	9000	VA

Laundry Circuit =	1500	VA
Dishwasher =	1500	VA
Water Heater =	4000	VA
Dryer =	4500	VA
Range =	14,400	VA
A/C =	3910	VA
Subtotal	29,810	VA

Total Connected Load per Unit:

Buildings A and F: (only 2 bed-room units)	34,052	VA
Buildings B,C,D,E (1 bed-room units)	32,162	VA
Buildings B,C,D,E (2 bed-room units)	34,136	VA
Building G	33,242	
Laundry and 3 offices	28,340	

Total Calculated Load per Unit = Total Connected Load X Load Factor

Use a demand factor of 0.41

Buildings A and F: (only 2 bed-room units)	13961	VA
Buildings B,C,D,E (1 bed-room units)	13186	VA
Buildings B,C,D,E (2 bed-room units)	13996	VA
Building G (4 bed-room unit)	13629	
Laundry (3 offices and laundry room)	11619	

Total calculated Loads per Building

Building A	10, 2-bed-room units	139613	VA
Building B	11, 2-bed-room and 5, 1-bed-room units	219885	VA
Building C	8, 2-bed-room and 3, 1-bed-room units	151525	VA
Building D	11 2-bed-room and 3, 1-bed-room units	193513	VA
Building E	11 2-bed-room and 5, 1-bed-room units	219885	VA
Building F	12, 2-bed-room units	167536	VA
Building G	1, 4- bed-room unit	13629	VA
Laundry	3 offices and laundry room	11619	VA
	Subtotal	1117207	VA

820 S. Beretania Street ● Suite 201 ● Honolulu, HI ● Phone: (808) 538-7180 ● Fax: (808) 528-4352 ● Email: msiah@mmsengineering.com

Ground lighting:				
Use 20 circuits for light poles for grounds lighting @ 3000 VA per circuit =			60000	VA
Use 0.3 VA per square ft. for general lighting of the central open space				
General lighting in central open space and between buildings=			8803	VA
Use a demand factor of 0.41				
Total Load for Grounds lighting =			28209	VA
Total Load for Sewage Pumps:				
Electric Motor =	32.4		kVA	
Use Demand factor of 0.41				
Total Calculated Load=			13284	VA
Total Calculated Electrical Load for the Development =			1158700	VA
		or =	1159	kVA

820 S. Beretania Street ● Suite 201 ● Honolulu, HI ● Phone: (808) 538-7180 ● Fax: (808) 528-4352 ● Email: msiah@mmsengineering.com

Table 100-18 - DOMESTIC CONSUMPTION GUIDELINES				
	AVERAGE DAILY DEMAND*			
ZONING DESIGNATION	HAWAII	KAUAI	MAUI	OAHU
RESIDENTIAL:				
Single Family or Duplex	400 gals/unit	500 gals/unit	600 gals/unit or 3000 gals/acre	500 gals/unit or 2500 gals/acre
Multi-Family Low Rise	400 gals/unit	350 gals/unit	560 gals/unit or 5000 gals/acre	400 gals/unit or 4000 gals/acre
Multi-Family High Rise	400 gals/unit	350 gals/unit	560 gals/unit	300 gals/unit
COMMERCIAL:				
Commercial Only	3000 gals/acre	3000 gals/acre	6000 gals/acre	3000 gals/acre
Commercial/Industrial Mix	--	5000 gals/acre	140 gals/1000 sq. ft.	100 gals/1000 sq. ft.
Commercial/Residential Mix	--	3000 gals/acre	140 gals/1000 sq. ft.	120 gals/1000 sq. ft.
RESORT (To include hotel for Maui only)	400 gals/unit (1)	350 gals/unit	350 gals/unit or 17000 gals/acre	350 gals/unit or 4000 gals/acre
LIGHT INDUSTRY:	4000 gals/acre	4000 gals/acre	6000 gals/acre	4000 gals/acre
SCHOOLS, PARKS:	4000 gals/acre or 60 gals/student	4000 gals/acre or 60 gals/student	1700 gals/acre or 60 gals/student	4000 gals/acre or 60 gals/student
AGRICULTURE:		2,500 gals/acre	5000 gals/acre	4000 gals/acre

* - Where two or more figures are listed for the same zoning, the daily demand resulting in higher consumption use shall govern the design unless specified otherwise.

(1) - Subject to special review and control by the Manager.

Table 100-19 - FIRE FLOW REQUIREMENTS

LAND USE	FLOW (GPM)/DURATION (HRS)/FIRE HYDRANT SPACING (FT.)			
	HAWAII	KAUAI	MAUI	OAHU
Agriculture	500/0.5/600 (1)	250/1/500	500/2/500	1000/0.5/700
Rural			1000/2/500	
Single Family	(2)	(4)	1000/2/350	1000/1/350
Duplex	1500/1/300	(4)	1250/2/350	1000/1/350
PUD Townhouse and Low Rise Apartments	1500/1/300	(4)	(5)	1500/1/250
Schools, Neighborhood Businesses, Small Shopping Centers, Hotels (except Maui), and High Rise Apartments	2000/2/300	2000/2/350	2000/2/250	2000/2/250
Light Industry, Downtown Business, Large Shopping Center, and Hospitals	2,000/2/300	3000/3/350	2000/2/250	4000/3/250
Heavy Industry, Hotels	2,000/2/300	3000/3/350	2,500/2/ 250	(3)

(1) - Applies to one acre lot size or less
(2) - 10,000 sq. ft. or larger lot size = 500/2/600; Less than 10,000 sq. ft. lot size = 1000/1/600
(3) - Subject to special review and control by Manager
(4) - R-2 = 500/1/500 R-4 = 750/2/500 R-6 = 1000/2/500 R-10 = 1250/2/350
R-20 = 1500/2/350 RR-10 = 1500/2/350 RR-20 = 2000/2/350
(5) - A-1 = 1500/2/250 A-2 = 2000/2/250

Note:

1. On dead end streets, the last F.H. shall be located at one half the spacing distance for F.H.s from the last house/unit (frontage property line or to the driveway/access for the property).
2. Spacing of fire hydrant shall be measured along the roadway.

County of Maui
Wastewater Reclamation Division

2200 Main Street Suite 610 ● Wailuku, HI 96793 ● (808) 270-7417 ● 270-7425 fax

Wastewater Flow Standards

The following wastewater flow contributions are to be utilized for projecting wastewater flows for the following types of uses, unless other supporting data is provided to show differently.

Type of use	Unit	Contribution (Gal/Unit/Day)
Apartment/Condo	Unit	255
Bar	Seat	15
Church, large	Seat	6
Church, small	Seat	4
Cottage or Ohana (600 S.F. max)	Unit	180
Day-care Center	Child	10
Factory	Employee	30
Golf Clubhouse	Golf Rounds	25
Hotel, resort with laundry	Room	350
Hotel, average with laundry	Room	300
Hotel, average without laundry	Room	250
Hospital	Bed	200
Industrial Shop	Employee	25
Laundry (coin operated)	Machine	300
Office	Employee	20
Residence, subdivision	Home	350
Restaurant, average	Seat	80
Restaurant, fast food	Seat	100
Rest Home	Patient	100
Retail Store	Employee	15
School, elementary	Student	15
School, high	Student	25
Storage, w/ offices	Employee	15
Storage w/ offices and showers	Employee	30
Store Customer bathroom usage	Use	5
Theater	Seat	5

The following standards will be used as necessary to compute the number of units required to make wastewater calculations:

Residential Occupancy	4 persons per unit
Apartment/Condo Occupancy	2.5 persons per unit
Hotel Occupancy	2.25 persons per unit
Hotel Employees	1 per hotel room
Office Employees	1 per 200 square feet of floor area
Retail Warehouse Employees	1 per 350 square feet of floor area
Storage/ Industrial Employees	1 per 500 square feet of floor area

Average Wastewater Flow: The average wastewater flow is the sum of the applicable wastewater flows listed above.

Maximum Wastewater Flow: The maximum wastewater flow is obtained by multiplying the average flow by a flow factor. The flow factor shall be obtained utilizing the Babbit formula or other rationale method.

Dry Weather Infiltration/Inflow: The following rates shall be used in the design of wastewater transmission lines:

a. 35 gpcd* - Wastewater lines laid below the normal ground water table.

b. 5 gpcd - Wastewater lines laid above the normal ground water table.

* gpcd = Gallons per Capita Day

Wet Weather Infiltration/Inflow: The following rates shall be used in the design of wastewater transmission lines:

a 2,750 gad* - Wastewater lines laid below the normal ground water table.

b. 1,250 gad - Wastewater lines laid above the normal ground water table.

* gad = Gallons per Acre per Day

Design Average Flow: The design average flow is the sum of the average wastewater flow and the applicable dry weather infiltration/inflow rate.

Design Maximum Flow: The design maximum flow is the sum of the maximum flow and the applicable dry weather infiltration/inflow rate.

Design Peak Flow: The design peak flow of wastewater is the sum of design maximum flow and the wet weather infiltration/inflow

APPENDIX B

System Head Curve
Pump Performance Curve

Marc M. Siah & Associates, Inc.

Consulting Civil • Structural • Environmental & Ocean Engineers
820 South Beretania Street, Suite 201, Honolulu, Hawaii 96813

Myers®
Pentair Water

4WHV and V4WHV

4" Solids Handling Wastewater Pumps
Horizontal and Vertical Discharge

Myers®
Pentair Water

TECHNICAL INFORMATION

IDEAL FOR MOST LIGHT TO MEDIUM COMMERCIAL INSTALLATIONS

The 4WHV and V4WHV series solids handling pumps are designed primarily for commercial applications such as schools and churches, industrial plants, shopping centers, apartments and condominiums, marinas, interstate rest stops, sewage collection systems, campgrounds, motels, restaurants, office and commercial buildings, state and federal parks, hospitals and nursing homes, dewatering, trailer parks and treatment plants. This pump can be installed on legs (vertical discharge) or with a quick-disconnect slide rail system. Its ability to handle 3-inch spherical solids makes it ideal for most light to medium commercial installations. For more information, contact your Myers distributor or the Myers sales office at 419-289-1144.

High efficiency hydraulic design cuts pumping costs and extends life of fluid end components.

- Two-vane rounded port impellers handle solids with ease at high operating efficiencies.
- Modified constant velocity volute offers quiet operation, low radial loads over extended portion of performance curve.

Durable motor will deliver many years of reliable service.

- Oil-filled motor for maximum heat dissipation and constant bearing lubrication.
- Heat sensor thermostats embedded in windings protect motor from overheat conditions.
- Seal leak probe in seal chamber warns of moisture entry; helps prevent costly motor burnout.

Product Capabilities		
Capacities To	720 gpm	45.5 lps
Heads To	59 ft.	17.9 m
Solids Handling (dia.)	3 in.	76 mm
Liquids Handling	raw unscreened sewage, effluent, storm water	
Intermittent Liquid Temp.	up to 140°F	up to 60°C
Winding Insulation Temp. (Class F)	311°F	155°C
Motor Electrical Data (Single phase motors are capacitor start type. Myers control panels or capacitor kits are required for proper operation and warranty.)	750 RPM 3 – 5 HP, 230V, 1Ø, 60 Hz 3 – 10 HP, 200/230/460/575V, 3Ø, 60 Hz	
Std. Third Party Approvals	CSA	
Acceptable pH Range	6 – 9	
Specific Gravity	.9 – 1.1	
Viscosity	28 – 35 SSU	
Discharge, Flanged Centerline (Horizontal or Vertical)	4 in.	101.6 mm
Min. Sump Dia. (Duplex)	60 in.	1.5 m

NOTE: Consult factory for applications outside these recommendations.

Construction Materials	
Motor Housing, Seal Housing, Cord Cap and Volute Case	cast iron, Class 30, ASTM A48
Enclosed 2-Vane Impeller	ductile iron, Class 65, ASTM A536
Power and Control Cord	35 ft. SOOW
Mechanical Seals Standard Optional	double tandem, type 21 carbon and ceramic tungsten, carbide
Pump, Motor Shaft	416 SST
Fasteners	300 series SST
Wear Ring	brass

1750 RPM PERFORMANCE CURVE

Myers® Pentair Water

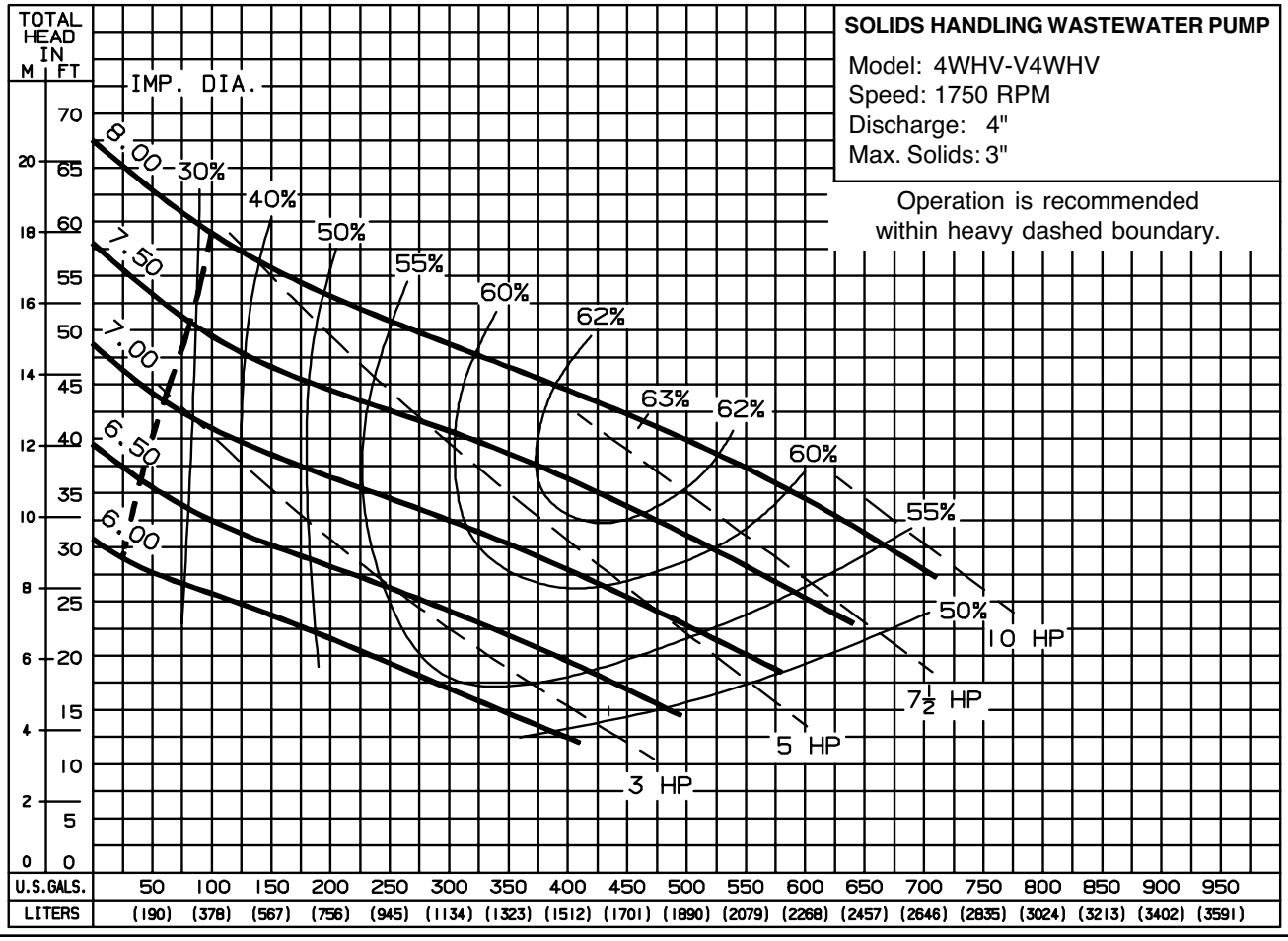

Pump performance is based on clear water (1.0 specific gravity @ 68°F) and pump fluid end (hydraulic) efficiency. Motor data based on 40°C ambient temperature.

Available Models	Motor Electrical Data												
Standard	HP	Volts	Phase	Hertz	Start Amps	Run Amps	Service Factor Amps	Run KW	Service Factor KW	Start KVA	Run KVA	NEC Code Letter	Service Factor
4WHV30M4-21	3	230	1	60	101	17.5	21	2.1	2.5	23.2	4.0	J	1.2
4WHV30M4-03	3	200	3	60	66.7	15	18	3.5	4.3	23.0	5.0	G	1.2
4WHV30M4-23	3	230	3	60	58	12	14.4	3.5	4.3	23.0	5.0	G	1.2
4WHV30M4-43	3	460	3	60	29	6	7.2	3.5	4.3	23.0	5.0	G	1.2
4WHV30M4-53	3	575	3	60	21.3	5	6	3.5	4.3	23.0	5.0	G	1.2
4WHV50M4-21	5	230	1	60	141	34	41	6.3	7.7	32.4	7.8	H	1.2
4WHV50M4-03	5	200	3	60	111	21.6	26	5.6	6.9	38.4	7.2	H	1.2
4WHV50M4-23	5	230	3	60	96	18	21.6	5.6	6.9	38.4	7.2	H	1.2
4WHV50M4-43	5	460	3	60	48	9	10.8	5.6	6.9	38.4	7.2	H	1.2
4WHV50M4-53	5	575	3	60	39	7.2	8.6	5.6	6.9	38.4	7.2	H	1.2
4WHV75M4-03	7.5	200	3	60	172	32.2	37	8.0	9.9	59.5	11.1	J	1.2
4WHV75M4-23	7.5	230	3	60	150	28	32	8.0	9.9	59.7	11.1	J	1.2
4WHV75M4-43	7.5	460	3	60	74.8	14	16	8.0	9.9	59.7	11.1	J	1.2
4WHV75M4-53	7.5	575	3	60	67.2	11.2	13	8.0	9.9	66.8	11.1	K	1.2
4WHV100M4-03	10	200	3	60	172	37	37	10.1	10.1	59.5	12.8	G	1.0
4WHV100M4-23	10	230	3	60	150	32	32	10.1	10.1	59.7	12.8	G	1.0
4WHV100M4-43	10	460	3	60	74.8	16	16	10.1	10.1	59.7	12.8	G	1.0
4WHV100M4-53	10	575	3	60	67.2	13	13	10.1	10.1	66.8	12.8	H	1.0

Motor Efficiencies and Power Factor									
		Motor Efficiency %				Power Factor %			
HP	Phase	Service Factor Load	100% Load	75% Load	50% Load	Service Factor Load	100% Load	75% Load	50% Load
3	1	71	70	67	59	52	51	49	45
3	3	74	73.5	69.5	61.5	73	70.5	62.5	52
5	1	67.5	68	65	56	83	81	73	62.5
5	3	77	77	77	70.5	80	77.5	71	59.5
7.5	3	75	75	72.5	65	77	72	62	49.5
10	3	75	75	75	71	79	79	72	58

Myers®
Pentair Water

ADVANTAGES BY DESIGN

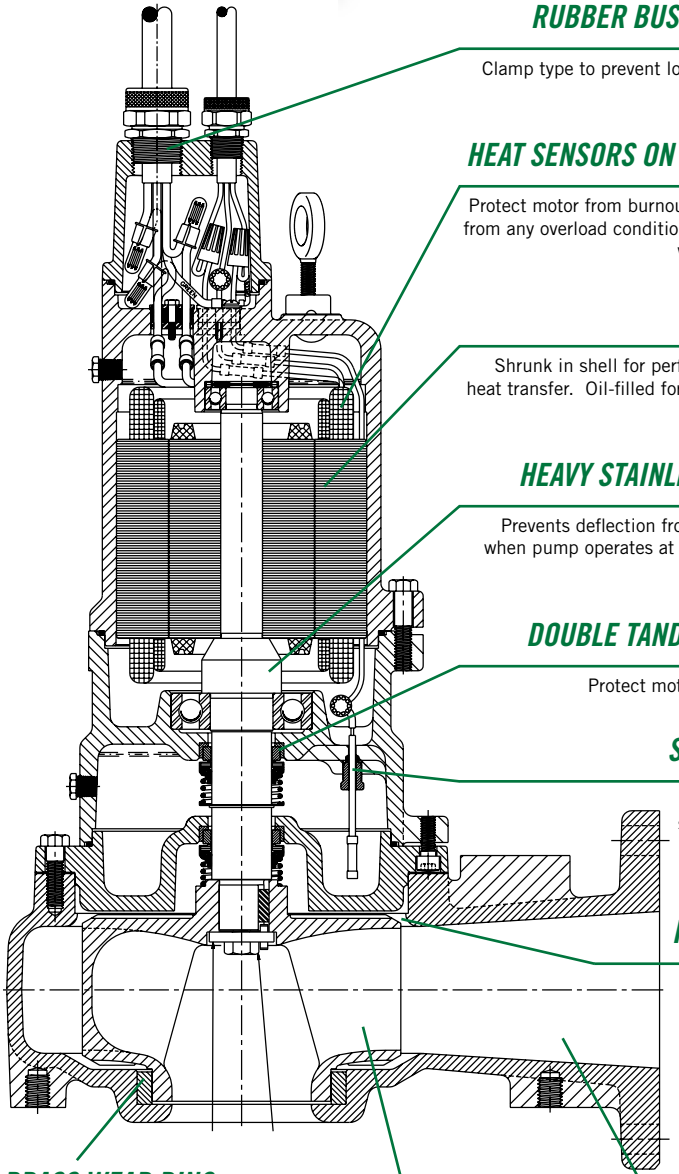

RUBBER BUSHING CORD GRIP

Clamp type to prevent loosening, withstand pull of 300 pounds.

HEAT SENSORS ON MOTOR WINDING

Protect motor from burnout due to excessive heat from any overload condition. Automatically resets when motor has cooled.

MOTOR STATOR

Shrunk in shell for perfect alignment and best heat transfer. Oil-filled for continuous lubrication of bearings and seals.

HEAVY STAINLESS STEEL SHAFT

Prevents deflection from impeller radial loads when pump operates at heads higher than peak efficiency range.

DOUBLE TANDEM SHAFT SEALS

Protect motor, operate in clean oil.

SEAL LEAK PROBE

Detects water in seal housing. Activates warning light in control panel.

PUMP OUT VANES

Help keep trash from seal, reduce pressure at seal faces.

HORIZONTAL DISCHARGE VOLUTE CASE

4" flanged.

VERTICAL DISCHARGE VOLUTE CASE (not shown)
Includes support legs.
4" flanged.

BRASS WEAR RING

Prevents rust buildup and reduces leakage and wear. Replaceable to restore original running clearance and pump efficiencies.

HIGH EFFICIENCY IMPELLER

Two-vane rounded port, non-clogging design.

DIMENSIONS [Dimensions in mm]

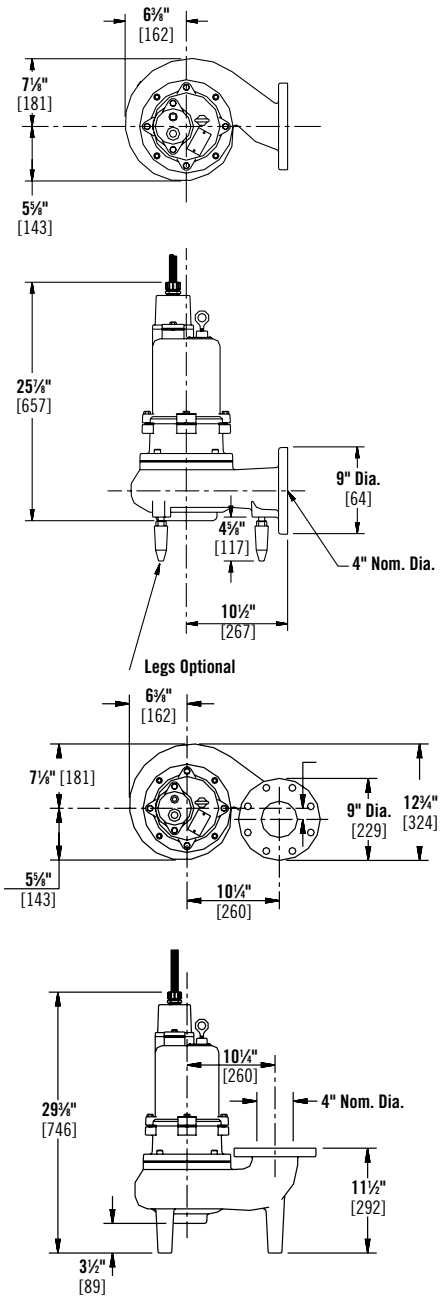

NOTE: Myers reserves the right to make revisions to its products and their specifications, and to this bulletin and related information, without notice.

Pentair Water™

800 Airport Road • North Aurora, Illinois 60542 • Phone: 888-987-8680
3601 Fairbanks Avenue • Kansas City, Kansas 66106 • Phone: 888-416-9510
1101 Myers Parkway • Ashland, Ohio 44805 • Phone: 888-416-9513
8263 Florida Boulevard • Denham Springs, Louisiana 70726 • Phone: 800-219-9183

www.femyers.com

K3240 08/11 © 2011 Pentair Pump Group, Inc.

Head Loss calculations for System Head Curve:

Q		D	Area	Length	V	RHO	nu	epsilon	epsilon/D	Reynold's No.	f	L/D	$V^2/2g$	Head Loss
gpm	cfs	ft	sf	ft	fps	$slug/ft^3$	$lbf\text{-}s/ft^2$	in		(4*rho*Q)/nu*Pi*D	from Moody			$H_L=f*(L/D)*(V^2/2g)$
						1.94	0.00002735	0.0102						
50	0.1115	0.33	0.124	241	0.899194	1.94	0.00002735	0.0102	0.0069	30225.31702	0.0365	723	0.0126	0.331323056
100	0.223	0.33	0.124	241	1.798387	1.94	0.00002735	0.0102	0.0069	60450.63403	0.036	723	0.0502	1.307137537
150	0.3345	0.33	0.124	241	2.697581	1.94	0.00002735	0.0102	0.0069	90675.95105	0.0345	723	0.1130	2.818515314
200	0.446	0.33	0.124	241	3.596774	1.94	0.00002735	0.0102	0.0069	120901.2681	0.0342	723	0.2009	4.967122641
250	0.5575	0.33	0.124	241	4.495968	1.94	0.00002735	0.0102	0.0069	151126.5851	0.034	723	0.3139	7.715742406
300	0.669	0.33	0.124	241	5.395161	1.94	0.00002735	0.0102	0.0069	181351.9021	0.0338	723	0.4520	11.04531219
350	0.7805	0.33	0.124	241	6.294355	1.94	0.00002735	0.0102	0.0069	211577.2191	0.0338	723	0.6152	15.03389715
400	0.892	0.33	0.124	241	7.193548	1.94	0.00002735	0.0102	0.0069	241802.5361	0.0336	723	0.8035	19.51992055
450	1.0035	0.33	0.124	241	8.092742	1.94	0.00002735	0.0102	0.0069	272027.8531	0.0336	723	1.0170	24.70489945
500	1.115	0.33	0.124	241	8.991935	1.94	0.00002735	0.0102	0.0069	302253.1702	0.0335	723	1.2555	30.40910243
550	1.2265	0.33	0.124	241	9.891129	1.94	0.00002735	0.0102	0.0069	332478.4872	0.0335	723	1.5192	36.79501393
600	1.338	0.33	0.124	241	10.79032	1.94	0.00002735	0.0102	0.0069	362703.8042	0.0334	723	1.8079	43.65839374
650	1.4495	0.33	0.124	241	11.68952	1.94	0.00002735	0.0102	0.0069	392929.1212	0.0334	723	2.1218	51.23797598
700	1.561	0.33	0.124	241	12.58871	1.94	0.00002735	0.0102	0.0069	423154.4382	0.0334	723	2.4608	59.42392481
750	1.6725	0.33	0.124	241	13.4879	1.94	0.00002735	0.0102	0.0069	453379.7552	0.0334	723	2.8249	68.21624022

820 S. Beretania Street • Suite 201 • Honolulu, HI • Phone: (808) 538-7180 • Fax: (808) 528-4352 • Email: msiah@mmsengineering.com

Flow Rate	Total Head	
0	28.4	0
50	28.73132306	0.331323
100	29.70713754	1.307138
150	31.21851531	2.818515
200	33.36712264	4.967123
250	36.11574241	7.715742
300	39.44531219	11.04531
350	43.43389715	15.0339
400	47.91992055	19.51992
450	53.10489945	24.7049
500	58.80910243	30.4091
550	65.19501393	36.79501
600	72.05839374	43.65839
650	79.63797598	51.23798
700	87.82392481	59.42392
750	96.61624022	68.21624

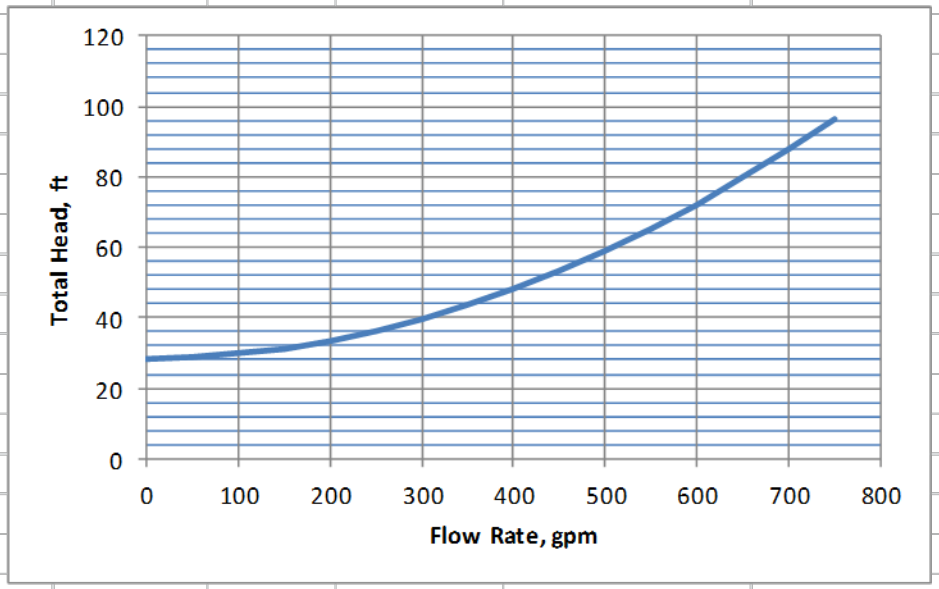

System Head Curve

820 S. Beretania Street • Suite 201 • Honolulu, HI • Phone: (808) 538-7180 • Fax: (808) 528-4352 • Email: msiah@mmsengineering.com

1750 RPM PERFORMANCE CURVE

Myers
Pentair Water

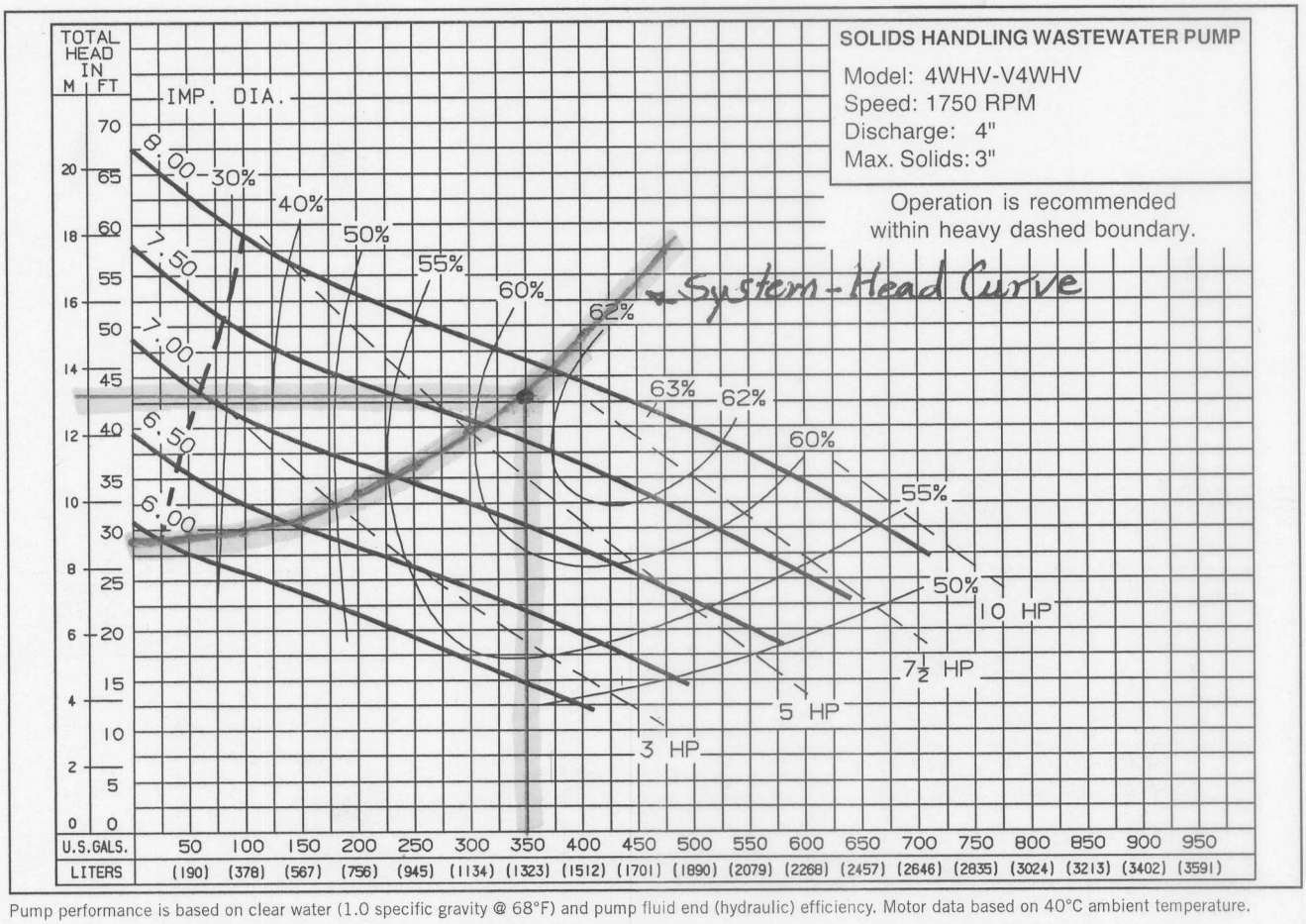

Pump performance is based on clear water (1.0 specific gravity @ 68°F) and pump fluid end (hydraulic) efficiency. Motor data based on 40°C ambient temperature.

Available Models	Motor Electrical Data												
Standard	HP	Volts	Phase	Hertz	Start Amps	Run Amps	Service Factor Amps	Run KW	Service Factor KW	Start KVA	Run KVA	NEC Code Letter	Service Factor
4WHV30M4-21	3	230	1	60	101	17.5	21	2.1	2.5	23.2	4.0	J	1.2
4WHV30M4-03	3	200	3	60	66.7	15	18	3.5	4.3	23.0	5.0	G	1.2
4WHV30M4-23	3	230	3	60	58	12	14.4	3.5	4.3	23.0	5.0	G	1.2
4WHV30M4-43	3	460	3	60	29	6	7.2	3.5	4.3	23.0	5.0	G	1.2
4WHV30M4-53	3	575	3	60	21.3	5	6	3.5	4.3	23.0	5.0	G	1.2
4WHV50M4-21	5	230	1	60	141	34	41	6.3	7.7	32.4	7.8	H	1.2
4WHV50M4-03	5	200	3	60	111	21.6	26	5.6	6.9	38.4	7.2	H	1.2
4WHV50M4-23	5	230	3	60	96	18	21.6	5.6	6.9	38.4	7.2	H	1.2
4WHV50M4-43	5	460	3	60	48	9	10.8	5.6	6.9	38.4	7.2	H	1.2
4WHV50M4-53	5	575	3	60	39	7.2	8.6	5.6	6.9	38.4	7.2	H	1.2
4WHV75M4-03	7.5	200	3	60	172	32.2	37	8.0	9.9	59.5	11.1	J	1.2
4WHV75M4-23	7.5	230	3	60	150	28	32	8.0	9.9	59.7	11.1	J	1.2
4WHV75M4-43	7.5	460	3	60	74.8	14	16	8.0	9.9	59.7	11.1	J	1.2
4WHV75M4-53	7.5	575	3	60	67.2	11.2	13	8.0	9.9	66.8	11.1	K	1.2
4WHV100M4-03	10	200	3	60	172	37	37	10.1	10.1	59.5	12.8	G	1.0
4WHV100M4-23	10	230	3	60	150	32	32	10.1	10.1	59.7	12.8	G	1.0
4WHV100M4-43	10	460	3	60	74.8	16	16	10.1	10.1	59.7	12.8	G	1.0
4WHV100M4-53	10	575	3	60	67.2	13	13	10.1	10.1	66.8	12.8	H	1.0

Motor Efficiencies and Power Factor									
		Motor Efficiency %				Power Factor %			
HP	Phase	Service Factor Load	100% Load	75% Load	50% Load	Service Factor Load	100% Load	75% Load	50% Load
3	1	71	70	67	59	52	51	49	45
3	3	74	73.5	69.5	61.5	73	70.5	62.5	52
5	1	67.5	68	65	56	83	81	73	62.5
5	3	77	77	77	70.5	80	77.5	71	59.5
7.5	3	75	75	72.5	65	77	72	62	49.5
10	3	75	75	75	71	79	79	72	58

By _____ Date _____ Subject _____ Sheet No. ___ of ___

Checked By _____ Project Kahana Sunset Job Number _____

Daily Wastewater flow = 21,000 gpd

Volume to be pumped in each pumping cycle =

= 6'x4'x8' = 192 CF

= 1,436.16 gallons

No. of pumping cycle per day = $\frac{21,000}{1,436.16}$

= 14.6 Cycle

Say 15 cycles/day

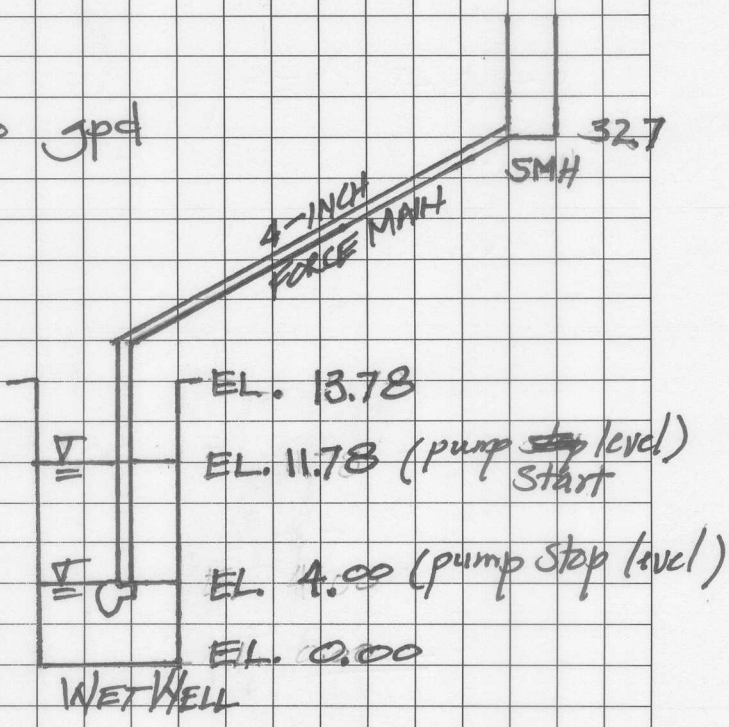

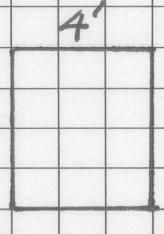

WET WELL CROSS SECTION

Time of each pumping cycle = $\frac{1,436.16}{350 \text{ gpm}}$

= 4.10 min

820 S. Beretania Street • Suite 201 • Honolulu, HI • Phone: (808) 538-7180 • Fax: (808) 528-4352 • Email: msiah@mmsengineering.com

Marc M. Siah & Associates, Inc.

Consulting Civil • Structural • Environmental & Ocean Engineers
820 South Beretania Street, Suite 201, Honolulu, Hawaii 96813

APPENDIX K
Preliminary Drainage Report

PRELIMINARY DRAINAGE REPORT
FOR
KAHANA SUNSET CONDOMINIUM
KAHANA, MAUI

Prepared For:

Apartment Owners Association of
Kahana Sunset Condominium Complex
Kahana, Maui

Prepared By:

Marc M. Siah & Associates, Inc.

April 2012

Marc M. Siah & Associates, Inc.

Consulting Civil • Structural • Environmental & Ocean Engineers
820 South Beretania Street, Suite 201, Honolulu, Hawaii 96813

TABLE OF CONTENTS

Marc M. Siah & Associates, Inc.

Consulting Civil • Structural • Environmental & Ocean Engineers
820 South Beretania Street, Suite 201, Honolulu, Hawaii 96813

PRELIMINARY DRAINAGE REPORT FOR KAHANA SUNSET CONDOMINIUM

TABLE OF CONTENTS

SECTION	TITLE	PAGE
1.0	**INTRODUCTION**	
1.1	Project Background and Description	1-1
1.2	Scope of Report	1-3
2.0	**PROJECT CHARACTERISTICS**	
2.1	Description of the Project and Location	2-1
2.2	Land Use	2-3
2.3	Topographic and Geotechnical Features	2-3
2.4	Flora	2-5
2.5	Existing Drainage Infrastructure	2-5
3.0	**DRAINAGE ANALYSIS**	
3.1	Background	3-1
3.2	Flood Hazard Designation	3-1
3.3	Hydrologic Analysis	3-3
3.3.1	Hydrologic Criteria	3-3
3.3.2	Hydrologic Computations - Existing Conditions	3-5
3.3.3	Hydrologic Computations – Future (Finished) Conditions	3-11
4.0	**DRAINAGE INFRASTRUCTURE ADEQUACY EVALUATION**	
4.1	Existing Facilities and Hydraulic Calculations	4-1
4.2	Conclusions and Recommendations	4-3

APPENDICES:

Appendix A – Drainage Calculations

Appendix B – Hydraulic Calculations for Drain Pipes and Channels

TABLE OF CONTENTS
(Continued)

LIST OF FIGURES

FIGURE	TITLE	PAGE
1-1	General Location Map	1-2
1-2	Aerial Vicinity Map	1-4
2-1	Property Tax Map	2-2
2-2	Site Plan	2-4
2-3	Drainage Site Plan	2-8
2-4	Storm Drain Manhole Details	2-9
3-1	Flood Insurance Rate Map	3-2
3-2	Subarea Delineation for Storm Runoff Calculations – Existing Conditions	3-6
3-3	Proposed Site Plan	3-12
3-4	Subarea Delineation for Strom Runoff Calculations - Future Conditions	3-13

TABLE OF CONTENTS
(Continued)

LIST OF TABLES

TABLE	TITLE	PAGE
3-1	Summary of Drainage Calculations Results for the Existing Conditions	3-3
3-2	Summary of Drainage Calculations Results for Future (Finished) Conditions	3-4
4-1	Hydraulic Parameters for Storm Drain pipes and Channels	4-2

SECTION 1.0

INTRODUCTION

Marc M. Siah & Associates, Inc.

Consulting Civil • Structural • Environmental & Ocean Engineers
820 South Beretania Street, Suite 201, Honolulu, Hawaii 96813

SECTION 1.0

INTRODUCTION

1.1 Project Background and Description

The Kahana Sunset Condominium Complex is a multi-unit residential development in west Maui. The project site is located on a land parcel along the shorelines of Keonenui Bay which stretches between Alaeloa Point and Haukoe Point along west Maui coast. A vicinity map indicating the general location of the condominium property is shown in Figure 1-1. The complex is exposed to north swells and trade wind waves which undergo significant transformation as they approach the land and enter the bay. This exposure causes chronic beach erosion and accretion with occasional and at times severe structural damage to foundations and footings of existing protective coastal fortifications requiring reconstruction and repair under emergency conditions. At two recent occasions, specific emergency repairs were necessitated for seawalls fronting Buildings F and Building A, which were performed under emergency permits SM3 2009/0005 and SM3 2003/0001, respectively.

At the present time and in order to address the failure of the retaining wall fronting the BBQ pavilion/shower and to construct additional modifications to the protective seawalls in accordance with the development plan for shore protection, the Kahana Sunset AOAO is in the process of preparing a Master Plan and applying for a Shoreline Setback Variance (SSV) and Special Management Area (SMA) Use Permit. The SSV is necessary to allow additional construction work on the failing seawall and other planned modifications and additions to protective seawalls and coastal structures within the Shoreline Setback Area. In compliance with the State environmental review process, the Kahana Sunset AOAO is also preparing an Environmental Assessment for these modifications and renovations. In line with, and concurrent with these efforts, Marc M. Siah and Associates, Inc. is commissioned by the Kahana Sunset Condominium AOAO, to prepare a preliminary engineering report and drainage report for the Kahana Sunset Condominium Complex.

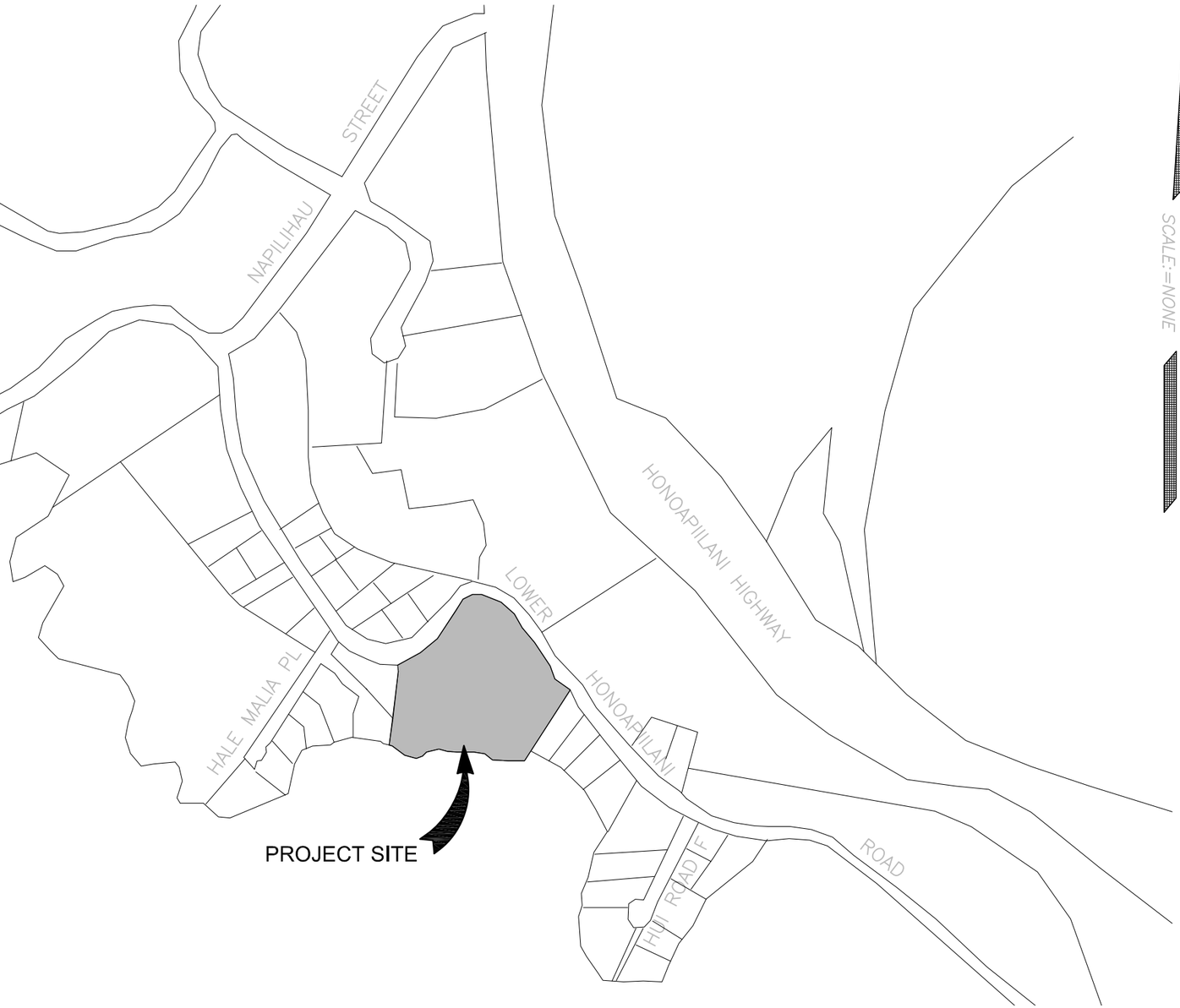

LOCATION MAP

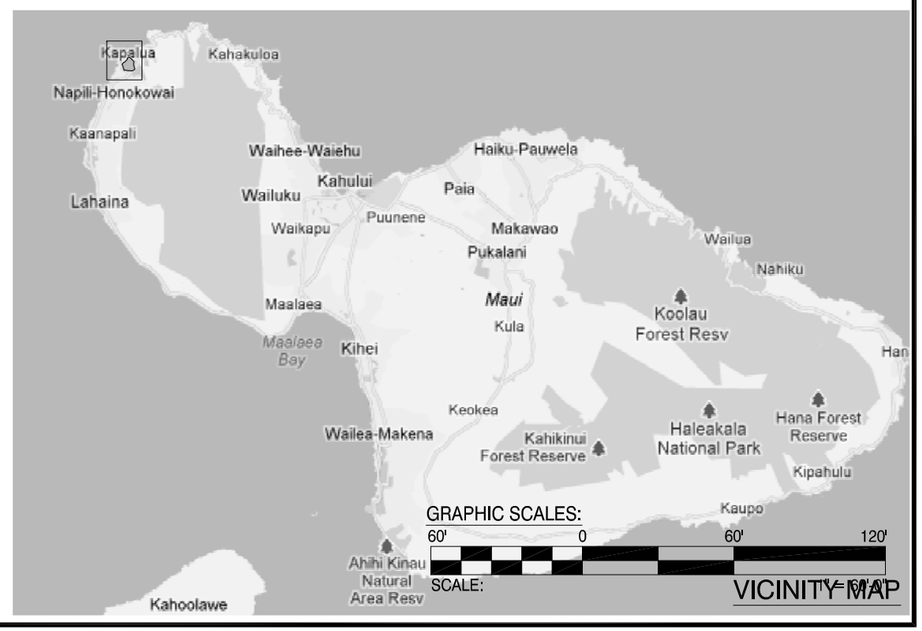

VICINITY MAP

FIG. 1-1 GENERAL LOCATION MAP
SCALE: NONE

Marc M. Siah & Associates, Inc.
Consulting Civil . Structural . Environmental & Ocean Engineers
810 S. Beretania Street, Suite 201, Honolulu, Hawaii 96813

The multi-unit condominium complex sits on a 4.467 acre land parcel and consists of five residential buildings encompassing 79 units of one and two-bedroom apartments, plus a Separate 4-bedroom apartment for the complex's resident manager, and a detached building housing three offices and a laundry room. The condominium complex was constructed in early 1970s which has undergone renovations and additions in later years. Aerial extent of the development is depicted in Figure 1-2.

1.2 Scope of Report

This drainage report describes the existing drainage infrastructure in the Kahana Sunset Condominium Complex and presents hydrological analyses and storm runoff calculations for the exiting conditions in contrast to the future conditions as planned in accordance with the project master plan. The analyses and calculations are performed in accordance with the Title MC-15 of County of Maui, Department of Public Works and Waste Management, Chapter 4, "Rules for the Design of Strom Drainage Facilities in the County of Maui."

The report further identifies inadequacies in the drainage infrastructure and provides recommendations for improvements and upgrading to the existing system.

Figure 1-2 Aerial Vicinity Map

SECTION 2.0

PROJECT CHARACTERISTICS

Marc M. Siah & Associates, Inc.

Consulting Civil • Structural • Environmental & Ocean Engineers
820 South Beretania Street, Suite 201, Honolulu, Hawaii 96813

SECTION 2.0

PROJECT CHARACTERISTICS

2.1 Description of the Project and Location

Kahana Sunset Condominium Complex is located on a 4.467-acre land parcel at 4909 Lower Honoapiilani Road along the western coast of the island of Maui. The land parcel is identified by Tax Map Key (TMK): 2-4-3-03:015 comprised of all of R. P. 4697, L.C. AW. 4807:03 to NIKA 2, all of R. P. 4697, L. C. AW. 4807:04 to NIKA 2, and Portion of R. P. AW. 5524 to L. KONIA. The Tax Map for the condominium complex is depicted in Figure 2-1.

The land parcel is designated as R-3 Residential, according to the Maui County Zoning. It consists of a mix of five separate two and three-story wood framed structures encompassing 79 units of two and one-bedroom apartments, plus a manager's residence and offices and a detached laundry building. The complex was originally constructed in early 1970s and has undergone several phases of alterations and/or renovations since then. There are a total of 16 one-bedroom units and 63 two-bedroom units in five detached structures referred to as Building "A" to "F" in addition to a 4-bedroom unit used as the property manager's residence and office in Building "G" plus two offices and a laundry room in a separate detached building next to Building "G". The units are mostly individually owned and used as residences or for vacation rental.

All structures excluding the Resident Manager's and the offices have three floors. Buildings A and E have eleven two-bedroom units. The units have 1106 SF of living area and 308 SF of lanai. Buildings B and E have five one-bed room units and eleven two-bed-room units. One bed-room units are all identical and have 700 SF of living area and 84 SF of Lanai. The two-bedroom units have 1050 SF of living area and 392 SF of lanai. Building D and E each has eleven one-bedroom units with 700 SF of living area and 84 SF of lanai. Building G is a four-bedroom unit used as the complex's Manager's residence. An additional detached building houses four offices and a laundry room and is located adjacent to building G.

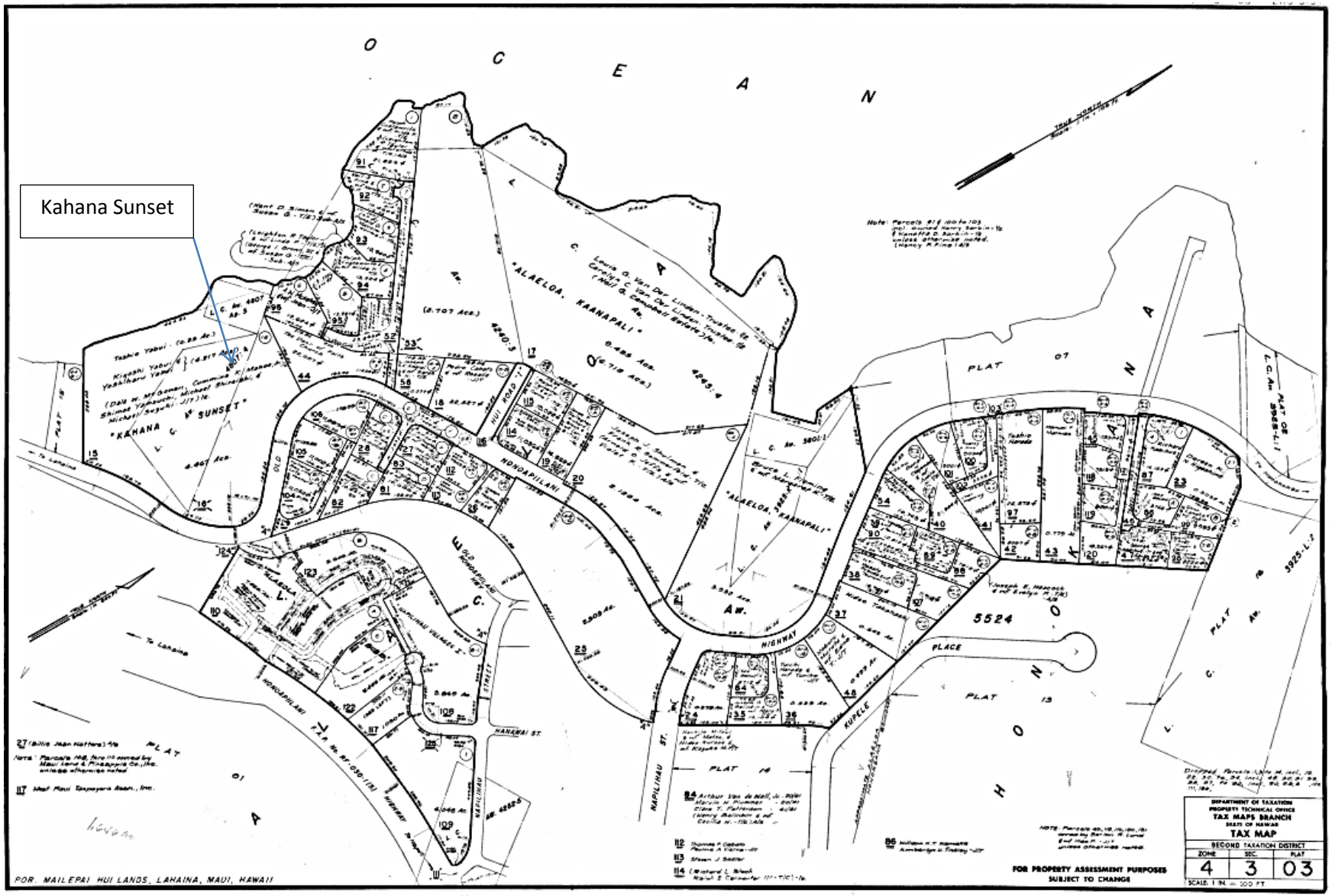

Figure 2-1 Property Tax Map

The grounds are well kept and landscaped with lawn, ornamental flowers and palm trees which include a pool, a shower and barbeque pavilion. A site plan showing various facilities of the development is depicted in Figure 2-2.

2.2 Land Use

The site of the development is designated as "R-3 Residential District" by Maui County. In West Maui Community Plan, the site is designated as "Single Family" and has a State Land Use "Urban" designation. The Kahana Sunset AOAO obtained a zoning variance in 1968 for multi-family apartment use.

2.3 Topographic and Geotechnical Features

The existing topography at the project site is defined by graded apartment pads and paved parking areas, developed over a gently sloping land which descends south westerly towards the beach along the Keonenui Bay. The meandering Lower Honoapiilani Road defines the northern and eastern boundary of the property and the elevations along this road bordering the property ranges from 49.9 above Mean Sea Level (MSL) at the northern section of the upper entrance to 47.23 at the southern entrance. The site has a southwesterly slope of about 9 percent.

According to the U.S. Natural Conservation Services (NRCS), the soils in the project area belong to Waiakoa-Keahua- Molokai Association which defines them as *moderately deep, deep, nearly level to moderately steep, well drained soils that have moderately fine textured subsoil*. The soils have a surface layer of dark reddish brown, friable silty clay loam. Substratum is soft, weathered igneous rock. Specifically the site is comprised of three types of soils, namely, beach sand (BS), Kahana Silty Clay (KbC), and rough broken and stony land (rRS).

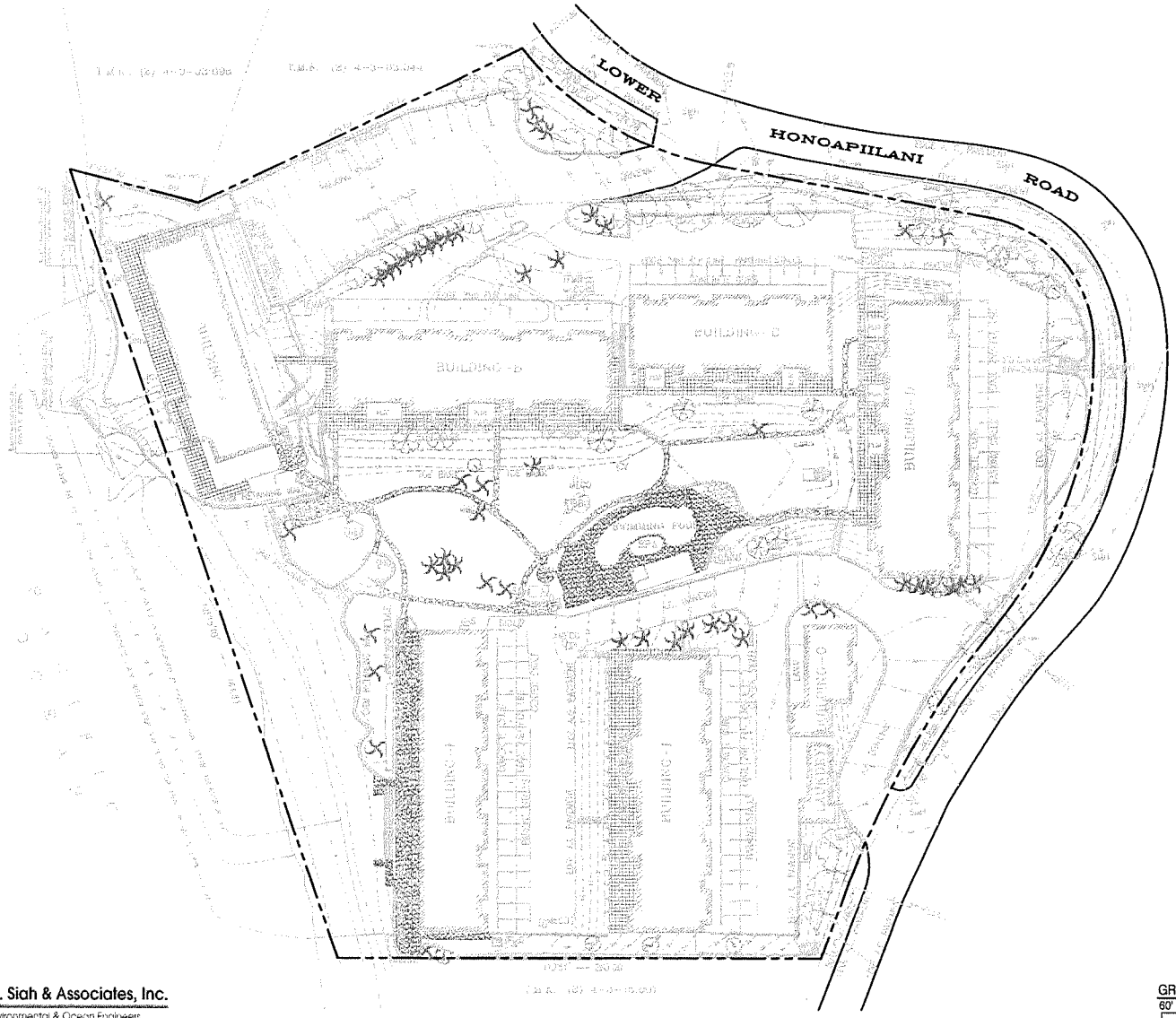

TRUE NORTH

LEGEND:

1. WM = WATER METER
2. WV = WATER VALVE
3. ICV = IRRIGATION CONTROL VALVE
4. SMH = SEWER MANHOLE
5. SDMH = STORM DRAIN MANHOLE
6. LP = LIGHT POST
7. FH = FIRE HYDRANT
8. TFMR = TRANSFORMER
9. PP = POWER POLE
10. MH = MANHOLE
11. DRN =DRAIN
12. IB IRRIGATION BOX
13. UB = UTILITY BOX
14. GW = GUY WIRE

TREE

PALM

PLUMERIA

SIDEWALK

CRM WALL

CONCRETE PAVEMENT

COCONUT

Marc M. Siah & Associates, Inc.
Consulting Civil . Structural . Environmental & Ocean Engineers
810 S. Beretania Street, Suite 201, Honolulu, Hawaii 96813

FIG. 2-2 SITE PLAN
SCALE: 1"=60'

GRAPHIC SCALES:
60' 0 60' 120'
SCALE: 1" = 60'-0"

A series of nine geotechnical borings were collected by Weideg in 2006, prior to repair of walls fronting A and F buildings. The logs relating to borings no. 1 to no. 6, were taken at locations in front of Building F, both makai and mauka of the new wall, indicate presence of "tan to bluff, moist, loose, and very fine to medium, poorly graded, coralline, slightly silty fill" In contrast, borings no.7 to no. 9, taken makai side of building A, indicate "clayey silt, grey-brown, moist, medium stiff with scattered fine to medium, sub-angular, weathered basaltic gravel" to a depth of 5 feet below the ground. This material is underlain by grey- brown and highly fractured basalt to the bottom of the boring.

2.4 Flora

The open space and grounds encompass two entrance driveways, and six parking lots. The rest of the area is grassed and landscaped with ornamental plants and shrubs and palm trees. There is no endangered species of plants on the property.

2.5 Existing Drainage Infrastructure

The existing drainage infrastructure on the property consists of drain lines of various sizes, drain inlets, drywells, storm drain manholes, and cobble-lined drainage channels which are located at strategic locations throughout the development to intercept, collect and convey storm runoff by means of a 36-inch outfall and several other smaller drainage pipes into the Keonenui Bay.

Historically, the location of the property has dictated it to be the natural terminus of all upland surface runoff before entering the bay. This flow has included runoff generated on the road Right-of-Way as well as adjacent properties along the mauka side of the Lower Honoapiilani Road, including the Napili Villas development. The storm drain infrastructure in Napili Villas was originally constructed to include two retention/detention basins as the back bone of the system with the capacity to contain and hold storm runoff volumes generated on the entire development during 10-year design storms. During severe storms and emergencies, however, a

spillway system was also devised and constructed to allow occasional overflow from these two retention/detention basins to flow via a 24-inch storm drain/culvert traversing the Lower Honoapiilani Road, into a dry-well/intake structure located on Kahana Sunset property, on its way towards its terminus at the beach, adjacent to the barbeque pavilion in Kahana Sunset. In short, after completion of the Napili Villas development, the unobstructed and direct overland flow from upland areas entering the Kahana Sunset, was limited to only the surface flow generated on the lower Honoapiilani Road Right-of-Way. A drainage report prepared as part of the Maui County Department of Public Works project, "Lower Honoapiilani Road Improvements, Phase 4", estimates this overland flow within the road Right-of-Way, between Baseline Road Stations, BL Rd. Sta. 143+00 and 155+00, at 9.12 cfs, which enters into the existing Kahana Sunset drainage system at two discharge points. These point connections include existing storm drain inlets in the roadway right-of-way and a 24-inch drain pipe which directs the flow to an existing Kahana Sunset storm drain manhole located between Building C and D. The inlets are in a state of disrepair and are not adequately maintained to efficiently handle storm runoff from the road right-of-way. Stray and unmitigated roadway storm runoff sheet flows overland and enters Kahana Sunset, which at times, has caused localized erosion and property damage. According to the County of Maui Department of Public Works, the existing roadway storm drainage infrastructure, are to be upgraded in near future as part of the Lower Honoapiilani Road Improvements, Phase 4, Project.

In addition to accommodating storm flow pass through from Honoapiilani Road Right-of-Way, The Kahana Sunset Storm Drain System, also receives unknown quantities of emergency storm water overflows from the Napili Villas. Although the exact amount of emergency flow has not been quantified, however, the capacity of the 24-inch culvert, draining into the Kahana Sunset Drainage System, has been estimated at 44 cfs.

In other words, the Kahana Sunset Storm Drain infrastructure not only accommodates on-site generated storm flows, but it also receives off-site flows from county right-of-way estimated at

9.12 cfs as well as a maximum of 44 cfs emergency storm runoff overflow from Napili Villas development.

On-site storm water collection and conveyance system in Kahana Sunset, consists of various means of flows diversion, collection and conveyance, ranging from swales to open channels, drain pipes, inlets, manholes, and a 36-inch outfall. In general, storm runoff generated in open planted areas with bare soil mostly infiltrate into the ground. Over flows from these areas, join the overland sheet flow in the central open and grassed yard, the flows from roofs' down spouts, at times channelized or sheet flow on the paved roadways and parking, are all directed towards various inlets and intake structures constructed within the property, before they ultimately discharge into the bay via the 36-inch outfall. Surface flow patterns and various inlets and other drainage facilities and details at project site, are depicted in Figure 2-3 and Figure 2-4. In summary and as indicated the infrastructure includes, eight drain lines of various sizes ranging from 6-inch to 36-inch, four storm drain manholes, one intake/dry well, two 24-inch wide rectangular cobbled open channels, several swales collecting and diverting roof runoffs to various inlets, more than 12 drain inlets and a series of 4-inch drain pipes which mostly drain the lawn/lanai areas makai of Buildings A and F.

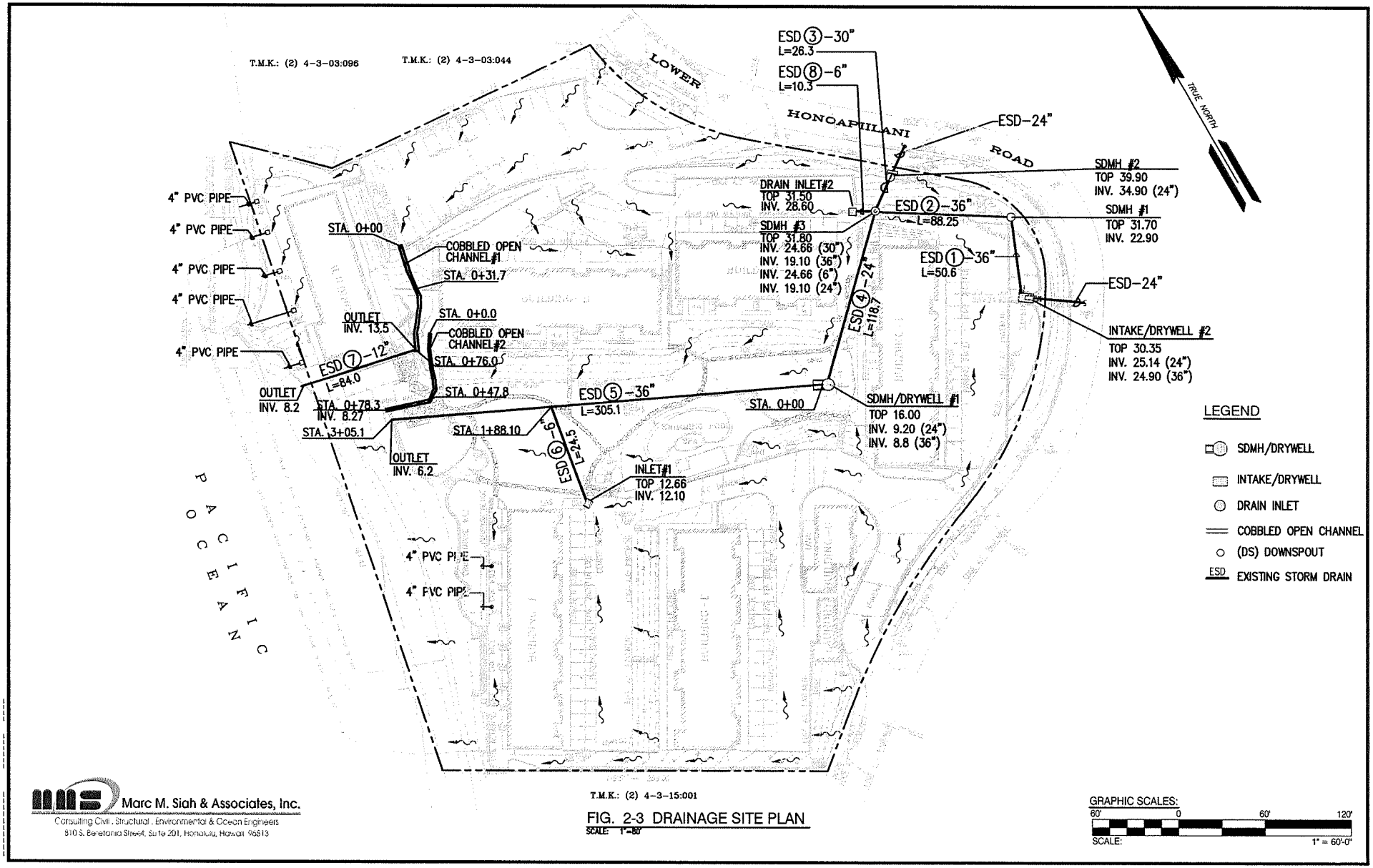

T.M.K.: (2) 4-3-15:001

FIG. 2-3 DRAINAGE SITE PLAN

SCALE: 1"=80'

GRAPHIC SCALES:

60' 0 60' 120'

SCALE: 1" = 60'-0"

Marc M. Siah & Associates, Inc.
Consulting Civil . Structural . Environmental & Ocean Engineers
810 S. Beretania Street, Suite 201, Honolulu, Hawaii 96813

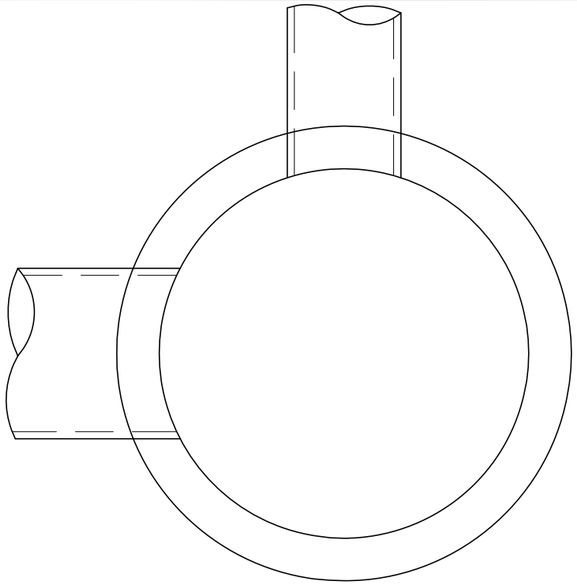

PLAN-SDMH/DRYWELL #1
SCALE: 3/8"=1"-0"

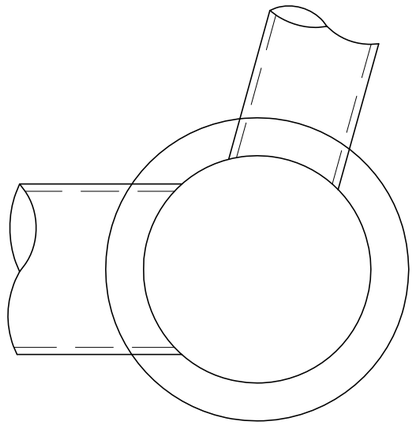

PLAN-SDMH/DRYWELL #2
SCALE: 3/8"=1"-0"

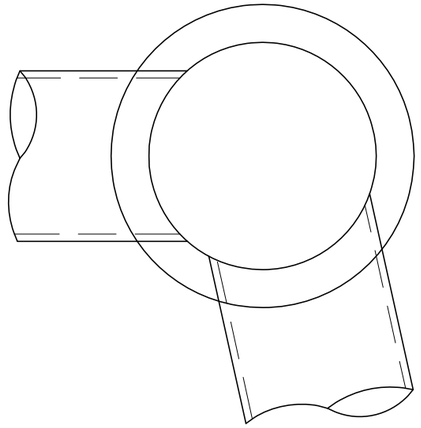

PLAN-SDMH #1
SCALE: 3/8"=1"-0"

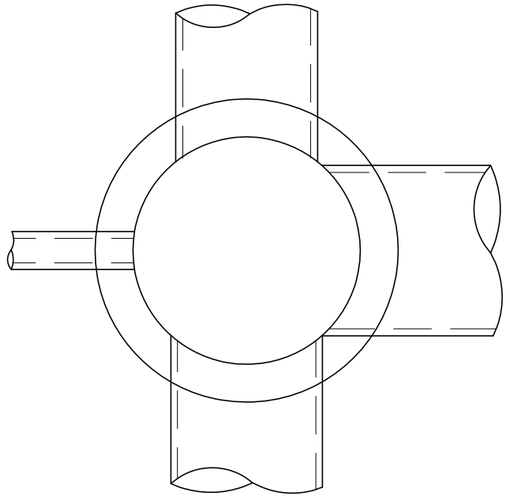

PLAN-SDMH #3
SCALE: 3/8"=1"-0"

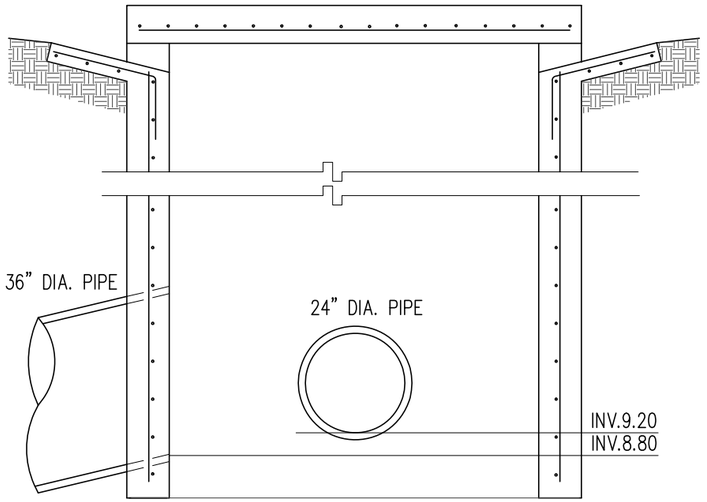

SECTION-SDMH/DRYWELL #1
SCALE: 3/8"=1"-0"

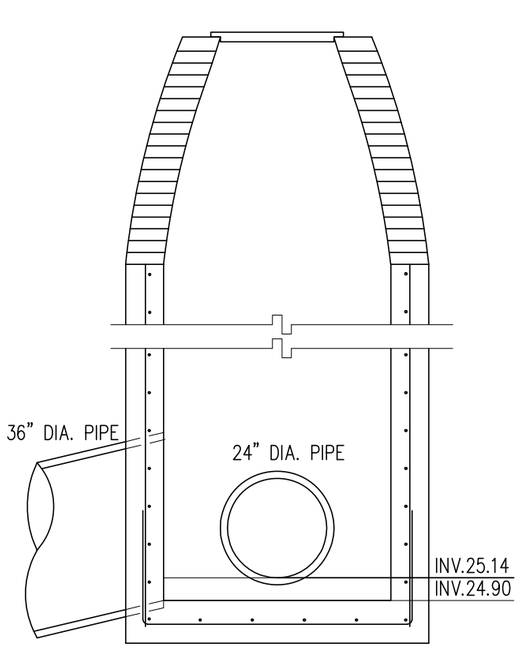

SECTION-INTAKE/DRYWELL #2
SCALE: 3/8"=1"-0"

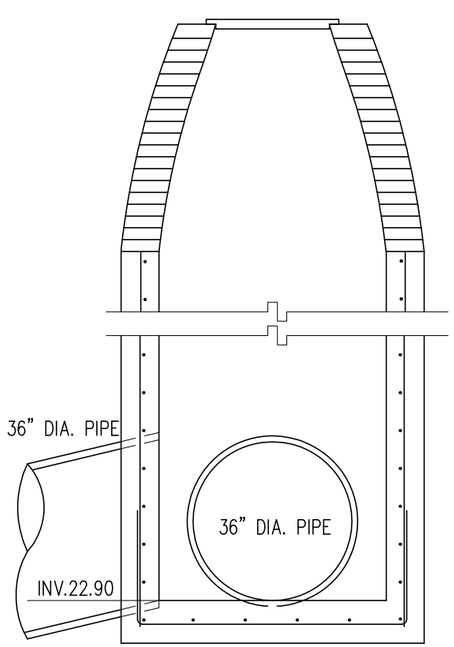

SECTION-SDMH #1
SCALE: 3/8"=1"-0"

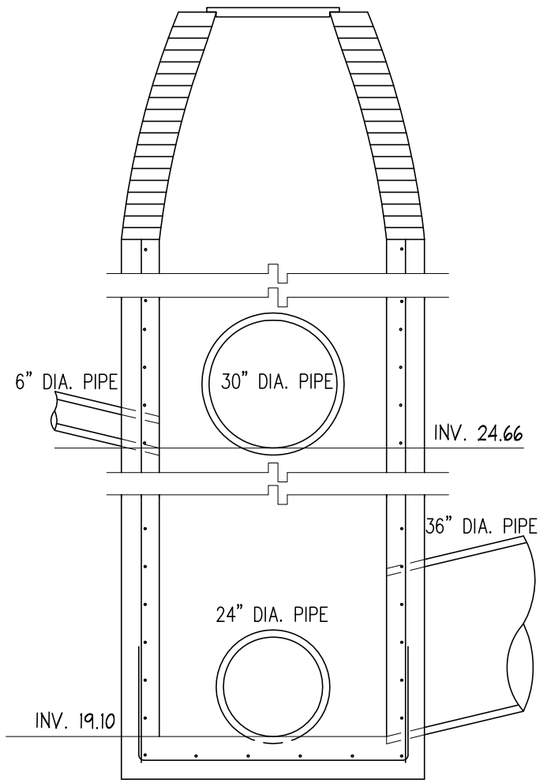

SECTION-SDMH #3
SCALE: 3/8"=1"-0"

Marc M. Siah & Associates, Inc.
Consulting Civil . Structural . Environmental & Ocean Engineers
810 S. Beretania Street, Suite 201, Honolulu, Hawaii 96813

FIG. 2-4 STORM DRAIN MANHOLE DETAILS
SCALE: AS NOTED

SECTION 3.0

DRAINAGE ANALYSIS

Marc M. Siah & Associates, Inc.

Consulting Civil • Structural • Environmental & Ocean Engineers
820 South Beretania Street, Suite 201, Honolulu, Hawaii 96813

SECTION 3.0

DRAINAGE ANALYSIS

This section presents the methodology used for hydrological analysis of the site and presents the results of this analysis for the existing conditions at the site in contrast to the future conditions when proposed improvements at beach front are constructed. The modification proposed, mostly deal with repair and realignment of existing seawalls, and reconfiguration of the beach.

3.1 Background

As mentioned in the previous sections, in order to address the failure of the retaining wall fronting the BBQ stand, the Kahana Sunset AOAO, has commissioned preparation of a project Master Plan which proposes repair and modifications to existing protective seawalls, and removal of non-complying structures on the property. The AOAO is also, in the process of applying for a shoreline setback variance which is necessary to allow the proposed construction work. This drainage report analyzes and contrasts the existing drainage conditions with the future conditions when the proposed modifications and renovation are implemented in accordance with the project Master Plan.

3.2 Flood Hazard Designation

Flood Insurance Rate Maps (FIRM), are used to evaluate the potential for flooding at the Kahana Sunset Condominium Complex. Based on FIRM Map Index dated September 25, 2009, the project is located on the panel 1500030264E. Accordingly, the site encompasses three flood zone designations, namely, Zone X, Zone AE and Zone VE, as shown in Figure 3-1. The majority of the property lies in Zone X, which refers to an area outside of the 500-year flood plain. The beach front and a section of the ocean front yard, is located in AE Zone, which refers to area within 100-year flood plain with based flood determined at 17 feet. Zone VE which extends seaward of the beach, fronting the property, defines the limits of 100-year coastal flood plain with additional storm waves hazards and dangerous velocities.

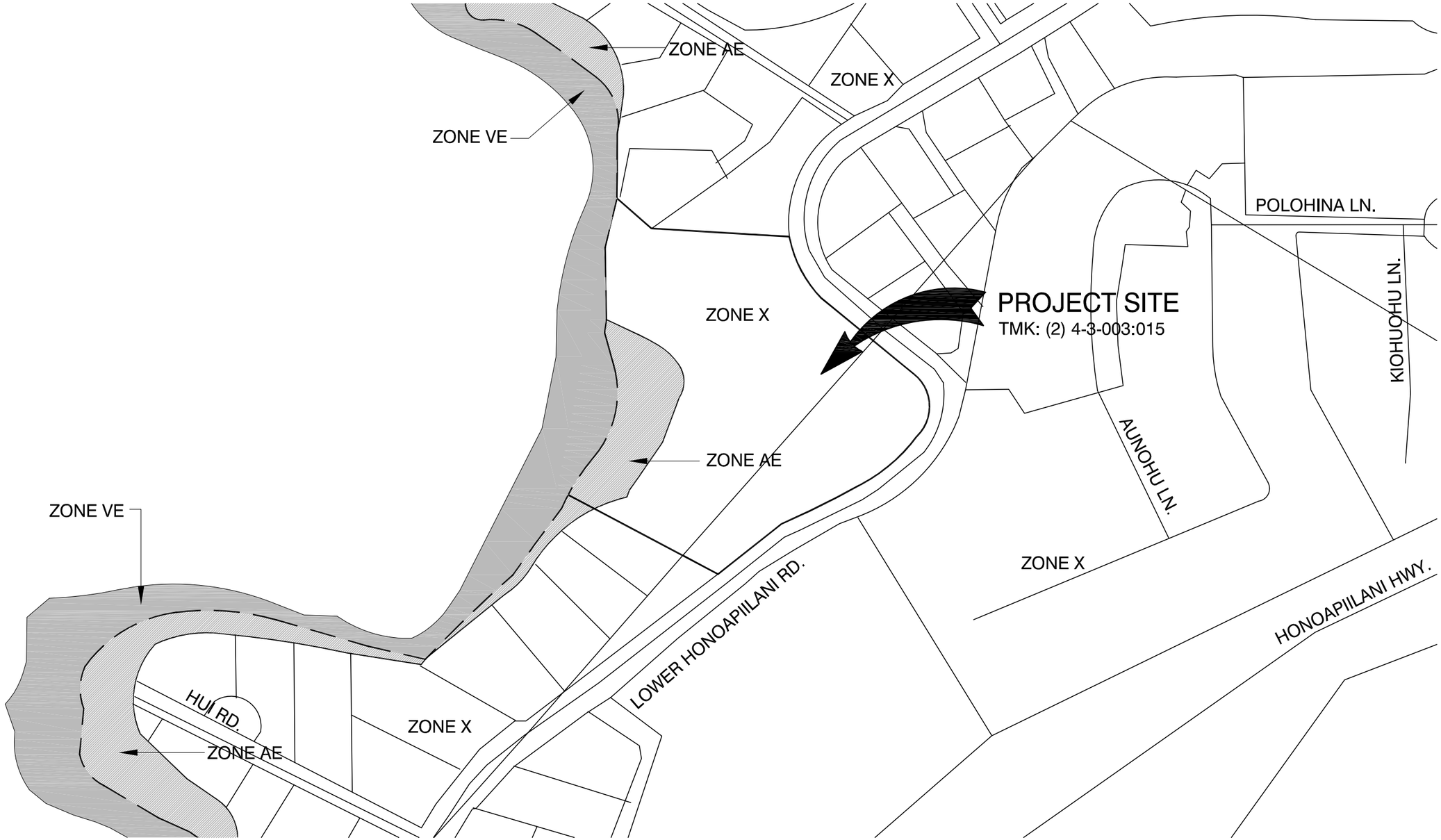

Marc M. Siah & Associates, Inc.
Consulting Civil . Structural . Environmental & Ocean Engineers
810 S. Beretania Street, Suite 201, Honolulu, Hawaii 96813

FIG. 3-1 FLOOD INSURANCE RATE MAP
SCALE: NONE

FLOOD INSURANCE RATE MAP
MAP NO. 1500030264E

3.3 Hydrologic Analysis

Two separate hydrologic analyses are performed in this report. The first, examines the existing drainage conditions at the site, and the second, examines the conditions at the site following the construction of the proposed modifications to the seawalls and reconfiguration of the ocean front of the property in accordance with the proposed project Master Plan. The two analyses are performed to discern the impact of project construction work on existing drainage conditions at the site and to determine whether drainage improvements are necessary. The analysis entails dividing the property into small sub-areas for which runoff quantities are calculated using a 10-year design storm and rational method in accordance with the Rules for the Design of Strom Drainage Facilities for the County of Maui.

3.3.1 Hydrologic Criteria

The hydrologic analyses of the existing and completed construction conditions are based upon several hydrologic criteria. The hydrologic criteria for the project site are developed through the use of the guidelines and design charts presented in the Title MC-15, department of Public Works, County of Maui, Chapter 4, Rules for the Design of Storm Drainage Facilities in the County of Maui (RDSDF). The hydrologic criteria are as follows:

1. A recurrence interval (Tm) of 10 years is used for each hydrologic analysis since the drainage area is less than 100 acres, without sumps or tailwater effects and do not involve the design of roadway culverts and bridges.
2. Runoff quantities are calculated using the Rational Method since the drainage area is less than 100 acres.
3. The Rational Method relates the peak discharge to the drainage area, the rainfall intensity and the runoff coefficient. The Rational Method is expressed as the equation:

$$Q = C * I * A,$$

Where Q = flow rate in cubic feet per second (ft3/s);

C = runoff coefficient;

I = rainfall intensity in inches per hour (in/hr) for a duration equal to the time of concentration (Tc); and

A = drainage area in acres.

4. For distinctive composite (nonhomogeneous) drainage areas, a weighted value of C is used. The weighted C value is determined through the equation:

$$C_w = \frac{\sum_{j=1}^{n} C_j \cdot A_j}{\sum_{j=1}^{n} A_j},$$

Where C_w = weighted runoff coefficient;

A_j = Sub-area for specific land cover j;

C_j = runoff coefficient for sub-area j; and

n = number of distinct land covers within Parcel.

5. The 1-hour rainfall value (RV 1-hour) is determined from Plate 4, 10–yr. 1-hr rainfall (in.), in the RDSDF. The RV 1-hour is calculated through linear interpolation of the isohedral lines on Plate 4.

   The overland flow time, or time of concentration (Tc) is determined through the use of Plate 1, a nomograph entitled Overland Flow Chart, from the RDSDF. This chart is used for land that is generally paved, bare soil or grassed.

   The Tc value, obtained from Plate 1, along with the 1-hour rainfall value from Plate 4, is used in Plate 2, to obtain the design rainfall intensity in inches per hour.

3.3.2 Hydrological Computations - Existing Conditions

The existing conditions at the development, is the basis for calculating the peak storm runoff on the property. The site plan presented in previous Section in Figure 2-2, represents the present conditions at the project site. The entire project area is subdivided into 18 subareas as delineated in Figure 3-2. Storm runoff quantities are then calculated for each sub area and allocated to specific drainage handling infrastructure such as drain intake, storm drain pipe, overland sheet flow, etc. The total runoff volume on the property is then calculated by summing the flows from each subarea. A brief description of each sub area is presented in the following paragraphs.

Subarea No. 1, encompasses part of the lower entrance drive way which is entirely paved with slopes ranging between 7 to 10 percent. Storm runoff in this subarea sheet flows into subarea no. 14, and collected by drain inlet # 1.

Subarea No. 2, encompasses building D and the paved parking lot east of the building. There is a bare strip of soil with shrubs and flower plants on the north end of Building D. Storm runoff in this subarea consists of roof runoff collect by down spouts on both ends of the building and sheet flow on paved surface of the parking area, towards Intake/drywell No. 1.

Subarea No. 3, refers to a strip of bare soil with plans and palm trees sandwiched between the Lower Honoapiilani Road Right-of-Way and the parking area for Building D. Surface runoff that does not infiltrate the soil in this subarea, either directly sheet flows into intake/drywell no.1, or enters Subarea No. 2 before discharging into intake/dry well no.1.

Subarea No. 4, is also a strip of planted land directly north of Buildings D and C, and enclosed between the Lower Honoapiilani Road and the parking area for Building C. Surface runoff from this subarea sheet flows into subareas No. 2 and No. 5.

SUBAREA TABULATION		
SUBAREA (1)	5,237.55 SF.	0.12 AC.
SUBAREA (2)	18,273.83 SF.	0.42 AC
SUBAREA (3)	4,035.94 SF.	0.09 AC.
SUBAREA (4)	5,842.07 SF.	0.134 AC.
SUBAREA (5)	5,562.05 SF.	0.127 AC.
SUBAREA (6)	2,792 SF.	0.064 AC.
SUBAREA (7)	12,478.64 SF.	0.28 AC.
SUBAREA (8)	6,151.68 SF.	0.14 AC.
SUBAREA (9)	3,232.14 SF.	0.074 AC
SUBAREA (10)	13,644.35 SF.	0.31 AC
SUBAREA (11)	49,959.78 SF.	1.15 AC.
SUBAREA (12)	12,897.25 SF.	0.3 AC.
SUBAREA (13)	15,148 SF.	0.35 AC.
SUBAREA (14)	29,454 SF.	0.68 AC
SUBAREA (15)	3,002.88 SF.	0.068 AC.
SUBAREA (16)	1,917.45 SF.	0.04 AC.
SUBAREA (17)	4,617.27	0.10 AC.
SUBAREA (18)	466.33 SF.	0.01 AC.
TOTAL	194,713.2 SF.	4.47 AC.

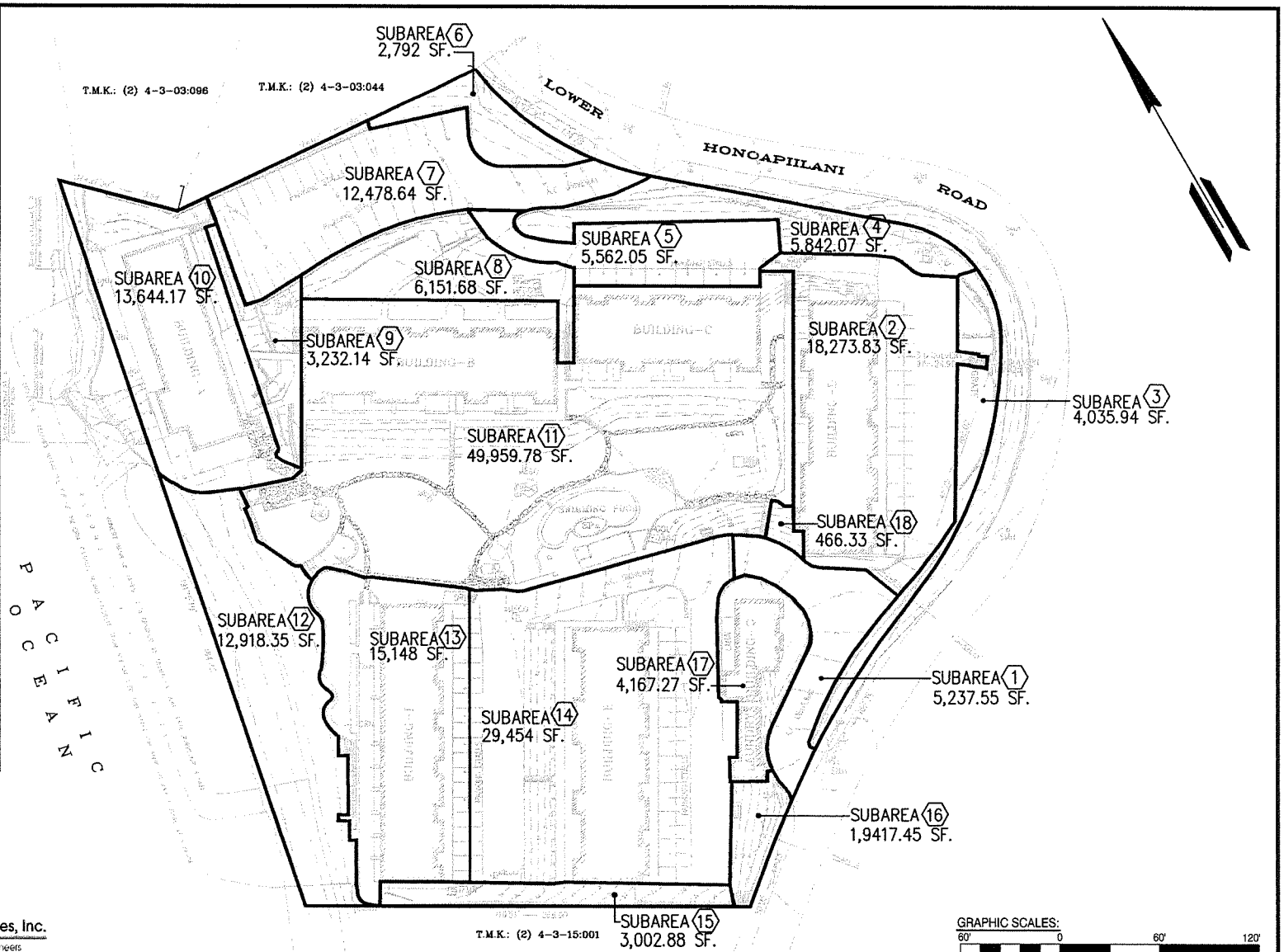

Marc M. Siah & Associates, Inc.
Consulting Civil . Structural . Environmental & Ocean Engineers
810 S. Beretania Street, Suite 201, Honolulu, Hawaii 96813

FIG. 3-2 SUBAREA DELINIATION FOR STORM RUN OFF CALCULATIONS - EXISTING CONDITIONS

SCALE: 1"=60'

GRAPHIC SCALES:
60' 0 60' 120'
SCALE: 1" = 60'-0"

Subarea No. 5, consists mainly of the paved parking lot of Building C. Storm runoff in this subarea sheet flows into the existing storm drain manhole, identified as SDMH #3, located in the paved area north of Buildings D and C.

Subarea No. 6, refers to a triangular patch of planted area enclosed by the perimeter fence and the entrance driveway into parking lots of Buildings A, B and C. the patch has a steep slope of about 15 percent. Excess runoff generated in this subarea, and not absorbed by the bare soil, overflows into Subarea No. 7.

Subarea No. 7, is the entire paved driveway and parking lot north of Building B. All storm runoff in this subarea sheet flows south westerly to the drain pipe which conveys the surface flow into the 24-inch wide cobbled drainage channel #1, between Buildings A and B. The channel delivers the flow to the 12-inch storm drain line # 7, which traverses under Building A day lighting on the makai face of the retaining wall fronting Building A.

Subarea No. 8, refers to the landscaped area containing grass and various ornamental plants which is enclosed by Subarea No. 5, Building B and Subarea No. 7. Runoff in this area if not totally absorbed by the soil, sheet flows easterly entering Subarea No. 11, between Buildings B and C.

Subarea No. 9, is the steeply sloped and heavily vegetated space between Buildings A and B. Runoff from this subarea is collected by an existing cobbled open channel which has its outlet adjacent to the 36-inch outfall pipe makai of the barbeque/shower pavilion.

Subarea No. 10, encompasses building A and the open lawn areas to the north and west of it. Roof runoff via down spouts and the sheet flow on open grassed areas, flow into four drain inlets located on the makai side of Building A. All these inlets are piped into the bay by 4-inch PVC drain lines.

Subarea No. 11, refers to the open central section of the development with an area of about 1.15 acres. Its boundaries are defined by building D on the east, buildings C and B on the north, beach area on the west and the entrance roadway on the south. With the exception of buildings B and C, a pool, a pump house, restroom facilities and the shower and the barbeques pavilion, the subarea is open and landscaped with lawn and ornamental flowers, trees, shrubs, hedges and meandering walkways. The open space is gently sloped directing storm runoff, including that from the roofs of Building B and C, to sheet flow towards the central intake structure/dry well or towards the beach.

Subarea No 12, consists of the entire beach area makai of existing seawalls. There is no significant runoff generated in this subarea.

Subarea N. 13, encompasses Building F and the open grassed and tiled areas to the north and makai of it. Roof runoff and surface sheet flow from this subarea enter an existing drain inlet no. 1, in northwest corner of the parking lot adjacent to Building F. An existing 6-inch drain line conveys the flow form this inlet into the main 36-inch line outfall traversing Subarea 11 on its way to the outlet at the beach.

Subarea No. 14, encompasses the paved parking area for Building F on the east, paved main drive way to the north, and Building E and its parking lot. The runoff from the paved surfaces combined with the flow from the building roofs, sheet flow over paved surfaces towards the drain inlet no. 1, at the north west corner of the subarea. There is a small patch of bare soil with plants north of Building E included in this subarea.

Subarea No. 15, refers to sloping strip of land running westerly along the southern perimeter fence. The strip includes bare soil with plants and a few ornamental shrubs and trees. Runoff in this subarea is mostly absorbed by bare soil or sheet flows into subarea 14.

Subarea No. 16, refers to a small patch of sloping land with bare soil and a few plants, enclosed by perimeter fence along L. Honoapiilani Road on the east, the Laundry building, and parking lot of Building E. Storm runoff in this area is mostly absorbed by the bare soil and the overflow enter subarea 15.

Subarea 17, encompasses the manager' residence and its open yard and the laundry room and offices sandwiched between the Lower Honoapiilani Road, entrance driveway and the parking lot of Building F. Flows generated on the roofs of the structures combined with surface flow in this area, sheet flows into subarea No. 15.

And Finally Subarea No. 18, is a small patch of sloping land enclosed by entrance driveway, Building D and subarea 11. Surface runoff in this area, if not totally absorbed by bare soil, will over flow into subarea No. 11.

Peak storm runoff on the property representing the existing conditions is computed based on summation of peak flows calculated for each of the 18 subareas comprising the entire development. The runoff coefficient, C-factor, and time of concentration, $T_{c,}$ for each subarea are estimated based on composition and nature of surface cover, roof structure, paved, gravel or grass, surface area and slope. For areas comprised of different ground covers a weighted C-factor representing contribution of different surface covers, is used. The one-hour 10-year storm rainfall, in inches, is used to determine the rainfall intensity, in inches per hour, in each subarea and to calculate peak storm runoff generated in each subarea for the existing conditions. Detail storm runoff calculations are presented in Appendix A, and a summary of the results is presented in Table 3-1. Accordingly, total storm runoff generated on-site is calculated at 11.53 cfs. In addition to this flow, extraneous off-site flows entering the Kahana Sunset' storm drain infrastructure, include 9.12 cfs from County's L. Honoapiilani Road Right-of-Way, and unspecified quantity from the Napili Villas and makai properties. In an agreement between the County and Kahana Sunset AOAO, this quantity has been agreed to a maximum of

Table 3-1 Summary of Drainage Calculation Results for the Existing Conditions

Subarea	C-factor[1]	Area (Acres)	Runoff Generated by 10-year Storm (ft^3/sec)
$Area_1$	0.9	0.12	0.39
$Area_2$	0.93	0.419	1.28
$Area_3$	0.4	0.093	0.14
$Area_4$	0.4	0.134	0.20
$Area_5$	0.9	0.128	0.39
Area6	0.4	0.064	0.08
$Area_7$	0.9	0.286	0.94
$Area_8$	0.35	0.141	0.19
$Area_9$	0.4	0.074	0.12
$Area_{10}$	0.67	0.313	0.79
$Area_{11}$	0.57	1.147	3.39
$Area_{12}$	0.05	0.296	0.05
$Area_{13}$	0.86	0.348	0.78
$Area_{14}$	0.92	0.676	2.36
$Area_{15}$	0.4	0.069	0.11
$Area_{16}$	0.4	0.044	0.06
$Area_{17}$	0.69	0.106	0.25
$Area_{18}$	0.4	0.011	0.01
	TOTAL ON SITE RUNOFF	**4.47**	**11.53**

[1] C-factor for subareas with multiple cover surfaces, is the weighted C-factor for that area

44 cfs as dictated by the capacity of the existing 24-inch culvert. In other words, the total off-site storm runoff entering into the Kahana Sunset drainage system can reach as high as 53.12 cfs. The total combined potential runoff from Kahana sunset, including off-site flow, discharging into the Keonenui Bay via the existing 36-inch outfall is 64.65 cfs.

3.3.3 Hydrological Computations – Future (Finished) Conditions

Similar to the existing conditions, storm runoff flows are computed for the future (finished) conditions of the property based on the proposed Master Plan as depicted in Figure 3-3. The new subarea delineation based on the Master Plan is presented in Figure 3-4.

According to this Master Plan, two new flanking walls will be constructed to better delineate and protect the living quarters and the recreational areas from the beach area. It also includes realignment and improvement of the transition area from the on-site open and landscaped grounds and swimming pool to the beach. According to the proposed improvements, the beach area will be extended further into the on-site open space and will be demarcated by the two flanking walls and a semi-circular steps delineating the sandy beach from the landscaped grounds. The new plans also call for demolition of the remainder of the meandering wall fronting Building F, which was severely damaged and eroded during the last storm and was replaced by a new wall further landward of the old wall.

In this fashion the extent of the future beach area represented as Subarea No. 12, will be expanded while that of subarea No. 11 and Subarea No. 13 will reduce. In other words, according to the development plan, in the future, the sandy beach area due to its nature of highly permeable ground cover, albeit a little larger in extent than at present, contributes little to no amount of runoff, while the runoff from Subarea No. 11 and Subarea No. 13 will decrease, from its present conditions, due to reduction in their aerial extents. The rest of the subareas constituting the totality of the development will remain the same. This means that total storm

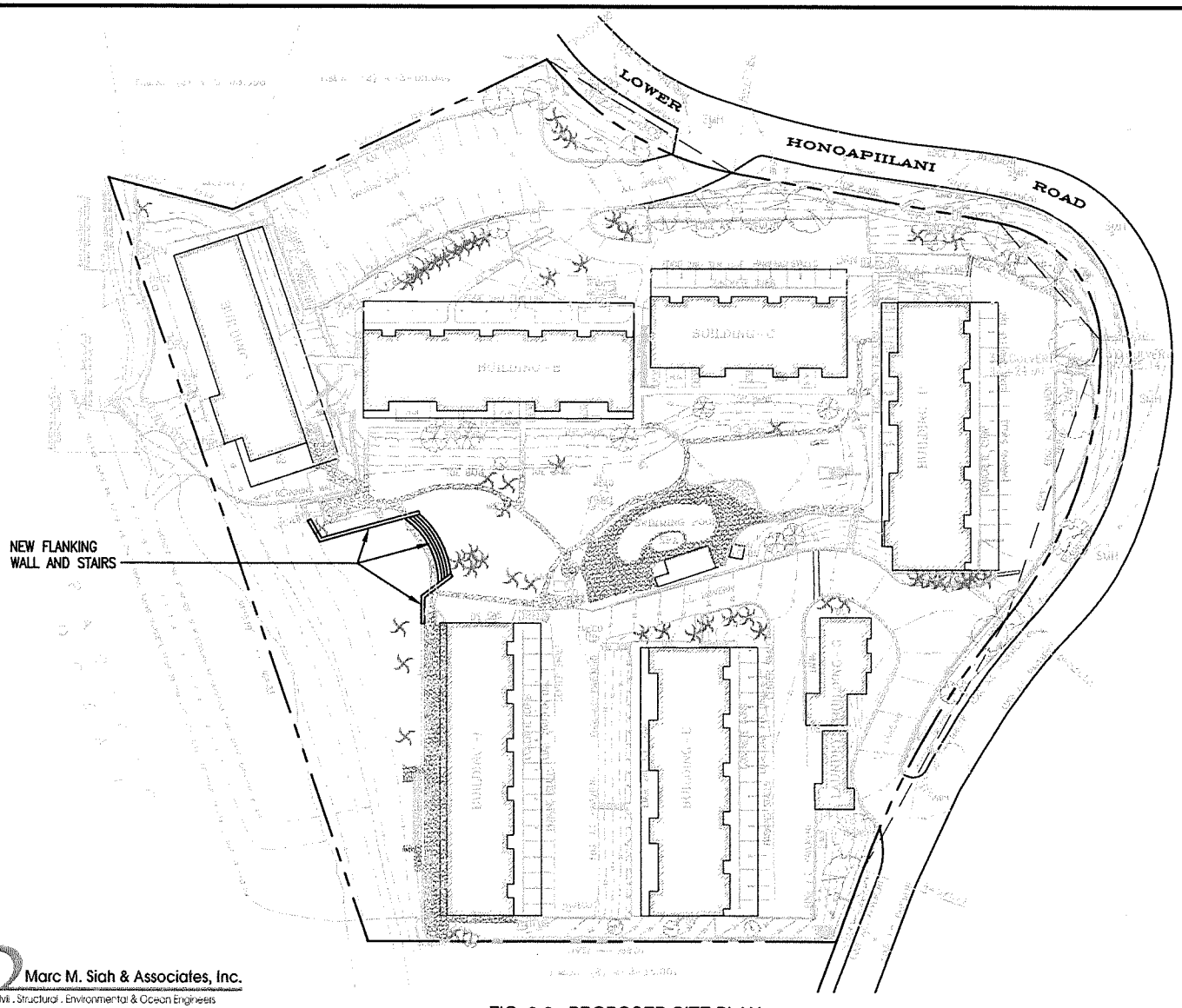

TRUE NORTH

LEGEND:

1. WM = WATER METER
2. WV = WATER VALVE
3. ICV = IRRIGATION CONTROL VALVE
4. SMH = SEWER MANHOLE
5. SDMH = STORM DRAIN MANHOLE
6. LP = LIGHT POST
7. FH = FIRE HYDRANT
8. TFMR = TRANSFORMER
9. PP = POWER POLE
10. MH = MANHOLE
11. DRN =DRAIN
12. IB IRRIGATION BOX
13. UB = UTILITY BOX
14. GW = GUY WIRE

TREE

PALM

PLUMERIA

SIDEWALK

CRM WALL

CONCRETE PAVEMENT

COCONUT

GRAPHIC SCALES:

60' 0 60' 120'

SCALE: 1" = 60'-0"

Marc M. Siah & Associates, Inc.
Consulting Civil . Structural . Environmental & Ocean Engineers
510 S. Beretania Street, Suite 201, Honolulu, Hawaii 96813

FIG. 3-3 PROPOSED SITE PLAN

SCALE: 1"=80'

SUBAREA TABULATION

SUBAREA (1)	5,237.55 SF.	0.12 AC.
SUBAREA (2)	18,273.83 SF.	0.42 AC
SUBAREA (3)	4,035.94 SF.	0.09 AC.
SUBAREA (4)	5,842.07 SF.	0.134 AC.
SUBAREA (5)	5,562.05 SF.	0.127 AC.
SUBAREA (6)	2,792 SF.	0.064 AC.
SUBAREA (7)	12,478.64 SF.	0.28 AC.
SUBAREA (8)	6,151.68 SF.	0.14 AC.
SUBAREA (9)	3,232.14 SF.	0.074 AC
SUBAREA (10)	13,644.35 SF.	0.31 AC
SUBAREA (11)	47,438.49 SF.	1.1 AC.
SUBAREA (12)	17,952.64 SF.	0.41 AC.
SUBAREA (13)	12,635 SF.	0.3 AC.
SUBAREA (14)	29,454 SF.	0.68 AC
SUBAREA (15)	3,002.88 SF.	0.068 AC.
SUBAREA (16)	1,917.45 SF.	0.04 AC.
SUBAREA (17)	4,617.27	0.10 AC.
SUBAREA (18)	466.33 SF.	0.01 AC.
TOTAL	194,713.2 SF.	4.47 AC.

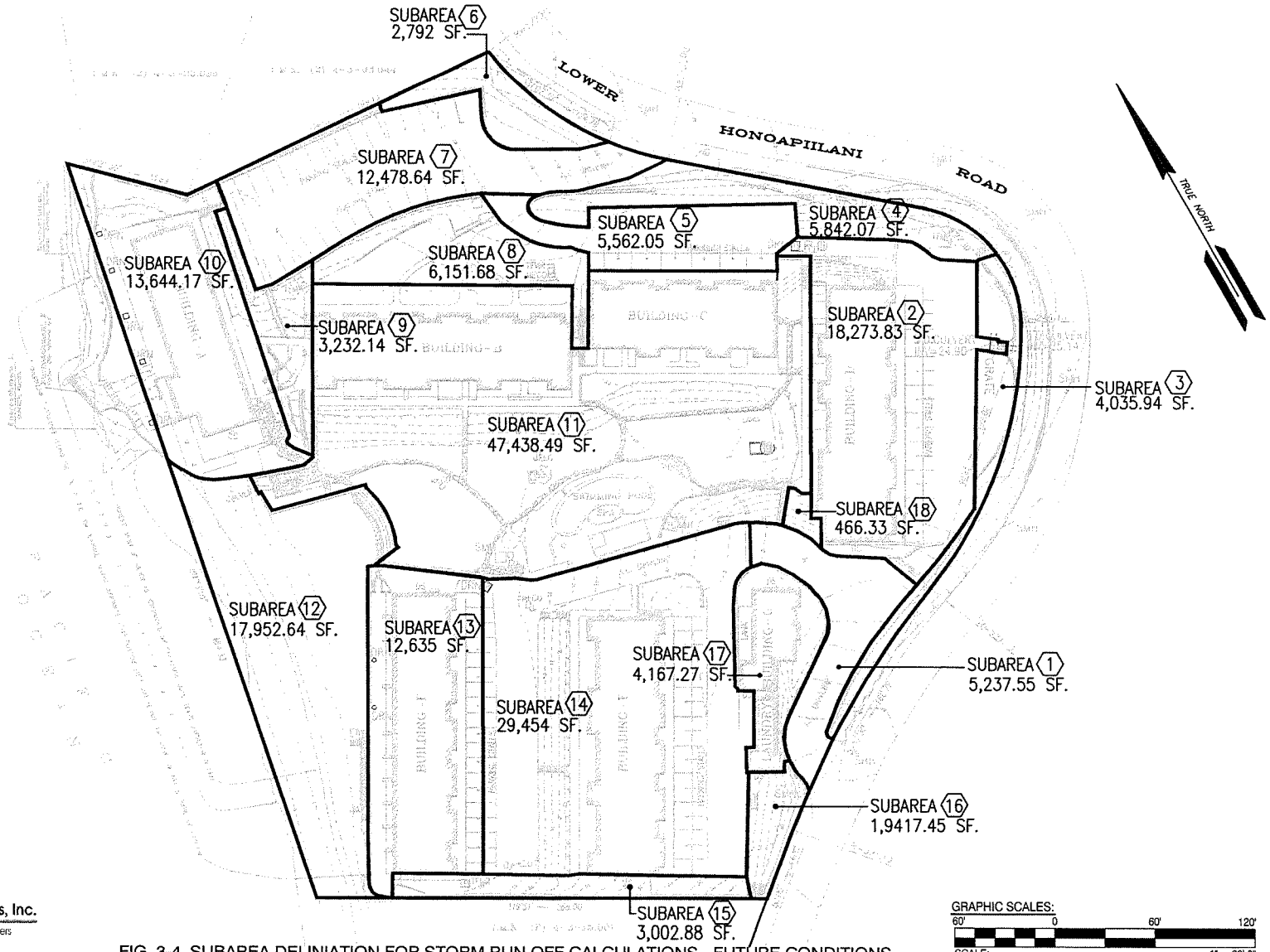

FIG. 3-4 SUBAREA DELINIATION FOR STORM RUN OFF CALCULATIONS - FUTURE CONDITIONS
SCALE: 1"=80'

Marc M. Siah & Associates, Inc.
Consulting Civil . Structural . Environmental & Ocean Engineers
810 S. Beretania Street, Suite 201, Honolulu, Hawaii 96813

runoff generated on the property will reduce from 11.53 cfs to 11.35 cfs, which amounts to about one and half percent reduction, as validated by calculations summarized in Table 3-2.

Table 3-2 Summary of Drainage Calculation Results for the Future (Finished) Condition

Subarea	C-factor[1]	Area (Acres)	Runoff Generated by 10-year Storm (ft^3/sec)
$Area_1$	0.9	0.12	0.39
$Area_2$	0.93	0.419	1.28
$Area_3$	0.4	0.093	0.14
$Area_4$	0.4	0.134	0.20
$Area_5$	0.9	0.128	0.39
Area6	0.4	0.064	0.08
$Area_7$	0.9	0.286	0.94
$Area_8$	0.35	0.141	0.19
$Area_9$	0.4	0.074	0.12
$Area_{10}$	0.67	0.313	0.79
$Area_{11}$	0.58	1.090	3.30
$Area_{12}$	0.05	0.410	0.07
$Area_{13}$	0.89	0.290	0.67
$Area_{14}$	0.92	0.676	2.36
$Area_{15}$	0.4	0.069	0.11
$Area_{16}$	0.4	0.044	0.06
$Area_{17}$	0.69	0.106	0.25
$Area_{18}$	0.4	0.011	0.01
	TOTAL ON SITE RUNOFF	**4.47**	**11.35**

[1] C-factor for subareas with multiple cover surfaces, is the weighted C-factor for that area.

SECTION 4.0

DRAINAGE INFRASTRUCTURE ADEQUACY EVALUATION

Marc M. Siah & Associates, Inc.

Consulting Civil • Structural • Environmental & Ocean Engineers
820 South Beretania Street, Suite 201, Honolulu, Hawaii 96813

SECTION 4.0

DRAINAGE INFRASTRUCTURE ADEQUACY EVALUATION

In this section adequacy of the existing drainage infrastructure at Kahana Sunset Condominium Complex is evaluated.

4.1 Existing Facilities and Hydraulic Calculations

The overall drainage concept in the development of Kahana Sunset is based on maximizing absorption of runoff on site by means of providing permeable surfaces such as lawn, and planting patches with bare soil, and drywells. The balance of surface runoff, not directly absorbed by ground surface, is then directed and conveyed by surface sheet flow, swales, open channels, drain inlets and drainage pipes, intro the Keonenui Bay. As mentioned in the previous section, storm runoff from off-site mauka properties as well as some flow generated on Lower Honoapiilani Road Right-of-Way, enter into the Kahana Sunset drainage infrastructure prior to disposal via a 36-inch outfall into the Bay. The contribution of Kahana Sunset storm flow to the total runoff discharge into the bay is 11.53 cfs. In contrast, off-site flow traversing the development, can reach as high as 53.12 cfs. In other words, storm runoff discharge from Kahana Sunset could be as low as 17.8% of total discharge into the bay.

A series of computer simulations are performed to determine depths of flow in various existing on-site drain pipes and cobbled channels and the velocities which could be expected in each. Details of these calculations are presented in Appendix B. A summary of hydraulic parameters for each storm drain pipe and channel are presented in Table 4-1.

Accordingly, all drain pipes with the exception of Drain line # 6, in Kahana Sunset Drainage system, are adequate to conveys potential runoff flows from their tributary areas. However, storm drain line No. 6, which conveys storm runoff collected by the inlet # 1, located at the north east corner of Building F, is inadequate. The calculations further confirms the observation by the residents of Kahana Sunset Condominium, that during severe storm events, the inlet # 1,

over flows and floods the area. Based on these calculations presented in Appendix B, replacing, the existing 6-inch line with an 8-inch drain line will alleviate the flooding in the area.

Table 4-1 Hydraulic Parameters for Strom Drain Pipes and Channels

Component of Drainage System	Length (Feet)	Diameter/Width (Inches)	Slope (ft/ft)	Flow rate (cfs)	Depth (Inches)
Storm Drain Line # 1	50.60	36	0.0395	45.42	14.64
Storm Drain Line # 2	88.25	36	0.043	45.42	14.16
Storm Drain Line # 3	26.30	30	0.389	9.12	3.84
Storm Drain Line # 4	118.7	24	0.083	55.13	16.92
Storm Drain Line # 5:					
Sta. 0+00 to Sta. 1+88.1	188.10	36	0.008	55.13	27.36
Sta. 1+88.1 to Sta. 3+05.1	117.00	36	0.008	59.08	29.16
Storm Drain Line # 6	24.50	6	0.213	3.95	7.00[1]
Storm Drain Line # 6	24.50	8	0.213	3.95	5.00
Storm Drain Line # 6	24.50	10	0.213	3.95	4.30
Storm Drain Line # 7	84.00	12	0.063	1.02	2.70
Strom Drain Line # 8	10.3	6	0.388	0.59	1.70
Cobbled Open Channel # 1:					
Sta. 0+00 to Sta. 0+31.7	31.7	24	0.346	1.02	0.24
Sta. 0+31.7 to Sta. 0+76	44.3	24	0.19	1.02	0.36
Cobbled Open Channel # 2:					
Sta. 0+00 to Sta. 0+47.8	47.80	24	0.123	0.12	0.12
Sta. 0+47.8 to Outlet	30.50	24	0.118	3.59	0.72

[1] indicates that 6-inch pipe is inadequate.

The 24-inch storm drain line, SDL #4, which connects SDMH # 3 located in the paved area between Buildings C and D to the main SDMH/ Dry Well # 1, in the central open space, although has the capacity to convey the potential runoff form it's contributory areas, it creates a bottle neck in the system. During major storm events, when contribution from Napili Villas development and runoff from roadway right-of-way are the highest, this storm drain flows 70.56 percent full. The velocities in this line would reach as high as 23.26 fps. The Hydraulic Grade Line, HGL, calculations show that the 24 inch line causes water levels in the upstream manhole, SDMH # 2, to rise to 26.68 feet level, merely less than five feet below the ground surface. The impact of high HGL reaches even to Intake/Dry Well # 2. In other words, during a very severe storm when, off-site flows reaching Kahana Sunset may become even larger than the anticipated 53.12 cfs, both SDMH # 2, and the Intake/Dry Well # 2, may overflow causing material damage to the development. Replacing this segment of drain line with a larger 30-inch or 36-inch line, would reduce flow velocities and alleviate hydraulic inadequacy of the system during sever events. It would further ensure that system will have excess capacity for conveyance of unanticipated and unusual off-site runoff volumes. The hydraulic calculations also indicate that the two cobble-lined open channels are more than adequate for conveyance of storm waters from their respective tributary areas.

4.2 Conclusions and Recommendations

Review of the findings of drainage analyses presented in this report, leads to the conclusion that, overall the drainage infrastructure in Kahana Sunset, albeit old, is adequate to receive, collect, convey and dispose of all on-site storm runoff as well as off-site discharges into the system with the exception of the storm drain line no. 6. By replacing this line with a larger pipe, i.e., an 8-inch storm drain, the system will adequately handle the drainage needs of the development. However, as the calculations indicate, the 24-inch storm drain no. 4 creates a bottle neck in the system and during unusually severe storm events, may cause flooding of the upstream manhole no. 2, and even the intake/dry well # 2.

DRAINAGE INFRASTRUCTURE ADEQUACY EVALUATION

Since the existing storm drain inlets in the Lower Honoapiilani Road right-of-way are not well maintained and in poor conditions, not all runoff generated on the roadway is collected and conveyed into the system. During severe storm events some of the roadway runoff will sheet flow along the length of the property bordering the roadway, entering into the development and causing erosion and potentially property damage. New planned drainage improvements by the Maui County will alleviate this shortcoming and eliminate potential flooding of the property. However, in the short term, and before these proposed improvements are installed, it is prudent to devise a mechanism for blockage and interception of overland flow from roadway right-of-way. Barricading the length of property line along the roadway with sand bags or installing a new intercepting ditch along the roadway shoulder parallel to the property line, are two temporary schemes for protecting the development from localized erosion due to unimpeded stray overland flow of roadway storm runoff into the property. Additionally, the alleged cracks in the section of the existing 24-inch culvert/drain pipe crossing under the Lower Honoapiilani Road, and the conveying storm run-off overflows from Napili Villas' detention/retention basins, into the Kahana Sunset system, needs to be verified. Upon verifications, the section shall either be repaired or replaced. Other improvements to on-site drainage infrastructure shall include:

a. Design and construction of a new terminus for the 36-inch storm drain/outfall, which daylights at the beach, makai of the existing shower/barbeque pavilion;
b. Installation of a new drain pipe and inlet to replace the inadequate storm drain no. 6, and drain inlet no. 1, which receive overland flows from paved drive way, and the parking areas of Buildings E and F;
c. Install a new drain inlet at the south-western corner of parking lot for Building A and B. The new inlet shall replace the existing pipe which conveys runoff from the paved parking area into the open channel no. 1., and is often blocked by leaves and extraneous materials, causing localized ponding;

d. Construct a new inlet at the terminus of Channel no. 1, to improve conveyance of channelized flow into the existing drain line no. 7, terminates along the face of the retaining wall fronting Building A;

e. Construct an intercepting channel with gratings, to be installed along the width of the lower driveway, at location(s) to be determined, in order to reduce potential hazards of slippery driveway. A new pipe shall be installed to connect the end of the intercepting channel to the new inlet no. 1;

f. Inspect and clean all existing on-site storm manholes, to ensure they are free of blockages and debris.

g. Retrofit and install filters in all on-site drain inlets, to capture sediments, debris and other pollutants before they enter the system and ultimately discharge into the bay.

APPENDICES

Marc M. Siah & Associates, Inc.

Consulting Civil • Structural • Environmental & Ocean Engineers
820 South Beretania Street, Suite 201, Honolulu, Hawaii 96813

APPENDIX A

Drainage Calculations

Marc M. Siah & Associates, Inc.

Consulting Civil • Structural • Environmental & Ocean Engineers
820 South Beretania Street, Suite 201, Honolulu, Hawaii 96813

EXISTING CONDITIONS: (Please refer to Figure 3-2)

Subarea No. 1:

$Area_1$ = 5237.55 sf = 0.12 Ac.
C = 0.90 From Table 2, Rules of the Design of Storm Drainage Facilities (RDSDF)
Δ Length = 180.00 ft.
Δ Height = 18.00 ft.
% Slope = 10.00
T_C = 16.80 min. From Plate 1, (RDSDF)
I = 3.61 in/hr. Rainfall Intensity from Plate 2, RDSDF
Q_{area1} = C*i*A = 0.9*3.61*0.12
= 0.39 cfs

Subarea No. 2:

$Area_2$ = 18273.83 sf = 0.42 Ac.
$A_{PAVEMENT}$ = 8086.17 sf = 0.19 Ac.
A_{ROOF} = 10187.66 sf = 0.23 Ac.
$C_{PAVEMENT}$ = 0.90 From Table 2, Rules of the Design of Storm Drainage Facilities (RDSDF)
C_{ROOF} = 0.95 From Table 2, Rules of the Design of Storm Drainage Facilities (RDSDF)
$C_W = (A_{ROOF}*C_{ROOF}+A_{PAVEMENT}*C_{PAVEMENT})/AREA_2$ = 0.93
Δ Length = 140.00 ft.
Δ Height = 6.50 ft.
% Slope = 4.64
T_C = 20.00 min. From Plate 1, (RDSDF)
I = 3.28 in/hr. Rainfall Intensity from Plate 2, RDSDF
Q_{area2} = C*i*A = 0.93*3.28*0.42
= 1.28 cfs

Subarea No. 3:

$Area_3$ = 4035.94 sf = 0.09 Ac.
C = 0.40 From Table 2, Rules of the Design of Storm Drainage Facilities (RDSDF)
Δ Length = 95.00 ft.
Δ Height = 10.89 ft.

% Slope = 11.46
T_C = 15.50 min. From Plate 1, (RDSDF)
I = 3.65 in/hr. Rainfall Intensity from Plate 2, RDSDF

820 S. Beretania Street ● Suite 201 ● Honolulu, HI ● Phone: (808) 538-7180 ● Fax: (808) 528-4352 ● Email: msiah@mmsengineering.com

Q_{area3} = C*i*A = 0.4*3.65*0.09
= 0.14 cfs

Subarea No. 4:

$Area_4$ = 5842.07 sf = 0.13 Ac.
C = 0.40 From Table 2, Rules of the Design of Storm Drainage Facilities (RDSDF)
Δ Length = 90.00 ft.
Δ Height = 16.14 ft.
% Slope = 17.93
T_C = 15.00 min. From Plate 1, (RDSDF)
I = 3.70 in/hr. Rainfall Intensity from Plate 2, RDSDF
Q_{area4} = C*i*A = 0.4*3.7*0.13
= 0.20 cfs

Subarea No. 5:

$Area_5$ = 5562.05 sf = 0.13 Ac.
C = 0.90 From Table 2, Rules of the Design of Storm Drainage Facilities (RDSDF)
Δ Length = 190.00 ft.
Δ Height = 6.50 ft.
% Slope = 3.42
T_C = 18.00 min. From Plate 1, (RDSDF)
I = 3.40 in/hr. Rainfall Intensity from Plate 2, RDSDF
Q_{area5} = C*i*A = 0.9*3.4*0.13
= 0.39 cfs

Subarea No. 6:

$Area_6$ = 2792 sf = 0.06 Ac.
C = 0.40 From Table 2, Rules of the Design of Storm Drainage Facilities (RDSDF)
Δ Length = 52.00 ft.
Δ Height = 10.18 ft.
% Slope = 19.58
T_C = 18.50 min. From Plate 1, (RDSDF)
I = 3.30 in/hr. Rainfall Intensity from Plate 2, RDSDF
Q_{area6} = C*i*A = 0.4*3.3*0.06
= 0.08 cfs

Subarea No. 7:

$Area_7$ = 12478.64 sf = 0.29 Ac.
C = 0.90 From Table 2, Rules of the Design of Storm Drainage Facilities (RDSDF)
Δ Length = 260.00 ft.
Δ Height = 15.00 ft.
% Slope = 5.77
T_C = 15.50 min. From Plate 1, (RDSDF)
I = 3.65 in/hr. Rainfall Intensity from Plate 2, RDSDF
Q_{area7} = C*i*A = 0.9*3.65*0.29
= 0.94 cfs

Subarea No. 8:

$Area_8$ = 6151.68 sf = 0.14 Ac.
C = 0.35 From Table 2, Rules of the Design of Storm Drainage Facilities (RDSDF)
Δ Length = 80.00 ft.
Δ Height = 8.24 ft.
% Slope = 10.30
T_C = 12.50 min. From Plate 1, (RDSDF)
I = 3.80 in/hr. Rainfall Intensity from Plate 2, RDSDF
Q_{area8} = C*i*A = 0.35*3.8*0.14
= 0.19 cfs

Subarea No. 9:

$Area_9$ = 3231.14 sf = 0.07 Ac.
C = 0.40 From Table 2, Rules of the Design of Storm Drainage Facilities (RDSDF)
Δ Length = 115.00 ft.
Δ Height = 18.33 ft.
% Slope = 15.94
T_C = 11.20 min. From Plate 1, (RDSDF)
I = 3.90 in/hr. Rainfall Intensity from Plate 2, RDSDF
Q_{area9} = C*i*A = 0.4*3.9*0.07
= 0.12 cfs

Subarea No. 10:

$Area_{10}$ = 13644.35 sf = 0.31 Ac.
A_{LAWN} = 5931.22 sf = 0.14 Ac.
A_{ROOF} = 7713.13 sf = 0.18 Ac.
C_{LAWN} = 0.30 From Table 2, Rules of the Design of Storm Drainage Facilities (RDSDF)
C_{ROOF} = 0.95 From Table 2, Rules of the Design of Storm Drainage Facilities (RDSDF)
$C_W = (A_{ROOF}*C_{ROOF}+A_{LAWN}*C_{LAWN})/AREA_{10}$= 0.67
Δ Length = 80.00 ft.
Δ Height = 10.36 ft.
% Slope = 12.95
T_C = 13.50 min. From Plate 1, (RDSDF)
I = 3.80 in/hr. Rainfall Intensity from Plate 2, RDSDF
Q_{area10} = C*i*A = 0.67*3.8*0.31
= 0.79 cfs

Subarea No. 11:

$Area_{11}$ = 49959.78 sf = 1.15 Ac.
A_{LAWN} = 29344.28 sf = 0.67 Ac.
A_{ROOF} = 20615.50 sf = 0.47 Ac.
C_{LAWN} = 0.30 From Table 2, Rules of the Design of Storm Drainage Facilities (RDSDF)
C_{ROOF} = 0.95 From Table 2, Rules of the Design of Storm Drainage Facilities (RDSDF)
$C_W = (A_{ROOF}*C_{ROOF}+A_{LAWN}*C_{LAWN})/AREA_{11}$= 0.57
Δ Length = 400.00 ft.
Δ Height = 19.96 ft.
% Slope = 4.99
T_C = 7.00 min. From Plate 1, (RDSDF)
I = 5.20 in/hr. Rainfall Intensity from Plate 2, RDSDF
Q_{area10} = C*i*A = 0.57*5.2*1.15
= 3.39 cfs

Subarea No. 12:

$Area_{12}$ = 12897.25 sf = 0.30 Ac.
C = 0.05 From Table 2, Rules of the Design of Storm Drainage Facilities (RDSDF)
Δ Length = 75.00 ft.
Δ Height = 12.10 ft.
% Slope = 16.13
T_C = 16.00 min. From Plate 1, (RDSDF)

I = 3.60 in/hr. Rainfall Intensity from Plate 2, RDSDF

Q_{area12} = C*i*A = 0.05*3.60*0.3

= 0.05 cfs

Subarea No. 13:

$Area_{13}$ = 15148 sf = 0.35 Ac.

$A_{TILE/PAV.}$ = 5376.54 sf = 0.12 Ac.

A_{ROOF} = 9771.46 sf = 0.22 Ac.

$C_{TILE/PAV.}$ = 0.70 From Table 2, Rules of the Design of Storm Drainage Facilities (RDSDF)

C_{ROOF} = 0.95 From Table 2, Rules of the Design of Storm Drainage Facilities (RDSDF)

$C_W = (A_{ROOF}*C_{ROOF}+A_{TILE/PAV.}*C_{TILE/PAV.})/AREA_{13}$ = 0.86

Δ Length = 60.00 ft.

Δ Height = 0.67 ft.

% Slope = 1.12

T_C = 33.00 min. From Plate 1, (RDSDF)

I = 2.60 in/hr. Rainfall Intensity from Plate 2, RDSDF

Q_{area13} = C*i*A = 0.86*2.6*0.35

= 0.78 cfs

Subarea No. 14:

$Area_{14}$ = 29454 sf = 0.68 Ac.

$A_{PAVEMENT}$ = 19080.36 sf = 0.44 Ac.

A_{ROOF} = 10373.64 sf = 0.24 Ac.

$C_{PAVEMENT}$ = 0.90 From Table 2, Rules of the Design of Storm Drainage Facilities (RDSDF)

C_{ROOF} = 0.95 From Table 2, Rules of the Design of Storm Drainage Facilities (RDSDF)

$C_W = (A_{ROOF}*C_{ROOF}+A_{PAVEMENT}*C_{PAVEMENT})/AREA_{14}$ = 0.92

Δ Length = 320.00 ft.

Δ Height = 26.65 ft.

% Slope = 8.33

T_C = 13.10 min. From Plate 1, (RDSDF)

I = 3.80 in/hr. Rainfall Intensity from Plate 2, RDSDF

Q_{area14} = C*i*A = 0.92*3.8*0.68

= 2.36 cfs

Subarea No. 15:

$Area_{15}$ = 3002.88 sf = 0.07 Ac.
C = 0.40 From Table 2, Rules of the Design of Storm Drainage Facilities (RDSDF)
Δ Length = 210.00 ft.
Δ Height = 24.00 ft.
% Slope = 11.43
T_C = 11.20 min. From Plate 1, (RDSDF)
I = 3.90 in/hr. Rainfall Intensity from Plate 2, RDSDF
Q_{area15} = C*i*A = 0.4*39*0.07
= 0.11 cfs

Subarea No. 16:

$Area_{16}$ = 1917.45 sf = 0.04 Ac.
C = 0.40 From Table 2, Rules of the Design of Storm Drainage Facilities (RDSDF)
Δ Length = 55.00 ft.
Δ Height = 7.24 ft.
% Slope = 13.16
T_C = 19.50 min. From Plate 1, (RDSDF)
I = 3.25 in/hr, Rainfall Intensity from Plate 2, RDSDF
Q_{area16} = C*i*A = 0.4*3.25*0.04
= 0.06 cfs

Subarea No. 17:

$Area_{17}$ = 4617.27 sf = 0.11 Ac.
A_{SOIL} = 2199.31 sf = 0.05 Ac.
A_{ROOF} = 2417.96 sf = 0.06 Ac.
C_{SOIL} = 0.40 From Table 2, Rules of the Design of Storm Drainage Facilities (RDSDF)
C_{ROOF} = 0.95 From Table 2, Rules of the Design of Storm Drainage Facilities (RDSDF)
$C_W = (A_{ROOF}*C_{ROOF}+A_{SOIL}*C_{SOIL})/AREA_2$ = 0.69
Δ Length = 57.00 ft.
Δ Height = 4.08 ft.
% Slope = 7.16
T_C = 19.00 min. From Plate 1, (RDSDF)
I =3.40 in/hr. Rainfall Intensity from Plate 2, RDSDF
$Qarea_{17}$ = C*i*A = 0.69*3.4*0.11
= 0.25 cfs

Subarea No. 18:

$Area_{18}$ = 466.33 sf = 0.01 Ac.
C = 0.40 From Table 2, Rules of the Design of Storm Drainage Facilities (RDSDF) Δ
Length = 35.00 ft.
Δ Height = 10.20 ft.
% Slope = 29.14
T_C = 21.00 min. From Plate 1, (RDSDF)
I = 3.20 in/hr. Rainfall Intensity from Plate 2, RDSDF

Q_{area18} = C*i*A = 0.4*3.2*0.01
= 0.01 cfs

Q_{Total} =11.53 cfs

FUTURE CONDITIONS: (Please refer to Figure 3-4)

Subarea No. 1:

$Area_1$ = 5237.55 sf = 0.12 Ac.
C = 0.90 From Table 2, Rules of the Design of Storm Drainage Facilities (RDSDF)
Δ Length = 180.00 ft.
Δ Height = 18.00 ft.
% Slope = 10.00
T_C = 16.80 min. From Plate 1, (RDSDF)
i = 3.61 in/hr. Rainfall Intensity from Plate 2, RDSDF
Q_{area1} = C*i*A = 0.9*3.61*0.12
= 0.39 cfs

Subarea No. 2:

$Area_2$ = 18273.83 sf = 0.42 Ac.
$A_{PAVEMENT}$ = 8086.17 sf = 0.19 Ac.
A_{ROOF} = 10187.66 sf = 0.23 Ac.
$C_{PAVEMENT}$ = 0.90 From Table 2, Rules of the Design of Storm Drainage Facilities (RDSDF)
C_{ROOF} = 0.95 From Table 2, Rules of the Design of Storm Drainage Facilities (RDSDF)
$C_W = (A_{ROOF}*C_{ROOF}+A_{PAVEMENT}*C_{PAVEMENT})/AREA_2$ = 0.93
Δ Length = 140.00 ft.
Δ Height = 6.50 ft.
% Slope = 4.64
T_C = 20.00 min. From Plate 1, (RDSDF)
I = 3.28 in/hr. Rainfall Intensity from Plate 2, RDSDF
Q_{area2} = C*i*A = 0.93*3.28*0.42
= 1.28 cfs

Subarea No. 3:

$Area_3$ = 4035.94 sf = 0.09 Ac.
C = 0.40 From Table 2, Rules of the Design of Storm Drainage Facilities (RDSDF)
Δ Length = 95.00 ft.
Δ Height = 10.89 ft.
% Slope = 11.46
T_C = 15.50 min. From Plate 1, (RDSDF)
I = 3.65 in/hr. Rainfall Intensity from Plate 2, RDSDF
Q_{area3} = C*i*A = 0.4*3.65*0.09

= 0.14 cfs

Subarea No. 4:

$Area_4$ = 5842.07 sf = 0.13 Ac.
C = 0.40 From Table 2, Rules of the Design of Storm Drainage Facilities (RDSDF)
Δ Length = 90.00 ft.
Δ Height = 16.14 ft.
% Slope = 17.93
T_C = 15.00 min. From Plate 1, (RDSDF)
I = 3.70 in/hr. Rainfall Intensity from Plate 2, RDSDF
Q_{area4} = C*i*A = 0.4*3.7*0.13
= 0.20 cfs

Subarea No. 5:

$Area_5$ = 5562.05 sf = 0.13 Ac.
C = 0.90 From Table 2, Rules of the Design of Storm Drainage Facilities (RDSDF)
Δ Length = 190.00 ft.
Δ Height = 6.50 ft.
% Slope = 3.42
T_C = 18.00 min. From Plate 1, (RDSDF)
I = 3.40 in/hr. Rainfall Intensity from Plate 2, RDSDF
Q_{area5} = C*i*A = 0.9*3.4*0.13
= 0.39 cfs

Subarea No. 6:

$Area_6$ = 2792 sf = 0.06 Ac.
C = 0.40 From Table 2, Rules of the Design of Storm Drainage Facilities (RDSDF)
Δ Length = 52.00 ft.
Δ Height = 10.18 ft.
% Slope = 19.58
T_C = 18.50 min. From Plate 1, (RDSDF)
I = 3.30 in/hr. Rainfall Intensity from Plate 2, RDSDF
Q_{area6} = C*i*A = 0.4*3.3*0.06
= 0.08 cfs

Subarea No. 7:

$Area_7$ = 12478.64 sf = 0.29 Ac.
C = 0.90 From Table 2, Rules of the Design of Storm Drainage Facilities (RDSDF)
Δ Length = 260.00 ft.
Δ Height = 15.00 ft.
% Slope = 5.77
T_C = 15.50 min. From Plate 1, (RDSDF)
I = 3.65 in/hr. Rainfall Intensity from Plate 2, RDSDF
Q_{area7} = C*i*A = 0.9*3.65*0.29
= 0.94 cfs

Subarea No. 8:

$Area_8$ = 6151.68 sf = 0.14 Ac.
C = 0.35 From Table 2, Rules of the Design of Storm Drainage Facilities (RDSDF)
Δ Length = 80.00 ft.
Δ Height = 8.24 ft.
% Slope = 10.30
T_C = 12.50 min. From Plate 1, (RDSDF)
I = 3.80 in/hr. Rainfall Intensity from Plate 2, RDSDF
Q_{area8} = C*i*A = 0.35*3.8*0.14
= 0.19 cfs

Subarea No. 9:

$Area_9$ = 3231.14 sf = 0.07 Ac.
C = 0.40 From Table 2, Rules of the Design of Storm Drainage Facilities (RDSDF)
Δ Length = 115.00 ft.
Δ Height = 18.33 ft.
% Slope = 15.94
T_C = 11.20 min. From Plate 1, (RDSDF)
i = 3.90 in/hr. Rainfall Intensity from Plate 2, RDSDF
Q_{area9} = C*i*A = 0.4*3.9*0.07
= 0.12 cfs

Subarea No. 10:

$Area_{10}$ = 13644.35 sf = 0.31 Ac.
A_{LAWN} = 5931.22 sf = 0.14 Ac.
A_{ROOF} = 7713.13 sf = 0.18 Ac.
C_{LAWN} = 0.30 From Table 2, Rules of the Design of Storm Drainage Facilities (RDSDF)
C_{ROOF} = 0.95 From Table 2, Rules of the Design of Storm Drainage Facilities (RDSDF)
$C_W = (A_{ROOF}*C_{ROOF}+A_{LAWN}*C_{LAWN})/AREA_{10}$= 0.67
Δ Length = 80.00 ft.
Δ Height = 10.36 ft.
% Slope = 12.95
T_C = 13.50 min. From Plate 1, (RDSDF)
I = 3.80 in/hr. Rainfall Intensity from Plate 2, RDSDF
Q_{area10} = C*i*A = 0.67*3.8*0.31
= 0.79 cfs

Subarea No. 11:

$Area_{11}$ = 47438.49 sf = 1.09 Ac.
A_{LAWN} = 26822.99 sf = 0.62 Ac.
A_{ROOF} = 20615.50 sf = 0.47 Ac.
C_{LAWN} = 0.30 From Table 2, Rules of the Design of Storm Drainage Facilities (RDSDF)
C_{ROOF} = 0.95 From Table 2, Rules of the Design of Storm Drainage Facilities (RDSDF)
$C_W = (A_{ROOF}*C_{ROOF}+A_{LAWN}*C_{LAWN})/AREA_{11}$= 0.58
Δ Length = 400.00 ft.
Δ Height = 19.96 ft.
% Slope = 4.99
T_C = 7.00 min. From Plate 1, (RDSDF)
I = 5.20 in/hr. Rainfall Intensity from Plate 2, RDSDF
Q_{area10} = C*i*A = 0.58*5.2*1.09
= 3.3 cfs

Subarea No. 12:

$Area_{12}$ = 17952.64 sf = 0.41 Ac.
C = 0.05 From Table 2, Rules of the Design of Storm Drainage Facilities (RDSDF)
Δ Length = 82.00 ft.
Δ Height = 12.60 ft.
% Slope = 15.37
T_C = 15.00 min. From Plate 1, (RDSDF)

I = 3.58 in/hr. Rainfall Intensity from Plate 2, RDSDF

Q_{area12} = C*i*A = 0.05*3.580*0.41

= 0.07 cfs

Subarea No. 13:

$Area_{13}$ = 12635 sf = 0.29 Ac.

$A_{TILE/PAV.}$ = 2863.54 sf = 0.07 Ac.

A_{ROOF} = 9771.46 sf = 0.22 Ac.

$C_{TILE/PAV.}$ = 0.70 From Table 2, Rules of the Design of Storm Drainage Facilities (RDSDF)

C_{ROOF} = 0.95 From Table 2, Rules of the Design of Storm Drainage Facilities (RDSDF)

$C_W = (A_{ROOF}*C_{ROOF}+A_{TILE/PAV.}*C_{TILE/PAV.})/AREA_{13}$ = 0.89

Δ Length = 60.00 ft.

Δ Height = 0.67 ft.

% Slope = 1.12

T_C = 33.00 min. From Plate 1, (RDSDF)

I = 2.60 in/hr. Rainfall Intensity from Plate 2, RDSDF

Q_{area13} = C*i*A = 0.86*2.6*0.29

= 0.67 cfs

Subarea No. 14:

$Area_{14}$ = 29454 sf = 0.68 Ac.

$A_{PAVEMENT}$ = 19080.36 sf = 0.44 Ac.

A_{ROOF} = 10373.64 sf = 0.24 Ac.

$C_{PAVEMENT}$ = 0.90 From Table 2, Rules of the Design of Storm Drainage Facilities (RDSDF)

C_{ROOF} = 0.95 From Table 2, Rules of the Design of Storm Drainage Facilities (RDSDF)

$C_W = (A_{ROOF}*C_{ROOF}+A_{PAVEMENT}*C_{PAVEMENT})/AREA_{14}$ = 0.92

Δ Length = 320.00 ft.

Δ Height = 26.65 ft.

% Slope = 8.33

T_C = 13.10 min. From Plate 1, (RDSDF)

I = 3.80 in/hr. Rainfall Intensity from Plate 2, RDSDF

Q_{area14} = C*i*A = 0.92*3.8*0.68

= 2.36 cfs

Subarea No. 15:

$Area_{15}$ = 3002.88 sf = 0.07 Ac.
C = 0.40 From Table 2, Rules of the Design of Storm Drainage Facilities (RDSDF)
Δ Length = 210.00 ft.
Δ Height = 24.00 ft.
% Slope = 11.43
T_C = 11.20 min. From Plate 1, (RDSDF)
I = 3.90 in/hr. Rainfall Intensity from Plate 2, RDSDF
Q_{area15} = C*i*A = 0.4*39*0.07
= 0.11 cfs

Subarea No. 16:

$Area_{16}$ = 1917.45 sf = 0.04 Ac.
C = 0.40 From Table 2, Rules of the Design of Storm Drainage Facilities (RDSDF)
Δ Length = 55.00 ft.
Δ Height = 7.24 ft.
% Slope = 13.16
T_C = 19.50 min. From Plate 1, (RDSDF)
I = 3.25 in/hr, Rainfall Intensity from Plate 2, RDSDF
Q_{area16} = C*i*A = 0.4*3.25*0.04
= 0.06 cfs

Subarea No. 17:

$Area_{17}$ = 4617.27 sf = 0.11 Ac.
A_{SOIL} = 2199.31 sf = 0.05 Ac.
A_{ROOF} = 2417.96 sf = 0.06 Ac.
C_{SOIL} = 0.40 From Table 2, Rules of the Design of Storm Drainage Facilities (RDSDF)
C_{ROOF} = 0.95 From Table 2, Rules of the Design of Storm Drainage Facilities (RDSDF)
$C_W = (A_{ROOF}*C_{ROOF}+A_{SOIL}*C_{SOIL})/AREA_2$ = 0.69
Δ Length = 57.00 ft.
Δ Height = 4.08 ft.
% Slope = 7.16
T_C = 19.00 min. From Plate 1, (RDSDF)
I =3.40 in/hr. Rainfall Intensity from Plate 2, RDSDF
$Qarea_{17}$ = C*i*A = 0.69*3.4*0.11
= 0.25 cfs

Subarea No. 18:

$Area_{18}$ = 466.33 sf = 0.01 Ac.
C = 0.40 From Table 2, Rules of the Design of Storm Drainage Facilities (RDSDF)
Δ Length = 35.00 ft.
Δ Height = 10.20 ft.
% Slope = 29.14
T_C = 21.00 min. From Plate 1, (RDSDF)
I = 3.20 in/hr. Rainfall Intensity from Plate 2, RDSDF

Q_{area18} = C*i*A = 0.4*3.2*0.01
= 0.01 cfs

Q_{Total} =11.35 cfs

Δ Q = 0.18 cfs Amount of runoff reduction under Future conditions, or (0.18/11.53)* 100=1.56%

APPENDIX B

Hydraulic Calculations for Drain Pipes and Channels

Marc M. Siah & Associates, Inc.

Consulting Civil • Structural • Environmental & Ocean Engineers
820 South Beretania Street, Suite 201, Honolulu, Hawaii 96813

36-INCH STORM DRAIN LINE # 1
Worksheet for Circular Channel

Project Description	
Project File	c:\haestad\academic\fmw\project1.fm2
Worksheet	KAHANA SUNSET STORM DRAIN SYSTEM
Flow Element	Circular Channel
Method	Manning's Formula
Solve For	Channel Depth

Input Data		
Mannings Coefficient	0.013	
Channel Slope	0.039000	ft/ft
Diameter	36.00	in
Discharge	45.42	cfs

Results		
Depth	1.22	ft
Flow Area	2.69	ft²
Wetted Perimeter	4.14	ft
Top Width	2.95	ft
Critical Depth	2.20	ft
Percent Full	40.51	
Critical Slope	0.005911	ft/ft
Velocity	16.92	ft/s
Velocity Head	4.45	ft
Specific Energy	5.66	ft
Froude Number	3.12	
Maximum Discharge	141.68	cfs
Full Flow Capacity	131.71	cfs
Full Flow Slope	0.004638	ft/ft
Flow is supercritical.		

36-INCH STORM DRAIN LINE # 2
Worksheet for Circular Channel

Project Description	
Project File	c:\haestad\academic\fmw\project1.fm2
Worksheet	KAHANA SUNSET STORM DRAIN SYSTEM
Flow Element	Circular Channel
Method	Manning's Formula
Solve For	Channel Depth

Input Data		
Mannings Coefficient	0.013	
Channel Slope	0.043000	ft/ft
Diameter	36.00	in
Discharge	45.42	cfs

Results		
Depth	1.18	ft
Flow Area	2.59	ft²
Wetted Perimeter	4.07	ft
Top Width	2.93	ft
Critical Depth	2.20	ft
Percent Full	39.44	
Critical Slope	0.005911	ft/ft
Velocity	17.53	ft/s
Velocity Head	4.78	ft
Specific Energy	5.96	ft
Froude Number	3.29	
Maximum Discharge	148.77	cfs
Full Flow Capacity	138.30	cfs
Full Flow Slope	0.004638	ft/ft
Flow is supercritical.		

30-INCH STORM DRAIN LINE # 3
Worksheet for Circular Channel

Project Description	
Project File	c:\haestad\academic\fmw\project1.fm2
Worksheet	KAHANA SUNSET STORM DRAIN SYSTEM
Flow Element	Circular Channel
Method	Manning's Formula
Solve For	Channel Depth

Input Data		
Mannings Coefficient	0.013	
Channel Slope	0.389000	ft/ft
Diameter	30.00	in
Discharge	9.12	cfs

Results		
Depth	0.32	ft
Flow Area	0.37	ft²
Wetted Perimeter	1.84	ft
Top Width	1.68	ft
Critical Depth	1.01	ft
Percent Full	12.92	
Critical Slope	0.004244	ft/ft
Velocity	24.55	ft/s
Velocity Head	9.37	ft
Specific Energy	9.69	ft
Froude Number	9.20	
Maximum Discharge	275.18	cfs
Full Flow Capacity	255.81	cfs
Full Flow Slope	0.000494	ft/ft
Flow is supercritical.		

24-INCH STORM DRAIN LINE # 4
Worksheet for Circular Channel

Project Description	
Project File	c:\haestad\academic\fmw\project1.fm2
Worksheet	KAHANA SUNSET STORM DRAIN SYSTEM
Flow Element	Circular Channel
Method	Manning's Formula
Solve For	Channel Depth

Input Data		
Mannings Coefficient	0.013	
Channel Slope	0.083000	ft/ft
Diameter	24.00	in
Discharge	55.13	cfs

Results		
Depth	1.41	ft
Flow Area	2.37	ft²
Wetted Perimeter	3.99	ft
Top Width	1.82	ft
Critical Depth	1.99	ft
Percent Full	70.56	
Critical Slope	0.055461	ft/ft
Velocity	23.27	ft/s
Velocity Head	8.41	ft
Specific Energy	9.82	ft
Froude Number	3.60	
Maximum Discharge	70.10	cfs
Full Flow Capacity	65.17	cfs
Full Flow Slope	0.059394	ft/ft
Flow is supercritical.		

36-INCH SDL #5, STA 0+00 TO STA. 0+188.1
Worksheet for Circular Channel

Project Description	
Project File	c:\haestad\academic\fmw\project1.fm2
Worksheet	KAHANA SUNSET STORM DRAIN SYSTEM
Flow Element	Circular Channel
Method	Manning's Formula
Solve For	Channel Depth

Input Data		
Mannings Coefficient	0.013	
Channel Slope	0.008000	ft/ft
Diameter	36.00	in
Discharge	55.13	cfs

Results		
Depth	2.28	ft
Flow Area	5.75	ft^2
Wetted Perimeter	6.34	ft
Top Width	2.57	ft
Critical Depth	2.41	ft
Percent Full	75.88	
Critical Slope	0.007096	ft/ft
Velocity	9.58	ft/s
Velocity Head	1.43	ft
Specific Energy	3.70	ft
Froude Number	1.13	
Maximum Discharge	64.17	cfs
Full Flow Capacity	59.65	cfs
Full Flow Slope	0.006833	ft/ft
Flow is supercritical.		

36-INCH SDL #5, STA 1+88.1 TO OUTLET
Worksheet for Circular Channel

Project Description	
Project File	c:\haestad\academic\fmw\project1.fm2
Worksheet	KAHANA SUNSET STORM DRAIN SYSTEM
Flow Element	Circular Channel
Method	Manning's Formula
Solve For	Channel Depth

Input Data		
Mannings Coefficient	0.013	
Channel Slope	0.008000	ft/ft
Diameter	36.00	in
Discharge	59.08	cfs

Results		
Depth	2.43	ft
Flow Area	6.14	ft^2
Wetted Perimeter	6.73	ft
Top Width	2.35	ft
Critical Depth	2.49	ft
Percent Full	81.10	
Critical Slope	0.007702	ft/ft
Velocity	9.62	ft/s
Velocity Head	1.44	ft
Specific Energy	3.87	ft
Froude Number	1.05	
Maximum Discharge	64.17	cfs
Full Flow Capacity	59.65	cfs
Full Flow Slope	0.007847	ft/ft
Flow is supercritical.		

6-INCH STORM DRAIN LINE # 6
Worksheet for Circular Channel

Project Description	
Project File	c:\haestad\academic\fmw\project1.fm2
Worksheet	KAHANA SUNSET STORM DRAIN SYSTEM
Flow Element	Circular Channel
Method	Manning's Formula
Solve For	Full Flow Diameter

Input Data		
Mannings Coefficient	0.013	
Channel Slope	0.213000	ft/ft
Discharge	3.95	cfs

Results		
Depth	7.0	in
Diameter	7.03	in
Flow Area	0.27	ft²
Wetted Perimeter	1.84	ft
Top Width	0.00	ft
Critical Depth	0.59	ft
Percent Full	100.00	
Critical Slope	0.206816	ft/ft
Velocity	14.66	ft/s
Velocity Head	3.34	ft
Specific Energy	FULL	ft
Froude Number	FULL	
Maximum Discharge	4.25	cfs
Full Flow Capacity	3.95	cfs
Full Flow Slope	0.213000	ft/ft

Notes:

SHOWS THAT 6-INCH LINE IS NOT ADEQUATE!
LARGER SIZE PIPE IS REQUIRED.

8-INCH STORM DRAIN LINE # 6
Worksheet for Circular Channel

Project Description	
Project File	c:\haestad\academic\fmw\project1.fm2
Worksheet	KAHANA SUNSET STORM DRAIN SYSTEM
Flow Element	Circular Channel
Method	Manning's Formula
Solve For	Channel Depth

Input Data		
Mannings Coefficient	0.013	
Channel Slope	0.213000	ft/ft
Diameter	8.00	in
Discharge	3.95	cfs

Results		
Depth	5.0	in
Flow Area	0.23	ft²
Wetted Perimeter	1.21	ft
Top Width	0.65	ft
Critical Depth	0.66	ft
Percent Full	62.14	
Critical Slope	0.101093	ft/ft
Velocity	17.33	ft/s
Velocity Head	4.67	ft
Specific Energy	5.08	ft
Froude Number	5.15	
Maximum Discharge	6.00	cfs
Full Flow Capacity	5.58	cfs
Full Flow Slope	0.106859	ft/ft
Flow is supercritical.		

12-INCH STORM DRAIN LINE # 7
Worksheet for Circular Channel

Project Description	
Project File	c:\haestad\academic\fmw\project1.fm2
Worksheet	KAHANA SUNSET STORM DRAIN SYSTEM
Flow Element	Circular Channel
Method	Manning's Formula
Solve For	Channel Depth

Input Data		
Mannings Coefficient	0.013	
Channel Slope	0.063000	ft/ft
Diameter	12.00	in
Discharge	1.02	cfs

Results		
Depth	2.7	in
Flow Area	0.13	ft²
Wetted Perimeter	1.00	ft
Top Width	0.84	ft
Critical Depth	0.42	ft
Percent Full	22.81	
Critical Slope	0.005824	ft/ft
Velocity	7.57	ft/s
Velocity Head	0.89	ft
Specific Energy	1.12	ft
Froude Number	3.33	
Maximum Discharge	9.62	cfs
Full Flow Capacity	8.94	cfs
Full Flow Slope	0.000820	ft/ft
Flow is supercritical.		

6-INCH STORM DRAIN LINE # 8
Worksheet for Circular Channel

Project Description	
Project File	c:\haestad\academic\fmw\project1.fm2
Worksheet	KAHANA SUNSET STORM DRAIN SYSTEM
Flow Element	Circular Channel
Method	Manning's Formula
Solve For	Channel Depth

Input Data		
Mannings Coefficient	0.013	
Channel Slope	0.382000	ft/ft
Diameter	6.00	in
Discharge	0.59	cfs

Results		
Depth	1.7	in
Flow Area	0.04	ft²
Wetted Perimeter	0.56	ft
Top Width	0.45	ft
Critical Depth	0.39	ft
Percent Full	27.91	
Critical Slope	0.012126	ft/ft
Velocity	13.17	ft/s
Velocity Head	2.70	ft
Specific Energy	2.83	ft
Froude Number	7.35	
Maximum Discharge	3.73	cfs
Full Flow Capacity	3.47	cfs
Full Flow Slope	0.011058	ft/ft
Flow is supercritical.		

Channel N0. 1 - Sta. 0+00 to Sta. 0+31.7
Worksheet for Rectangular Channel

Project Description	
Project File	k:\1281\reports\drainage report\kahana s.fm2
Worksheet	Kahana Sunset Cobbled Open Channels
Flow Element	Rectangular Channel
Method	Manning's Formula
Solve For	Channel Depth

Input Data		
Mannings Coefficient	0.035	
Channel Slope	0.346000	ft/ft
Bottom Width	2.00	ft
Discharge	1.02	cfs

Results		
Depth	0.10	ft
Flow Area	0.20	ft^2
Wetted Perimeter	2.20	ft
Top Width	2.00	ft
Critical Depth	0.20	ft
Critical Slope	0.038909	ft/ft
Velocity	5.07	ft/s
Velocity Head	0.40	ft
Specific Energy	0.50	ft
Froude Number	2.82	
Flow is supercritical.		

Channel N0. 1 - Sta. 0+31.7 to Sta. 0+76
Worksheet for Rectangular Channel

Project Description	
Project File	k:\1281\reports\drainage report\kahana s.fm2
Worksheet	Kahana Sunset Cobbled Open Channels
Flow Element	Rectangular Channel
Method	Manning's Formula
Solve For	Channel Depth

Input Data		
Mannings Coefficient	0.035	
Channel Slope	0.190000	ft/ft
Bottom Width	2.00	ft
Discharge	1.02	cfs

Results		
Depth	0.12	ft
Flow Area	0.24	ft^2
Wetted Perimeter	2.24	ft
Top Width	2.00	ft
Critical Depth	0.20	ft
Critical Slope	0.038909	ft/ft
Velocity	4.20	ft/s
Velocity Head	0.27	ft
Specific Energy	0.40	ft
Froude Number	2.13	
Flow is supercritical.		

Channel No. 2 - Sta. 0+00 to Sta. 0+47.8
Worksheet for Rectangular Channel

Project Description	
Project File	k:\1281\reports\drainage report\kahana s.fm2
Worksheet	Kahan Sunset Strom Channels
Flow Element	Rectangular Channel
Method	Manning's Formula
Solve For	Channel Depth

Input Data		
Mannings Coefficient	0.035	
Channel Slope	0.123000	ft/ft
Bottom Width	2.00	ft
Discharge	0.12	cfs

Results		
Depth	0.04	ft
Flow Area	0.07	ft^2
Wetted Perimeter	2.07	ft
Top Width	2.00	ft
Critical Depth	0.05	ft
Critical Slope	0.052231	ft/ft
Velocity	1.62	ft/s
Velocity Head	0.04	ft
Specific Energy	0.08	ft
Froude Number	1.48	
Flow is supercritical.		

CHANNEL # 2, STA. 0+47.8 TO STA. 0+78.3
Worksheet for Rectangular Channel

Project Description	
Project File	c:\haestad\academic\fmw\project1.fm2
Worksheet	KAHANA SUNSET COBBLED OPEN CHANNELS
Flow Element	Rectangular Channel
Method	Manning's Formula
Solve For	Channel Depth

Input Data		
Mannings Coefficient	0.035	
Channel Slope	0.118000	ft/ft
Bottom Width	2.00	ft
Discharge	3.59	cfs

Results		
Depth	0.32	ft
Flow Area	0.64	ft²
Wetted Perimeter	2.64	ft
Top Width	2.00	ft
Critical Depth	0.46	ft
Critical Slope	0.038332	ft/ft
Velocity	5.65	ft/s
Velocity Head	0.50	ft
Specific Energy	0.81	ft
Froude Number	1.77	
Flow is supercritical.		

Determination of Drain Lines Flows:

$Q_{subarea\ 1} = 0.39$
$Q_{subarea\ 2} = 1.28$
$Q_{subarea\ 3} = 0.14$
$Q_{subarea\ 4} = 0.20$
$Q_{subarea\ 5} = 0.39$
$Q_{subarea\ 6} = 0.08$
$Q_{subarea\ 7} = 0.94$
$Q_{subarea\ 8} = 0.19$
$Q_{subarea\ 9} = 0.12$
$Q_{subarea\ 10} = 0.79$
$Q_{subarea\ 11} = 3.39$
$Q_{subarea\ 12} = 0.05$
$Q_{subarea\ 13} = 0.78$
$Q_{subarea\ 14} = 2.36$
$Q_{subarea\ 15} = 0.11$
$Q_{subarea\ 16} = 0.06$
$Q_{subarea\ 17} = 0.25$
$Q_{subarea\ 18} = 0.01$
$Q_{Napili\ Villas} = 44.00$
$Q_{Road\ ROW} = 9.12$
$Q_{on\text{-}site} = 11.53$
$Q_{off\text{-}site} = 53.12$
$Q_{total} = 64.65$
$Q_{line\ 1} = Q_{Napili\ Villas} + Q_{subarea\ 2} + Q_{subarea\ 3} = 45.42$ cfs
$Q_{line\ 2} = Q_{line\ 1} = 45.42$ cfs
$Q_{Line\ 3} = 9.12$ cfs (from Lower Honoapiilani ROW)
$Q_{Line\ 4} = Q_{Line\ 2} + Q_{Line\ 3} + Q_{Line\ 8} = 55.13$ cfs
$Q_{Line\ 5\ up\ to\ Sta.\ 1+88} = Q_{Line\ 4} = 55.13$ cfs
$Q_{Line\ 5\ from\ Sta.\ 1+88\ to\ Sta.\ 3+05.1} = Q_{Line\ 5\ up\ to\ Sta.\ 1+88} + Q_{Line\ 6} = 59.08$
$Q_{Line\ 6} = Q_{subarea\ 1} + Q_{subarea\ 13} + Q_{subarea\ 14} + Q_{subarea\ 15} + Q_{subarea\ 16} + Q_{subarea\ 17}$
$= 3.95$ cfs
$Q_{Line\ 7} = Q_{subarea\ 6} + Q_{subarea\ 7} = 1.02$ cfs
$Q_{Line\ 8} = Q_{subarea\ 5} + Q_{subarea\ 4} = 0.59$ cfs
$Q_{Channel\ 1} = Q_{subarea\ 6} + Q_{subarea\ 7} = 1.02$ cfs
$Q_{Channel\ 2\ to\ Sta.\ 0+47} = Q_{subarea\ 9} = 0.12$ cfs
$Q_{Channel\ 2\ from\ Sta.\ 0+47\ to\ Outlet} = Q_{subarea\ 8} + Q_{subarea\ 11} + Q_{subarea\ 18} = 3.59$ cfs

`

820 S. Beretania Street • Suite 201 • Honolulu, HI • Phone: (808) 538-7180 • Fax: (808) 528-4352 • Email: msiah@mmsengineering.com

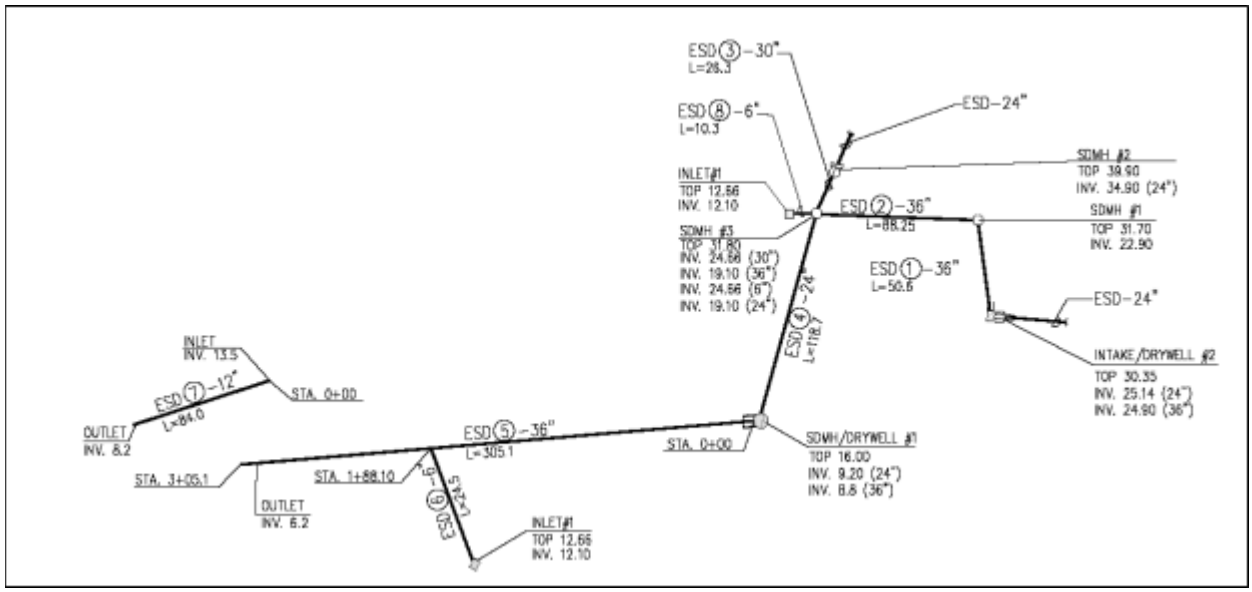

Fig. 1 Existing Storm Drain System at Kahana Sunset

Calculations for Manhole Losses:

Use Rules Relating to Storm Drainage Standards,
Dept. of Planning & Permitting, City and County of Honolulu (attached)

Losses at Intake/Dry Well #1:

Entrance and Exit Loss - "A"

A_{24}, incoming = 3.14
A_{36}, outgoing = 7.065
Incoming Flow = 44 cfs, V_1 = 14.01 fps
Outgoing Flow = 45.42 cfs V_2 = 6.43 fps
Use higher velocity,V_1, and from Plate 17, Curve "C", "h_A" = 0.65
h_A = 0.65

Velocity Head Loss - "B"

Use curve "B" from Plate 17, to determine h_v
Since V_2 is smaller than V_1, then h_B = 0.0
h_B = 0.00

Directional Change Loss - "C"

Use higher velocity,V_2 , and from Plate 17, Curve "C", "h" = 0.65
for 90 change in flow direction, $h_C = 2h = h_{C = 1.3}$

Loss Due to Incoming Volume - "D"

$Qbranch/Q_1$ = 0.03 From Plate 18, for V_1 = 14 fps, h_D = 0.05

TOTAL LOSS = A+B+C+D= 2.00 ft

SDMH # 1:

Entrance and Exit Loss - "A"

V_1= Incoming Flow/Area = 6.42887473 fps
V_2 = Outgoing Flow/Area = 6.42887473 fps
Use higher velocity,V_2 , and from Plate 17, Curve "C", "h_A" = 0.12
h_A = 0.12

Velocity Head Loss - "B"

`

Use curve "B" from Plate 17, to determine h_v
Since V_2 is equal to V1, then $h_B = h_{B2} - h_{B1}$=0
h_{B1} = 0.65
h_{B2} = 0.65
h_B = 0

Directional Change Loss - "C"

Use higher velocity,V_2 , and from Plate 17, Curve "C", "h" = 0.12
for 90 change in flow direction, h_C=2h=
h_C = 0.24

Loss Due to Incoming Volume - "D"

h_D = 0 there is no branch flow

TOTAL LOSS = A+B+C+D= 0.36 ft

SDMH # 2:

Entrance and Exit Loss - "A"

V_1 = Incoming Flow = 2.90 fps
V_2 = Outgoing Flow = 1.86 fps
Use higher velocity,V_2 , and from Plate 17, Curve "C", "h_A" = 0.05
h_A = 0.05

Velocity Head Loss - "B"

Use curve "B" from Plate 17, to determine hv
Since V_2 is larger than $_{V1}$, then h_B = 0
h_B = 0

Directional Change Loss - "C"

Use higher velocity,V_2 , and from Plate 17, Curve "C", "h" = 0.05
for 90 change in flow direction, h_C=2h=h_C =0.1

Loss Due to Incoming Volume - "D"

h_D = 0 there is no branch flow

TOTAL LOSS = A+B+C+D= 0.15 ft

SDMH # 3:

Entrance and Exit Loss - "A"

V_1 = Incoming Flow = 6.43 fps
V_2 = Incoming Flow = 1.86 fps
V_3 = Incoming Flow = 3.01 fps
V_4 = Outgoing Flow = 17.56 fps
Use higher velocity,V_4 , and from Plate 17, Curve "C", "h_A" = 1.7
h_A = 1.7

Velocity Head Loss - "B"

Use curve "B" from Plate 17, to determine h_v

Since V_4 is greater than V_1, then $h_B = h_{B4} - h_{B1}$
h_{B1} = 0.64
h_{B4} = 3.4 Max from "B" Plate 17
h_B = 2.76

Directional Change Loss - "C"

Use higher velocity,V_4 , and from Plate 17, Curve "C", "h" = 1.6
for more than 90 change in flow direction, h_C=0.67h
h_C = 1.072

Loss Due to Incoming Volume - "D"

Total Branch Volume = 9.71 cfs
Ratio of Branch to Upstream = 0.21378247
From Plate 18, using this flow ratio and higher velocity, h_D =0.7
h_D = 0.7

TOTAL LOSS = 6.232 ft

SDMH/DRYWELL # 1:

Entrance and Exit Loss - "A"

V_1 = Incoming Flow = 17.56 fps
V_2 = Outgoing Flow = 7.80 fps
Use higher velocity,V_2 , and from Plate 17, Curve "C", "h_A" = 1.15
h_A = 1.15

Velocity Head Loss - "B"

Use curve "B" from Plate 17, to determine h_v
Since V2 is less than to V1, then hB shall be zero
hB1 = 0.12
hB = 0

Directional Change Loss - "C"

Use higher velocity,V2 , and from Plate 17, Curve "C", "h" = 1.15
for 90 change in flow direction, h_C=2h=
h_C = 2.3

Loss Due to Incoming Volume - "D"
h_D = 0 there is no branch flow

TOTAL LOSS = A+B+C+D= 3.45 ft

HGL Calculations:

Controlling Grade at Ocean Outlet is 6.2 ft
Water depth 2.43
HGL at Outlet 8.63
Head Loss in 36 inch line, SDL # 5, HL = Slope*L = 2.4408
the Downstream HGL at SDMH/Drywell # 1 == 10.92 O.K.
the Upstream HGL at SDMH/Drywell # 1 = 14.37 O.K.
Head Loss in 24 inch line, SDL # 4, HL = Slope*L = 9.8521
the Downstream HGL at SDMH # 3 = 20.46 O.K.
the Upstream HGL at SDMH # 3 = 26.68 O.K.
Head Loss in 36 inch line, SDL # 2, HL = Slope*L = 3.8
the Downstream HGL at SDMH # 1 = 24.19 O.K.
the Upstream HGL at SDMH # 1 = 24.55 O.K.
Head Loss in 36 inch line, SDL # 1, HL = Slope*L = 1.9734
the Downstream HGL at Intake # 1 =26.08 O.K.
the Upstream HGL at Intake# 1 = 28.08 O.K.
Head Loss in 30-inch line, SDL # 3, HL = Slope*L = 10.2307
the Downstream HGL at SDMH # 2 = 35.24 O.K.
the Upstream HGL at SDMH # 2 = 35.39 O.K.
Head Loss in 6-inch line, SDL # 6 = HL = Slope*L = 5.2185
HGL at Drain Intel # 1 = 13.00 > 12.1 Floods the area
Head Loss in 6-inch line, SDL # 8, HL = Slope*L = 4.0067
HGL at Drain Intel # 2 = 28.75 O.K.

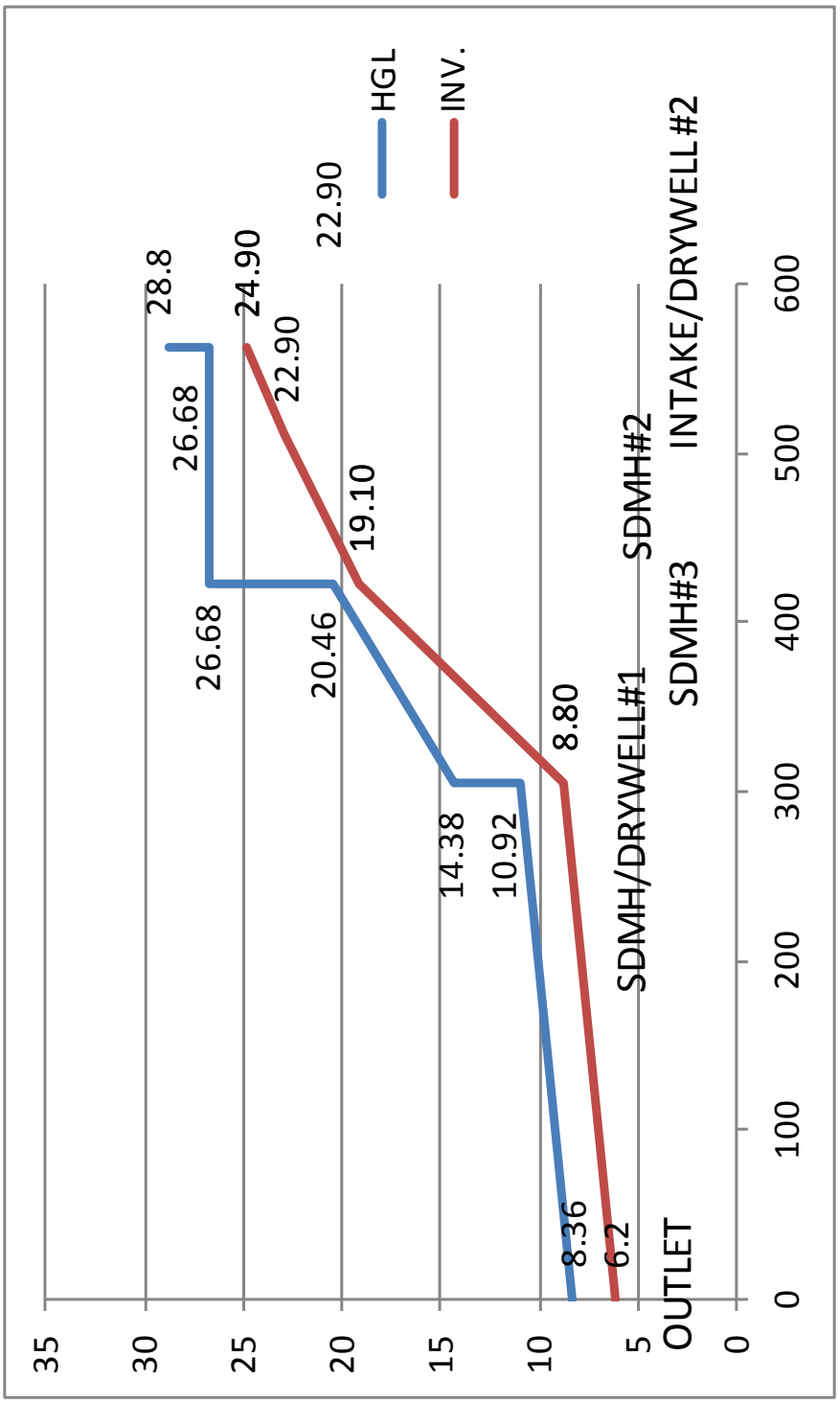

HGL BETWEEN OUTLET AND INTAKE/DRYWELL #2

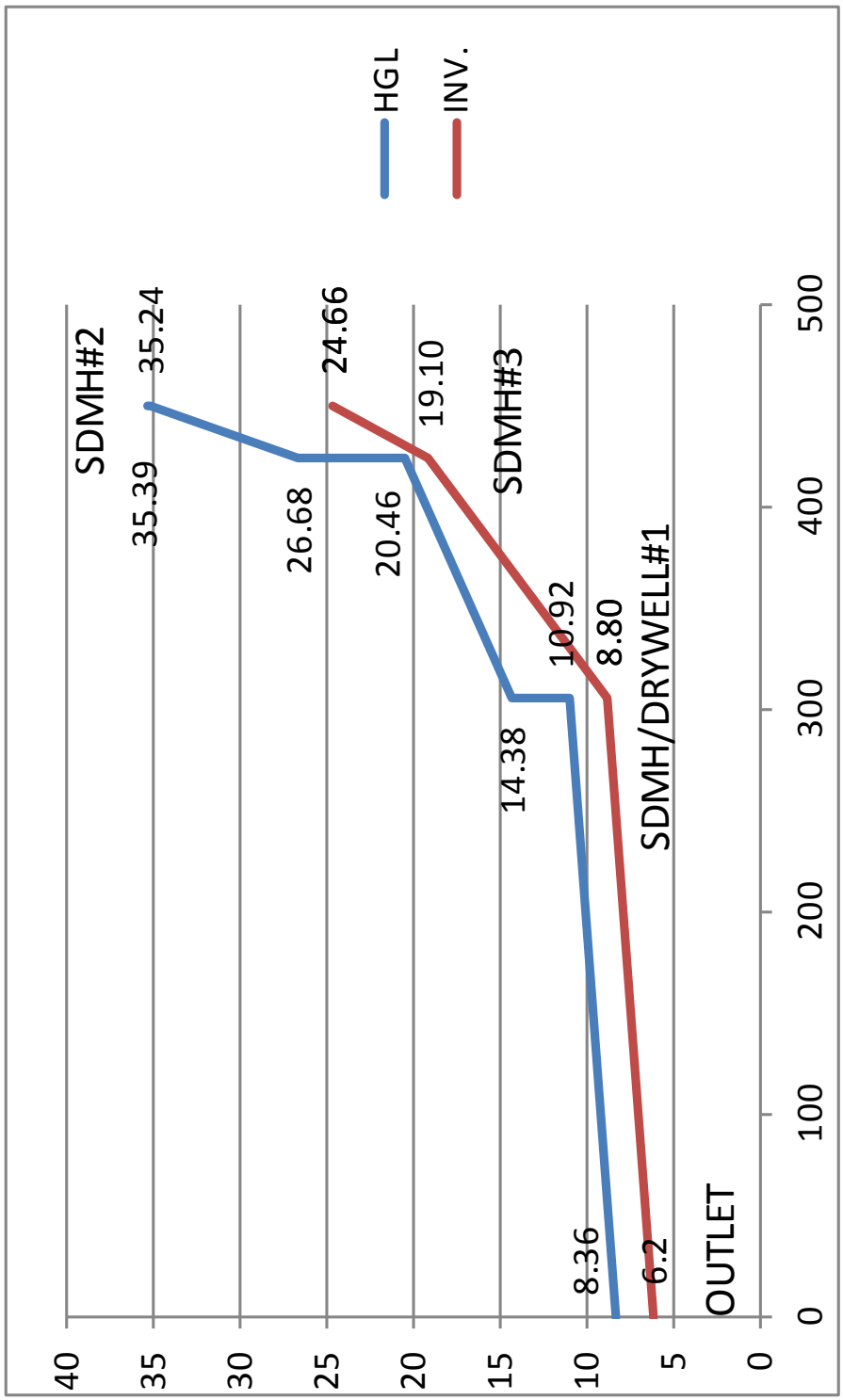

HGL BETWEEN OUTLET AND STORM DRAIN MANHOLE #2

HGL BETWEEN OUTLET AND INLET #2

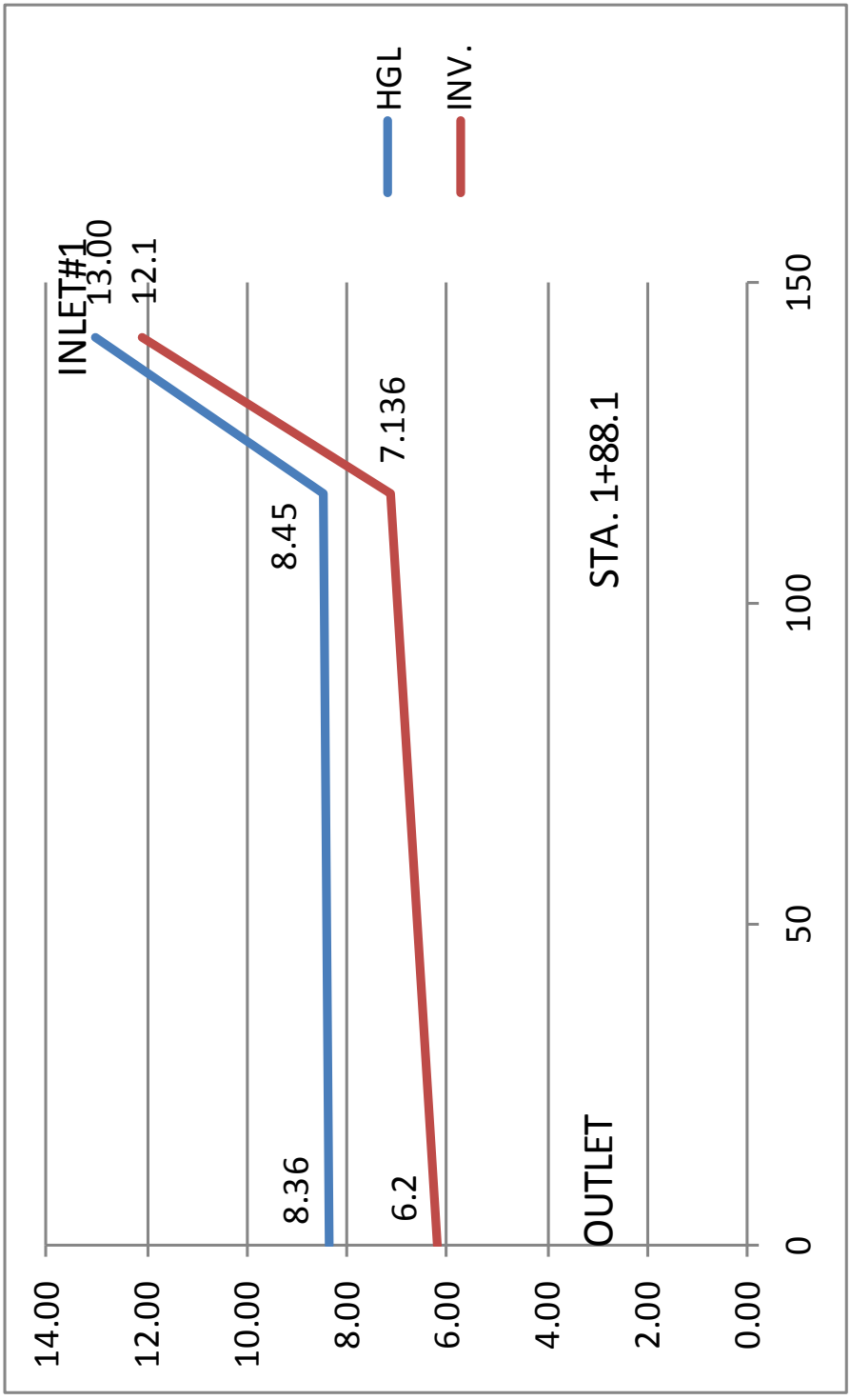

HGL BETWEEN OUTLET AND INLET # 1

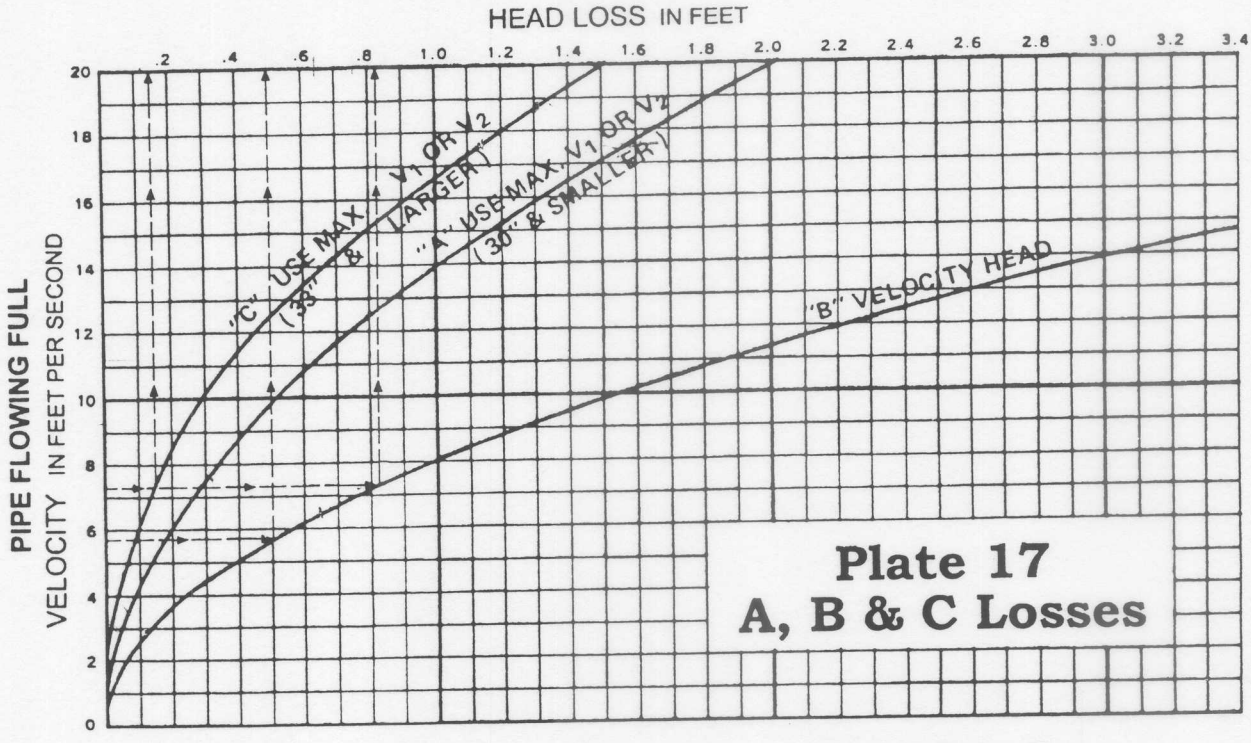

Head Losses in Manholes

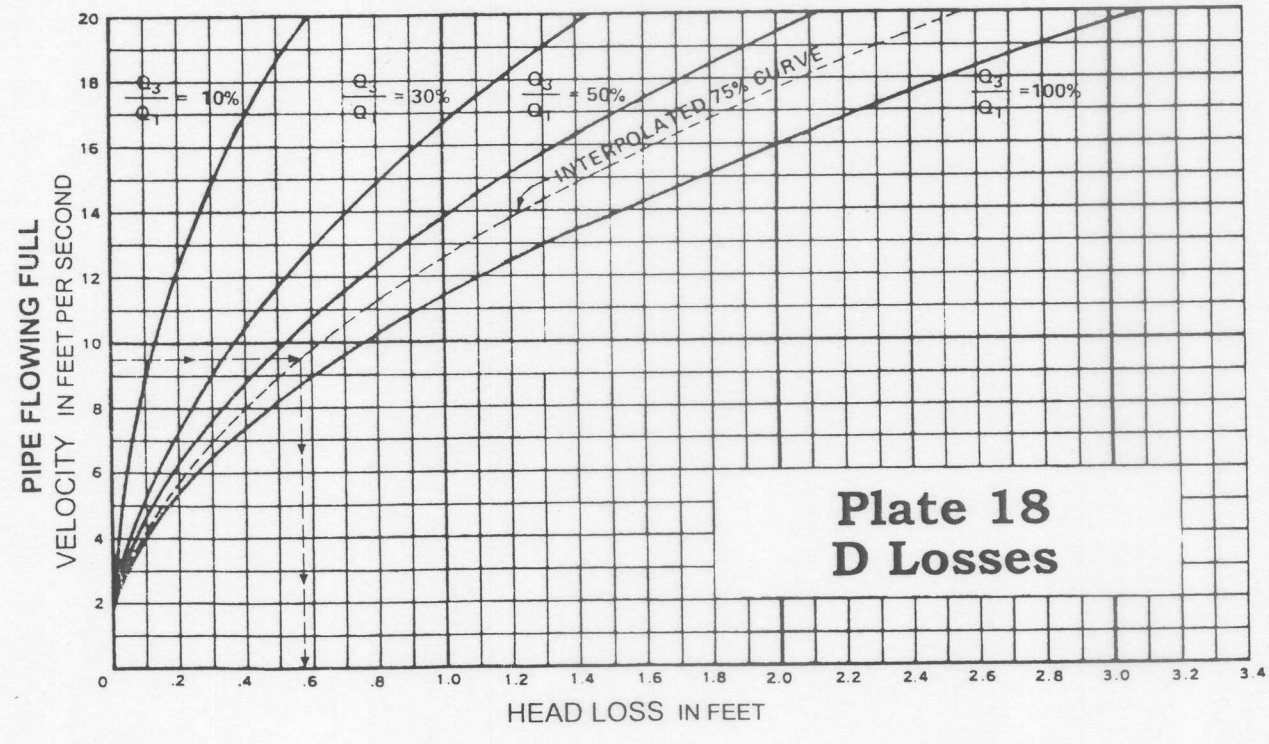

SOURCE: BALTIMORE COUNTY DEPARTMENT OF PUBLIC WORKS

Marc M. Siah & Associates, Inc.

Consulting Civil • Structural • Environmental & Ocean Engineers
820 South Beretania Street, Suite 201, Honolulu, Hawaii 96813