FILE COPY
NOV 23 2015

DEPARTMENT OF WATER SUPPLY • COUNTY OF HAWAI'I
345 KEKUANAO'A STREET, SUITE 20 • HILO, HAWAI'I 96720
TELEPHONE (808) 961-8050 • FAX (808) 961-8657

November 9, 2015

RECEIVED
'15 NOV 10 A9:39
OFC OF ENVIRONMENTAL QUALITY CONTROL

Mr. Scott Glenn, Interim Director
State of Hawai'i
Department of Health
Office of Environmental Quality Control
235 South Beretania Street, Room 702
Honolulu, HI 96813

Dear Mr. Glenn:

Subject: Agency Notice of Determination for the Draft Environmental Assessment for the Lālāmilo Well A Improvements at Tax Map Key (3) 6-6-001:068

With this letter, the County of Hawai'i, Department of Water Supply, hereby transmits the draft environmental assessment and anticipated finding of no significant impact (DEA-AFONSI) for the Lālāmilo Well A Improvements situated at Tax Map Key (3) 6-6-001:068, in the South Kohala District on Hawai'i Island for publication in the next available edition of the Environmental Notice.

Enclosed is a completed OEQC Publication Form, two copies of the DEA-AFONSI, an Adobe Acrobat PDF file of the same, and an electronic copy of the publication form in MS Word. Simultaneous with this letter, we have submitted the summary of the action in a text file by electronic mail to your office.

If there are any questions, please contact Mr. Larry Beck at (808) 961-8070, extension 260.

Sincerely yours,

Mr. Keith K. Okamoto, P.E.
Manager-Chief Engineer

LB:dfg

Enclosures: (1) Completed OEQC Publication form
(2) Two copies of the DEA-AFONSI
(3) DEA-AFONSI in electronic format
(4) Summary description of action in electronic format

July 2015 Revision

AGENCY ACTION
SECTION 343-5(b), HRS
PUBLICATION FORM

FILE COPY
NOV 23 2015

RECEIVED
'15 NOV 10 A9:39
OFC. OF ENVIRONMENTAL QUALITY CONTROL

Project Name	Lālāmilo Well A Improvements
HRS §343-5 Trigger(s):	Use of County lands or funds
Island:	Hawai'i Island, Lālāmilo Ahupua'a
District:	South Kohala District
TMK:	(3) 6-6-001:068
Permits:	NPDES Permit; Grading/Building Permits
Proposing/Determination Agency: (*Address, Contact Person, Telephone*)	Hawai'i Department of Water Supply County of Hawai'i 345 Kekūanaō'a Street, Suite 20 Hilo, Hawai'i 96720 Attn: Mr. Keith Okamoto, P.E., Manager - Chief Engineer Telephone: (808) 961-8060
Consultant: (*Address, Contact Person, Telephone*)	PBR HAWAII 1001 Bishop Street, Suite 650 Honolulu, HI 96813 Attn: Keli'i Kapali, Planner Phone: (808) 521-5631

Status (check one only):

X DEA-AFNSI	Submit the proposing agency notice of determination/transmittal on agency letterhead, a hard copy of DEA, a completed OEQC publication form, along with an electronic word processing summary and a PDF copy (you may send both summary and PDF to oeqchawaii@doh.hawaii.gov); a 30-day comment period ensues upon publication in the periodic bulletin.
__FEA-FONSI	Submit the proposing agency notice of determination/transmittal on agency letterhead, a hard copy of the FEA, an OEQC publication form, along with an electronic word processing summary and a PDF copy (send both summary and PDF to oeqchawaii@doh.hawaii.gov); no comment period ensues upon publication in the periodic bulletin.
__FEA-EISPN	Submit the proposing agency notice of determination/transmittal on agency letterhead, a hard copy of the FEA, an OEQC publication form, along with an electronic word processing summary and PDF copy (you may send both summary and PDF to oeqchawaii@doh.hawaii.gov); a 30-day consultation period ensues upon publication in the periodic bulletin.
__Act 172-12 EISPN	Submit the proposing agency notice of determination on agency letterhead, an OEQC publication form, and an electronic word processing summary (you may send the summary to oeqchawaii@doh.hawaii.gov). NO environmental assessment is required and a 30-day consultation period upon publication in the periodic bulletin.
__DEIS	The proposing agency simultaneously transmits to both the OEQC and the accepting authority, a hard copy of the DEIS, a completed OEQC publication form, a distribution list, along with an electronic word processing summary and PDF copy of the DEIS (you may send both the summary and PDF to oeqchawaii@doh.hawaii.gov); a 45-day comment period ensues upon publication in the periodic bulletin.
__FEIS	The proposing agency simultaneously transmits to both the OEQC and the accepting authority, a hard copy of the FEIS, a completed OEQC publication form, a distribution list, along with an electronic word processing summary and PDF copy of the FEIS (you may send both the summary and PDF to oeqchawaii@doh.hawaii.gov); no comment period ensues upon publication in the periodic bulletin.
__ Section 11-200-23 Determination	The accepting authority simultaneously transmits its determination of acceptance or nonacceptance (pursuant to Section 11-200-23, HAR) of the FEIS to both OEQC and the proposing agency. No comment period ensues upon publication in the periodic bulletin.

__Section 11-200-27 Determination

The accepting authority simultaneously transmits its notice to both the proposing agency and the OEQC that it has reviewed (pursuant to Section 11-200-27, HAR) the previously accepted FEIS and determines that a supplemental EIS is not required. No EA is required and no comment period ensues upon publication in the periodic bulletin.

__Withdrawal (explain)

Summary (Provide proposed action and purpose/need in less than 200 words. Please keep the summary brief and on this one page):

The proposed Lālāmilo Well A Improvements will be located within the Department of Water Supply's (DWS) property known as the "Lālāmilo Tract" on a 0.75-acre Site. The Lālāmilo Well A will be improved to meet anticipated future water demand, which involves: 1) upsizing the well pump to the original tested capacity; 2) associated upgrades for piping and appurtenances; and 3) a new control building. Also, a solenoid control valve station will be included to keep the well pump discharge piping flooded during normal pump operations. The Site will be improved to accommodate the new layout of the building and pump/piping system and improvements will be made to the existing access road, security fence, and gate. An existing 8-inch water line will be realigned and connected to accommodate the layout of the piping system from the well pump to the transmission main.

Electrical service to the new pump station will be comprised of two sources: Hawai'i Electric Light Company (HELCO) and wind power. Only one source will provide power to the station at any given time. Preferably, when wind power is generating and available to provide power, the station will utilize the renewable source of energy. A 480V, 3-phase electrical service will be provided by pad-mounted transformers on Site.

Lālāmilo Well A Improvements

Draft Environmental Assessment/ Anticipated Finding of No Significant Impact

Lālāmilo Ahupuaʻa, South Kohala District

Applicant:

Hawaiʻi Department of Water Supply

Approving Agency:

Hawaiʻi Department of Water Supply

Prepared By:

PBR HAWAII
& ASSOCIATES, INC.

November 2015

Lālāmilo Well A Improvements

Draft Environmental Assessment/Anticipated Finding of No Significant Impact

Applicant:
Hawai'i Department of
Water Supply

Approving Agency:
Hawai'i Department of
Water Supply

Prepared by:

PBR HAWAII
& ASSOCIATES, INC.

1001 Bishop Street, Suite 650
Honolulu, Hawai'i 96813

November 2015

SUMMARY

Project Name:	Lālāmilo Well A Improvements
Location:	Lālāmilo Ahupuaʻa, South Kohala District, Island and County of Hawaiʻi
Judicial District:	South Kohala
Applicant:	Hawaiʻi Department of Water Supply
Tax Map Key (TMK):	TMK (3) 6-6-001:068
Recorded Fee Owner:	Hawaiʻi Department of Water Supply
Land Area (the Site):	0.75 acres
Existing Use:	Well pump site with control building and electrical transformers.
Proposed Action:	Lālāmilo Well A will be improved to meet anticipated future water demand which involves: 1) upsizing the well pump to the original tested capacity; 2) associated upgrades for piping and appurtenances; and 3) a new control building.
Approving Agency:	Hawaiʻi Department of Water Supply
Current Land Use Designations:	*State Land Use:* Agriculture; *County Zoning:* A-5a (Agriculture) *County General Plan:* Extensive Agriculture *Special Management Area (SMA):* Not in SMA
Major Approvals Required:	NPDES Permit Grading/Building Permits
Alternatives Considered:	Alternatives considered include: • No action • Design Alternative with ADA Compliant Restroom • Design Alternative without ADA Compliant Restroom
Anticipated Determination:	Anticipated Finding of No Significant Impact (AFONSI)

TABLE OF CONTENTS

1 INTRODUCTION 1
1.1 Landowner 1
1.2 Applicant 1
1.3 Planning Consultant & Agent 1
1.4 Approving Agency 1
1.5 Compliance with State of Hawaiʻi Environmental Laws 2
1.6 Studies Contributing to this Environmental Assessment 2

2 PROJECT DESCRIPTION 3
2.1 Background Information 3
2.1.1 Location and Property Description 3
2.1.2 Existing Land Uses 3
2.1.3 Surrounding Uses 4
2.1.4 Regional Land Use History 4
2.1.5 History of the Property 12
2.2 Lālāmilo Well A Improvements 12
2.2.1 Proposed Action 12
2.2.2 Sustainable Planning and Design 13
2.2.3 Development Timeline and Preliminary Costs 13

3 DESCRIPTION OF THE NATURAL ENVIRONMENT, POTENTIAL IMPACTS, AND MITIGATION MEASURES 15
3.1 Climate 15
3.2 Geology and Topography 15
3.2.1 Soils 16
3.3 Hydrology 19
3.3.1 Hydrology and Fresh Water Resources 19
3.4 Marine Environment 20
3.5 Natural Hazards 21
3.5.1 Flood 21
3.5.2 Tsunamis 23
3.5.3 Hurricanes 23
3.5.4 Lava Flows 23
3.5.5 Earthquakes 24
3.5.6 Wildfires 25
3.6 Flora 25
3.7 Fauna 27

3.7.1 Migratory Bird Treaty Act-Protected Species 27
3.7.2 Endangered Species Act-Listed Species 28

4 DESCRIPTION OF THE HUMAN ENVIRONMENT, POTENTIAL IMPACTS, AND MITIGATION MEASURES 31
4.1 Archaeological and Historic Resources 31
4.2 Cultural Resources 32
4.3 Unexploded ordinance 33
4.4 Visual Resources 33
4.5 Noise 34
4.6 Air Quality 35
4.7 Infrastructure 35
4.7.1 Roadways and Access 36
4.7.2 Water System 36
4.7.3 Wastewater System 37
4.5.4 Drainage System 37
4.7.4 Solid Waste Disposal 38
4.7.5 Electrical and Communication Systems 38
4.8 Socio-Economic Characteristics 39
4.8.1 Population 39
4.8.2 Economy 42
4.8.3 Employment 42
4.9 Public Services and Facilities 43
4.9.1 Schools 43
4.9.2 Police, Fire and Medical Services 45
4.9.3 Recreational Facilities 46

5 CONTEXTUAL ISSUES 47
5.1 Cumulative Impacts 47
5.2 Secondary Impacts 47
5.3 Irreversible and Irretrievable Commitment of Resources 47
5.4 Probable Impacts that Cannot Be Avoided 48

6 LAND USE CONFORMANCE, POLICIES, AND CONTROLS 49
6.1 State of Hawaiʻi 49
6.1.1 State Environmental Review Law (Chapter 343, Hawaiʻi Revised Statutes) 49
6.1.2 State Land Use Law (Chapter 205, Hawaiʻi Revised Statutes) 49
6.1.3 Hawaiʻi Coastal Zone Management Program (Chapter 205A, Hawaiʻi Revised Statutes) 49
6.1.4 Hawaiʻi State Plan, Chapter 226, Hawaiʻi Revised Statutes 57

6.2 County of Hawai'i 59
6.2.1 County of Hawai'i General Plan 59
6.2.2 South Kohala Community Development Plan 61
6.2.3 County of Hawai'i Zoning 61
6.3 Major Approvals and Permits 62

7 ALTERNATIVES 63
7.1 No Action Alternative 63
7.2 Alternative Design With ADA Compliant Restroom 63
7.3 Alternative Design Without ADA Compliant Restroom 64
7.4 Alternative Locations 64

8 FINDING AND DETERMINATION 65
8.1 Significance Criteria 65
8.2 Anticipated Determination 68

9 CONSULTATION 69
9.1 Pre-Consultation 69
9.1.1 Written Comments 69
9.2 Draft Environmental Assessment 70

10 REFERENCES 73

APPENDICES

A Pre-Consultation Correspondence

B Civil Engineering Basis of Design Report

FIGURES

Figure 1: Regional Location 5

Figure 2: Tax Map Key 6

Figure 3: Aerial Photograph 7

Figure 4: State Land Use District 8

Figure 5: County Zoning 9

Figure 6: Land Use Pattern Allocation Guide 10

Figure 7: Special Management Area 11

Figure 8: Soil Survey 17

Figure 9: Agriculture Suitability 18

Figure 10: Flood Zone 22

TABLES

Table 1: Species Observed During 2013 Biological Reconnaissance Survey for Lālāmilo Wind Farm Project 27

Table 2: Demographic Characteristics 2010 40

Table 3: Capacity and Enrollment for Public Schools 44

Table 4: Approvals and Permits 62

ACRONYMS

ADA	American with Disabilities Act
AFONSI	Anticipated Finding of No Significant Impact
ALISH	Agricultural Lands of Importance to the State of Hawai'i
AMSL	Above Mean Sea Level
BMPs	Best Management Practices
CCD	Census County Division
COH	County of Hawai'i
CWRM	Commission of Water Resource Management
CZM	Coastal Zone Management
dBA	A-weighted decibels
DBEDT	State of Hawaiʻi Department of Business, Economic Development & Tourism
DLNR	State of Hawaiʻi, Department of Land & Natural Resources
DOH	State of Hawaiʻi, Department of Health
DOT	State of Hawaiʻi, Department of Transportation
DWS	County of Hawai'i, Department of Water Supply
EA	Environmental Assessment
EIS	Environmental Impact Statement
EPA	United States Environmental Protection Agency
FEMA	Federal Emergency Management Agency
FIRM	Flood Insurance Rate Map
FONSI	Finding of No Significant Impact
FUDS	Formerly Used Defense Site
GPM	Gallons per minute
HAR	Hawaiʻi Administrative Rules
HELCO	Hawaiʻi Electric Light Company
HP	Horsepower

HRS	Hawaiʻi Revised Statutes
LFR	Lālāmilo Firing Range
LSB	University of Hawaiʻi Land Study Bureau
LUPAG	County of Hawai'i General Plan Land Use Pattern Allocation Guide
MBTA	Migratory Bird Treaty Act
MGD	Millions of Gallons per Day
MW	Megawatt
NHD	National Hydrography Dataset
NOAA	National Oceanic Atmospheric Administration
NPDES	National Pollutant Discharge Elimination System
NRCS	Natural Resource Conservation Service
NWI	National Wetlands Inventory
OEQC	State of Hawaiʻi, Office of Environmental Quality Control
OHA	State of Hawaiʻi, Office of Hawaiian Affairs
RA	Removal Action
SCADA	Supervisory Control and Data Acquisition
SHPD	State Historic Preservation Division
SKCDP	South Kohala Community Development Plan
SLUD	State Land Use District
SMA	Special Management Area
TMK	Tax Map Key
UBC	Uniform Building Code
USFWS	United States Fish and Wildlife Service
USGS	United States Geological Survey
UXO	Unexploded ordinance
WMA	Waikoloa Maneuver Area

[Page Intentionally Left Blank]

1 INTRODUCTION

This Environmental Assessment (EA) is prepared in accordance with Chapter 343, Hawaiʻi Revised Statutes (HRS) for the Lālāmilo Well A Improvements.

1.1 LANDOWNER

The County of Hawaiʻi Department of Water Supply is the recorded fee owner of TMK (3) 6-6-001:068.

1.2 APPLICANT

The applicant is the County of Hawaiʻi Department of Water Supply

Contact: Department of Water Supply
County of Hawaiʻi
345 Kekūanaōʻa Street, Ste. 20
Hilo, Hawaiʻi 96720
Attn: Mr. Keith Okamoto, P.E., Manager - Chief Engineer
Telephone: (808) 961-8060

1.3 PLANNING CONSULTANT & AGENT

PBR HAWAII is the Department of Water Supply's planning consultant and agent for this environmental assessment submitted to the County of Hawaiʻi Department of Water Supply.

Contact: PBR HAWAII & Associates, Inc.
ATTN: Ms. Keliʻi Kapali
1001 Bishop Street, Suite 650
Honolulu, Hawaiʻi 96720-4224
Phone: (808) 521-5631
Fax: (808) 523-1402

1.4 APPROVING AGENCY

Contact: Department of Water Supply
County of Hawaiʻi
345 Kekūanaōʻa Street, Ste. 20
Hilo, Hawaiʻi 96720
Attn: Mr. Keith Okamoto, P.E., Manager - Chief Engineer
Telephone: (808) 961-8060

1.5 COMPLIANCE WITH STATE OF HAWAIʻI ENVIRONMENTAL LAWS

Preparation of this document is in accordance with the provisions of Chapter 343, HRS and Title 11, Chapter 200, Hawaiʻi Administrative Rules (HAR) pertaining to Environmental Impact Statements (EIS). Section 343-5, HRS establishes nine actions that "trigger" compliance and require the need for either an EA or an Environmental Impact Statement (EIS). The use of State or County lands or funds is one of the nine "triggers." Since the proposed improvements would be made to the existing Lālāmilo Well, and will involve the use of County land or funds, compliance with HRS and HAR is required and therefore the preparation of an EA is required.

1.6 STUDIES CONTRIBUTING TO THIS ENVIRONMENTAL ASSESSMENT

The information contained in this report has been developed from site visits, generally available information regarding the characteristics of the Site and surrounding areas, previous environmental assessments and technical studies. A technical study, a civil engineering "basis of design," is provided as Appendix B of this EA.

2 PROJECT DESCRIPTION

2.1 BACKGROUND INFORMATION

2.1.1 Location and Property Description

The proposed Lālāmilo Well A Improvements will be located within the Department of Water Supply's property known as the "Lālāmilo Tract" in the Lālāmilo *Ahupua'a*, South Kohala District, on the northwest portion of Hawai'i island (Figure 1: Regional Map). The Site is identified as TMK (3) 6-6-001:068, and encompasses a total of 0.75 acres (Figure 2: Tax Map Key).

Access to the Site is provided from Lālāmilo-Parker Access Road via Queen Ka'ahumanu Highway (Figure 3: Aerial Photograph). The Site is located 2.9 miles east of the Queen Ka'ahumanu Highway.

The existing Lālāmilo Well A was originally outfitted in 1980 with a 700 gallons per minute (gpm) pump and 350 horsepower (hp) motor. The Site includes a small pump control building, two electrical transformers and access road enclosed by a chain link fence and double swing gate.

Current land use designations for the Site are:

- State Land Use District: Agriculture (Figure 4: State Land Use District)
- County Zoning: Agriculture (A-5a) (Figure 5: County Zoning)
- County General Plan: Extensive Agriculture (Figure 6: County General Plan)
- Special Management Area (SMA): Not within SMA (Figure 7: Special Management Area)

2.1.2 Existing Land Uses

The Site is already improved with a Department of Water Supply (DWS) small pump control building, two electrical transformers and an access road enclosed by a chain link fence and double swing gate. The Site is surrounded by uninhabited, scarcely vegetated land that lies within the State Land Use Commission's Agricultural Land Use District. The Site's existing well and related Lālāmilo Water System was built to service Kawaihae. Subsequently, it was expanded to service the development of resort areas in South Kohala including Puakō, the Mauna Kea Resort, and Mauna Lani Resorts (Hawai'i County Planning Department, 2008). Currently the Lālāmilo Water System supplies an average of 5.1 million gallons per day to the residential,

resort, park, industrial and commercials customers spanning from Mauna Lani Resort to Kawaihae (Honolulu Star Advertiser, 2015).

2.1.3 Surrounding Uses

The Site is situated within an area primarily designated for agricultural uses within the State Land Use District Boundaries and County Zoning. According to the County of Hawai'i, the Site is insulated by parcels within the agricultural area as defined in the South Kohala Community Development Plan (SKCDP). The Site is surrounded by more than 8,000 acres owned by the State of Hawaiʻi for residential and agricultural uses; additional neighboring landowners include the Waikoloa Village Association and PR Puu Pa LLC. The Lālāmilo Wind Farm is being developed on lands that the County of Hawaiʻi is leasing from the State of Hawai'i that is approximately 955 feet east of the Site, while more than 19,000 acres to the southeast and southwest of the Site are designated for industrial and agriculture uses.

2.1.4 Regional Land Use History

The first settlers of the South Kohala district are estimated to have arrived during 750-1000 AD. It is recorded that the coastal resources and beaches supported seasonal settlements, initially by early Polynesians that migrated to the cooler upland areas. Future generations developed fishing villages on the leeward coast of the district and started cultivation of *lo'i kalo* terraces along streams south of the Kohala Mountains.

Within the South Kohala district, both Kawaihae and Waimea were politically important regions as demonstrated by the regular visits of high ranking *ali'i* (chiefs) to the area that continued through the reigns of King Kamehameha I, that united the Hawaiian Islands in 1810 and his son Liholiho, Kamehameha II. During the late 18th century, while anchored in Kawaihae, British Captain George Vancouver gifted cattle to King Kamehameha I, who immediately placed a *kapu* that prevented the cattle from being killed. During the mid-19th to 20th century, as populations of cattle grazing throughout Kohala grew, the district was heavily influenced by the *paniolo* (Hawaiian cowboy) way of life. While ranching and agriculture long-served as the economic base for the region, in the late 20th century, tourism would become the prevailing industry with the establishment of three world class resorts in South Kohala (Hawai'i County Planning Department, 2008). Over the last several decades, these resorts have shaped land use and development patterns in the region.

Path: Q:\Hawaii\Lalamilo Well\GIS\Projects\Regional Location.mxd

DATE: 10/13/2015

LEGEND

- Lālāmilo Well A

Figure 1
Regional Location

Lālāmilo Well

Island of Hawai'i

North

Linear Scale (feet)

0 1,500 3,000

PBR HAWAII & ASSOCIATES, INC.

Source: ESRI Online Basemap (2013). County of Hawai'i (2014).

Disclaimer: This graphic has been prepared for general planning purposes only and should not be used for boundary interpretations or other spatial analysis.

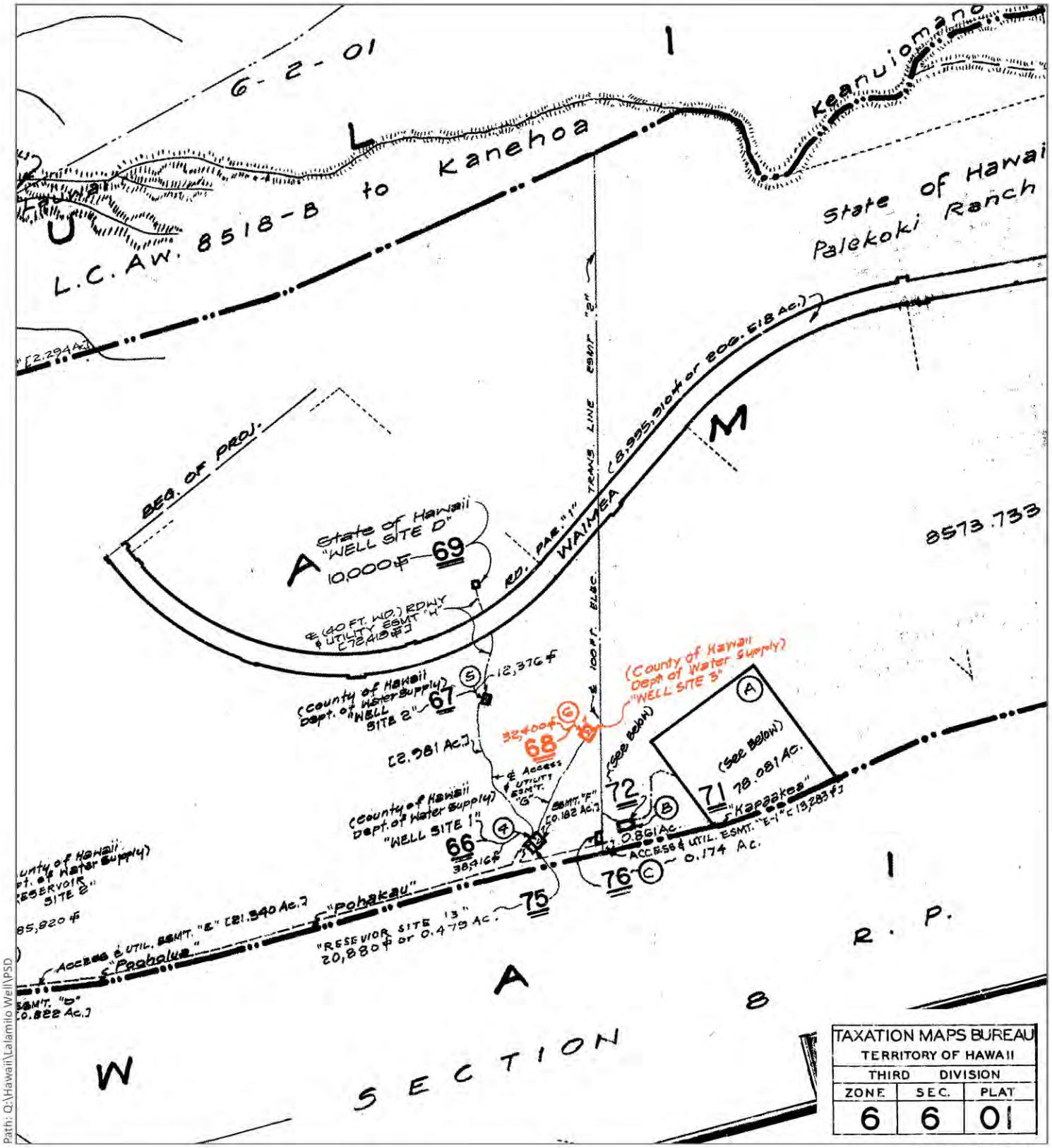

Path: Q:\Hawaii\Lalamilo Well\PSD

DATE: 9/27/2015

LEGEND

- Lālāmilo Well A

Figure 2
Tax Map Key

Lālāmilo Well

Island of Hawai'i

North

Linear Scale (feet)
0 1,000 2,000

PBR HAWAII & ASSOCIATES, INC.

Source: County of Hawaii (1983).

Disclaimer: This graphic has been prepared for general planning purposes only and should not be used for boundary interpretations or other spatial analysis.

Path: Q:\Hawaii\Lalamilo Well\GIS\Projects\Aerial.mxd

Source: Pictometry Online (2012).

Disclaimer: This graphic has been prepared for general planning purposes only and should not be used for boundary interpretations or other spatial analysis.

Figure 3
Aerial Photograph

Lālāmilo Well

Island of Hawai'i

North

PBR HAWAII & ASSOCIATES, INC.

DATE: 10/13/2015

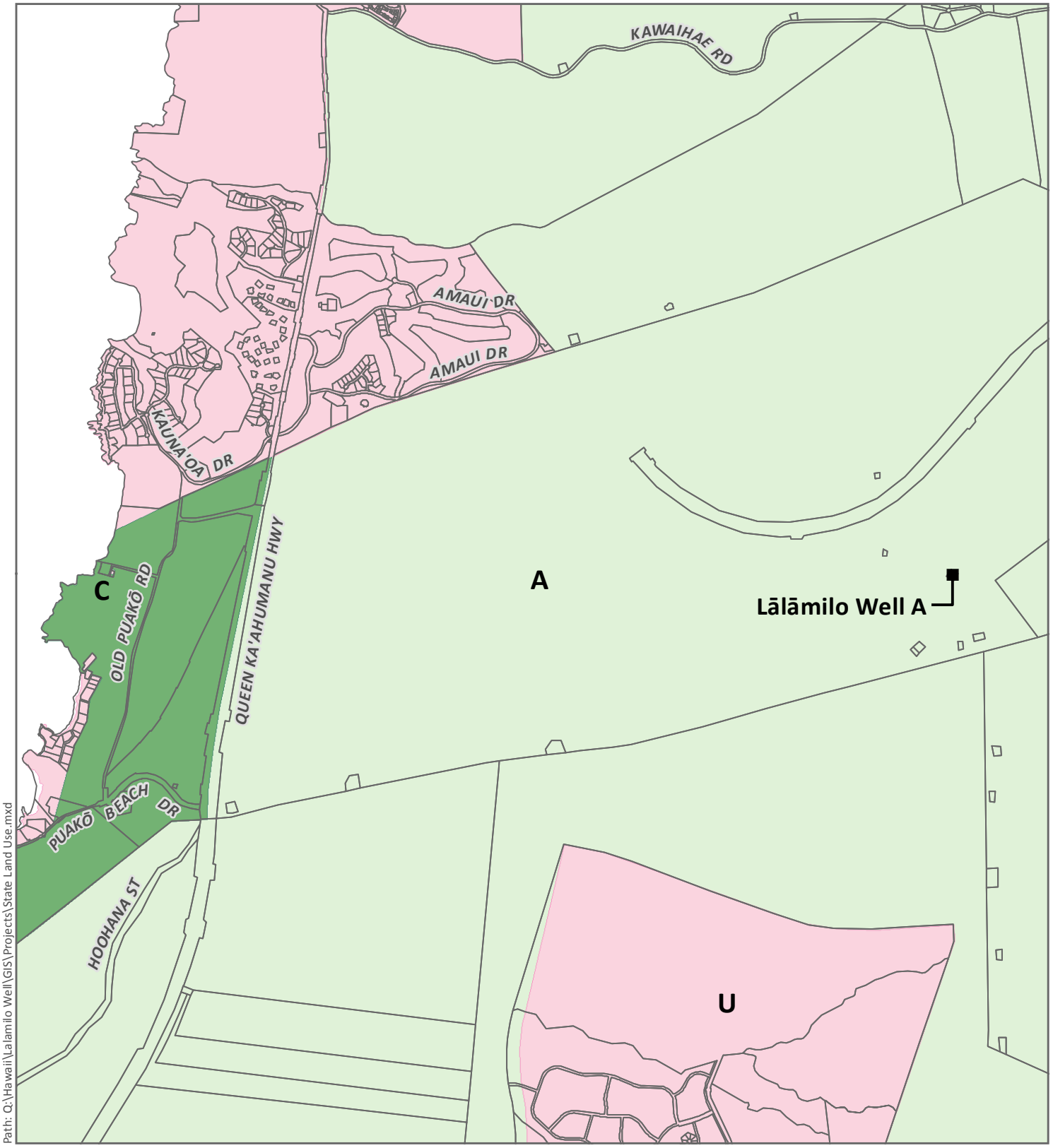

DATE: 10/13/2015

LEGEND

- ■ Lālāmilo Well A
- A: Agricultural District
- C: Conservation District
- U: Urban District

Figure 4
State Land Use Distirct

Lālāmilo Well

Island of Hawai'i

North

Linear Scale (feet)
0 1,500 3,000

PBR HAWAII & ASSOCIATES, INC.

Source: State Land Use Commission (2014).

Disclaimer: This graphic has been prepared for general planning purposes only and should not be used for boundary interpretations or other spatial analysis.

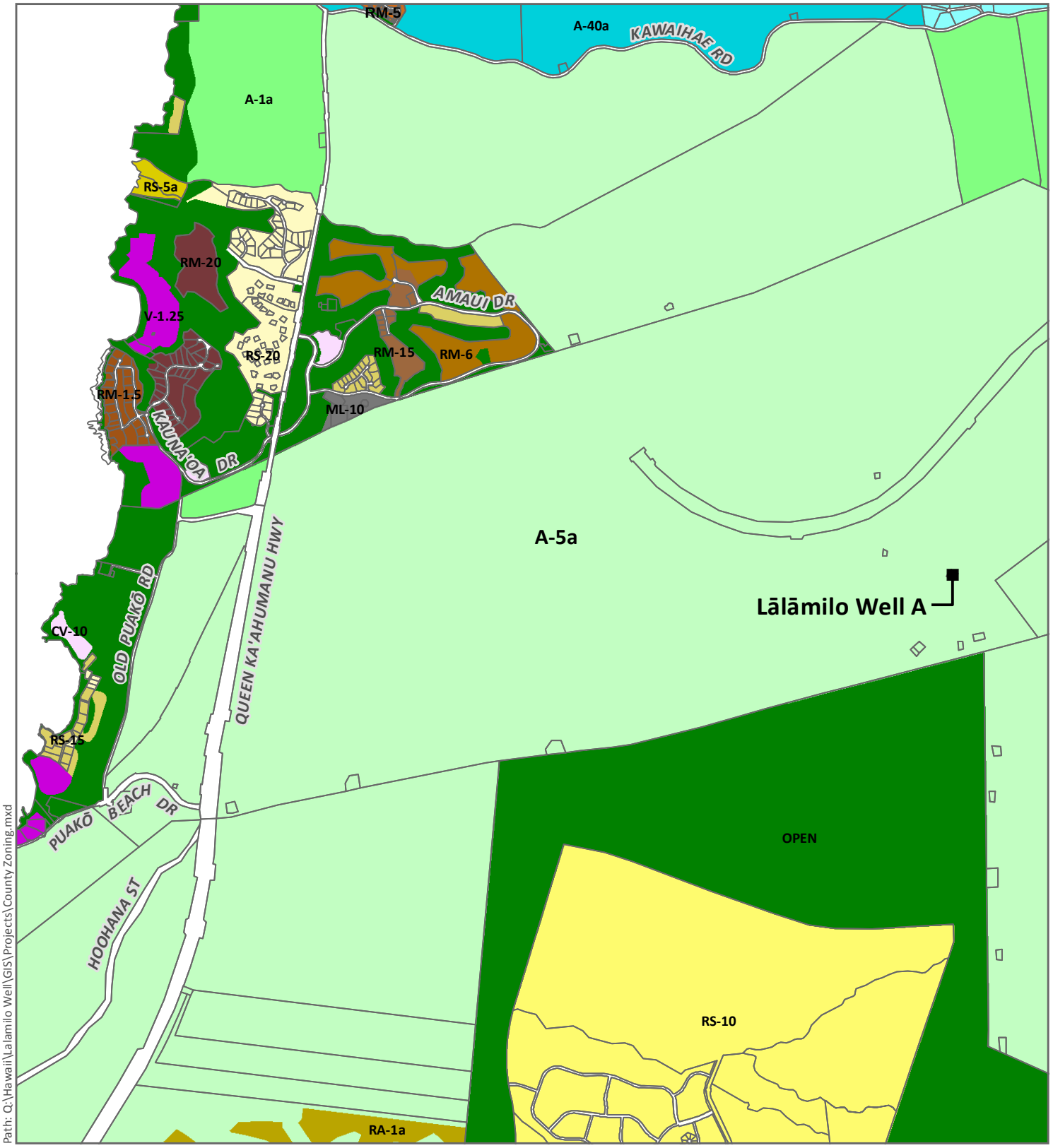

DATE: 10/13/2015

LEGEND

- Lālāmilo Well A
- A-1a
- A-3a
- A-40a
- A-5a
- CV-10
- ML-10
- OPEN
- RA-1a
- RM-1.5
- RM-15
- RM-20
- RM-5
- RM-6
- RS-10
- RS-15
- RS-20
- RS-5a
- V-1.25

Source: County of Hawaii (2014).

Disclaimer: This graphic has been prepared for general planning purposes only and should not be used for boundary interpretations or other spatial analysis.

Figure 5
County Zoning

Lālāmilo Well

Island of Hawai'i

North

Linear Scale (feet)

0 1,500 3,000

PBR HAWAII & ASSOCIATES, INC.

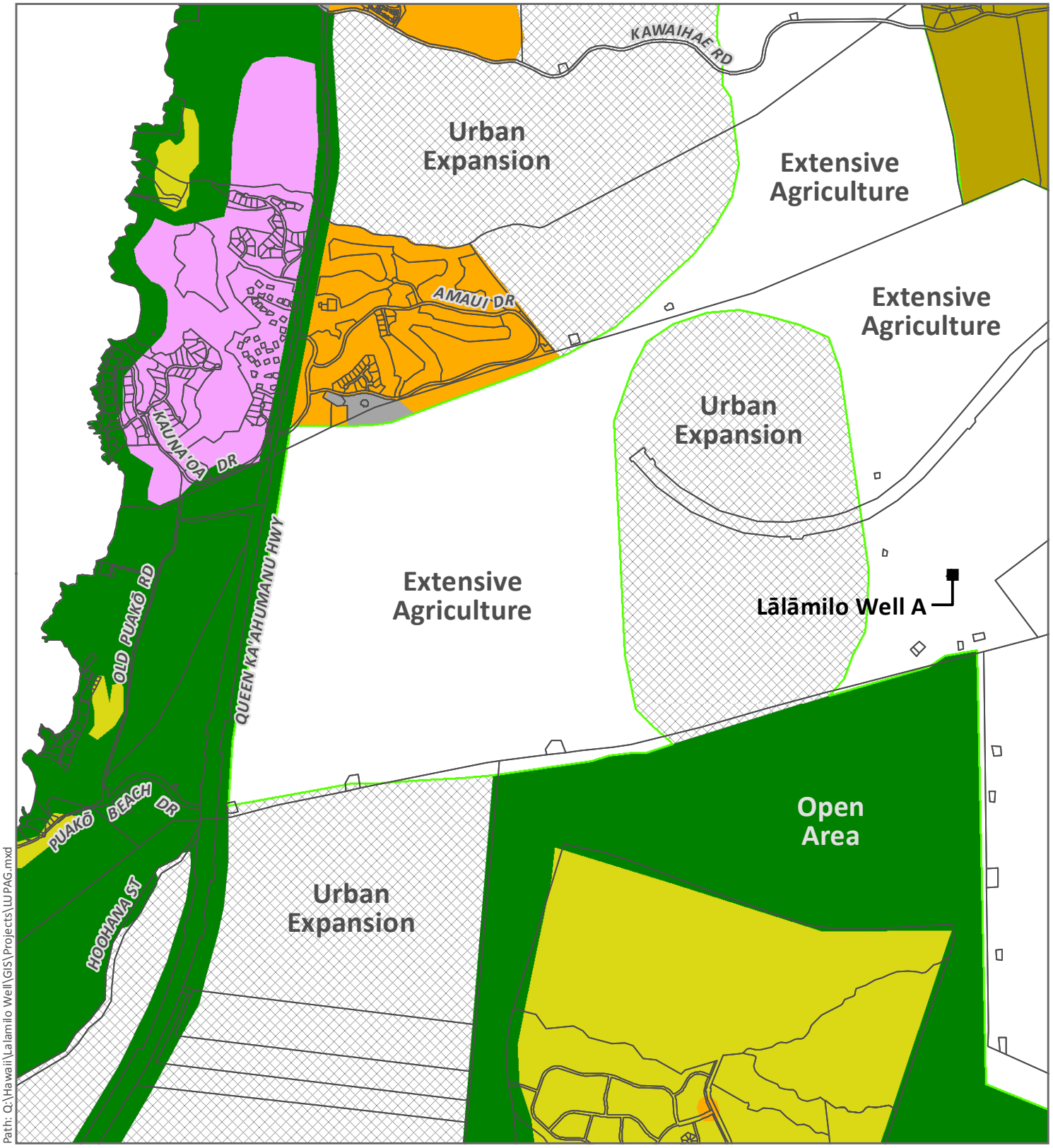

DATE: 10/13/2015

LEGEND

- ■ Lālāmilo Well A
- Extensive Agriculture
- Industrial
- Low Density Urban
- Medium Density Urban
- Open Area
- Resort Node
- Rural
- Urban Expansion

Figure 6
Land Use Pattern Allocation Guide

Lālāmilo Well

Island of Hawai'i

North

Linear Scale (feet)
0 1,500 3,000

PBR HAWAII & ASSOCIATES, INC.

Source: County of Hawaii (2012).

Disclaimer: This graphic has been prepared for general planning purposes only and should not be used for boundary interpretations or other spatial analysis.

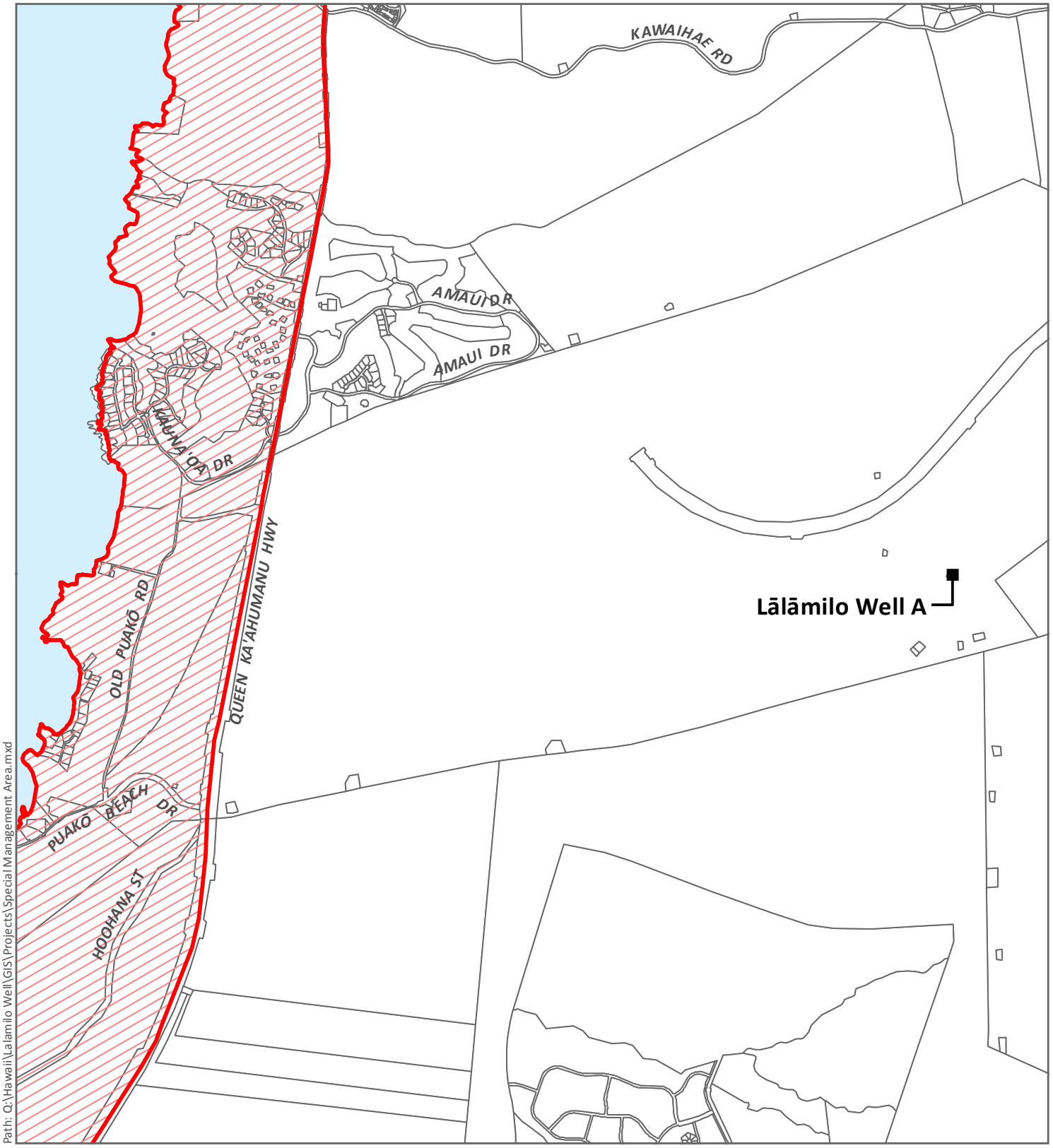

DATE: 10/13/2015

LEGEND

- ■ Lālāmilo Well A
- Special Management Area

Figure 7
Special Management Area

Lālāmilo Well

Island of Hawai'i

North

Linear Scale (feet)
0 1,500 3,000

PBR HAWAII & ASSOCIATES, INC.

Source: County of Hawaii (2013).

Disclaimer: This graphic has been prepared for general planning purposes only and should not be used for boundary interpretations or other spatial analysis.

2.1.5 History of the Property

In 1943, nearly 123,000 acres of land in the Waimea-Waikoloa area were leased by the U.S. War Department for use as a troop training area (Escott, 2008). This lease facilitated the Site becoming part of the U.S. Navy's 91,000-acre Waikoloa Maneuver Area, which included the 9,141-acre Lālāmilo Firing Range. The Waikoloa Maneuver Area was returned to Parker Ranch in 1946. The Lālāmilo Firing Range, through a permit granted by the Territory of Hawaiʻi, was retained by the U.S. Marines as a training area and camp site until 1953 when the lands once again reverted to leased cattle pasture administered by the Territory of Hawaiʻi. Cleanup of unexploded ordnance (UXO) within the Waikoloa Maneuver Area is still ongoing. Following World War II, the lands in the vicinity of the Project Area were again used as cattle pasture. (Tetra Tech, Inc., 2014)

Beginning in the 1950s, modern development was focused along the coastal land of Lālāmilo around the Villages of Waimea and Waikoloa. During the 1980s, large resort properties were developed along the coast. In order to meet water requirements of the resort developments, the DWS commenced drilling of wells and establishment of its Lālāmilo Water System to service the surrounding area.

2.2 LĀLĀMILO WELL A IMPROVEMENTS

2.2.1 Proposed Action

This Project involves the upsizing of the existing well pump, piping and appurtenances, including a new control building. A solenoid control valve station will also be included to keep the well pump discharge piping flooded during normal pump operations. The Site will be improved to accommodate the new layout of the building and pump/piping system. Site improvements will include grading, improvements to the access road, and improving the security fence and gate. The existing 8-inch water line will be realigned and connected to accommodate the layout of the piping system from the well pump to the transmission main.

Electrical service to the new pump station will comprise of two sources: Hawaiʻi Electric Light Company (HELCO) and wind power. Only one source will provide power to the station at any given time. Preferably, when wind power is generating and available to provide power, the station will utilize the renewable source of energy. A 480V, 3-phase electrical service will be provided by pad-mounted transformers on site.

The plans and specifications shall be in accordance to the County of Hawaiʻi, Department of Water Supply Water System Standards 2002, as amended.

2.2.2 Sustainable Planning and Design

The Department of Water Supply is proposing a separate project to develop a small wind farm in the immediate vicinity to provide most of the power required for the Lālāmilo Wells. The use of wind power would reduce the requirement to rely solely on electricity generated by the burning of fossil fuel to operate Well A.

2.2.3 Development Timeline and Preliminary Costs

Construction is expected to commence once plans and permit applications are approved. The proposed improvements to Lālāmilo Well A are expected to be completed by 2020. The total cost for design and construction is estimated to be approximately $2.7 million.

[Page Intentionally Left Blank]

3 DESCRIPTION OF THE NATURAL ENVIRONMENT, POTENTIAL IMPACTS, AND MITIGATION MEASURES

3.1 CLIMATE

Existing Conditions

Generally, the Hawaiʻi Islands experience two seasons, warm and dry summers (May through September) as well as cool and wet winters (October through April). The climate of Hawaiʻi Island is influenced by its geologic features. Mauna Loa (13,653-foot summit elevation) and Mauna Kea (13,796-foot summit elevation) dominate ground-based atmospheric influences and affect trade winds. The South Kohala District is characterized as having a predominately dry climate. According to The Rainfall Atlas of Hawaiʻi, the Site receives an average annual rainfall of approximately 11.7 inches (Giambelluca, et al., 2013). Majority of annual precipitation occurs during months of October and March. The average temperature nearby the Site varies from 54 degrees Fahrenheit (°F) to 74 °F (COH, 2012).

Potential Impacts and Mitigation Measures

The Lālāmilo Well A Improvements are not expected to have a significant impact on the region's climate, and no mitigation measures are warranted or planned.

3.2 GEOLOGY AND TOPOGRAPHY

Existing Conditions

The Project is located on the lower (western) flank of Mauna Kea volcano and is within the U.S. Geological Survey (USGS) mapped stratigraphic formation "hm," Hāmākua Volcanic Series (Pleistocene) (Wolfe and Morris, 1996; Sherrod et al. 2007). This unit consists of lava flows discontinuously mantled by unmapped, windblown, tephra-fall, and colluvial deposits. The Site is located at an elevation of 1,200 feet, and the surrounding Lālāmilo Water System corridor slopes down to the Queen Ka'ahumanu Highway with a ground slope between 6 and 7 percent (DLNR, 1980). Topography of the site consists of a relatively flat plateau, descending to the west and north of the Project Area.

Potential Impacts and Mitigation Measures

The proposed project is not expected to significantly impact the topographic nature of the Site relative to surrounding lands; therefore, no mitigation measures are proposed.

3.2.1 Soils

Existing Conditions

Three soil suitability studies prepared for lands in Hawaiʻi describe the physical attributes of land and the relative productivity of different land types for agricultural production; these are: 1) the U.S. Department of Agriculture Natural Resources Conservation Service (NRCS) Soil Survey; 2) the University of Hawaiʻi Land Study Bureau (LSB) Detailed Land Classification; and 3) the State Department of Agriculture's Agricultural Lands of Importance to the State of Hawaiʻi (ALISH) system. The three soil suitability studies are discussed below.

NRCS Soil Survey

According to the *Soil Survey of Island of Kauai, Oahu, Maui, Molokai, and Lanai, State of Hawaiʻi*, prepared by the U.S. Department of Agriculture (1972), the Property contains soil from the lava flows association, which is characterized as gently sloping to excessively drained soils that are coarse-textured and medium-textured formed in volcanic ash, pumice and cinders.

Classification of the soil underlying the Site is "Kawaihae extremely stony very fine sand loam" (Figure 8: Soil Survey) (Sato, 1973). Used mainly for grazing, Kawaihae soils are on leeward coastal uplands at elevations ranging from sea level to 1,500 feet. This dark reddish brown soil is of variable thickness, typically from several inches to about three feet, and it overlies bedrock *pahoehoe*. Outcrops of the bedrock are common. According to NRCS, the soil has only a moderate erosion hazard. During dry and windy weather, however, substantial amounts of it are moved around by the wind (DLNR, 1980).

Land Study Bureau Detailed Land Classification

The University of Hawaiʻi LSB *Detailed Land Classification, Island of Hawaiʻi* classifies non-urban land by a five-class productivity rating system, using the letters A, B, C, D and E, where "A" represents the highest class of productivity and "E" the lowest. The productivity rating system was based on soil texture, structure, depth, drainage, parent material, stoniness, topography, climate, and rainfall in a given area. The soils at the Site are classified as "E" (Figure 9), which signifies land that is not suitable for agriculture.

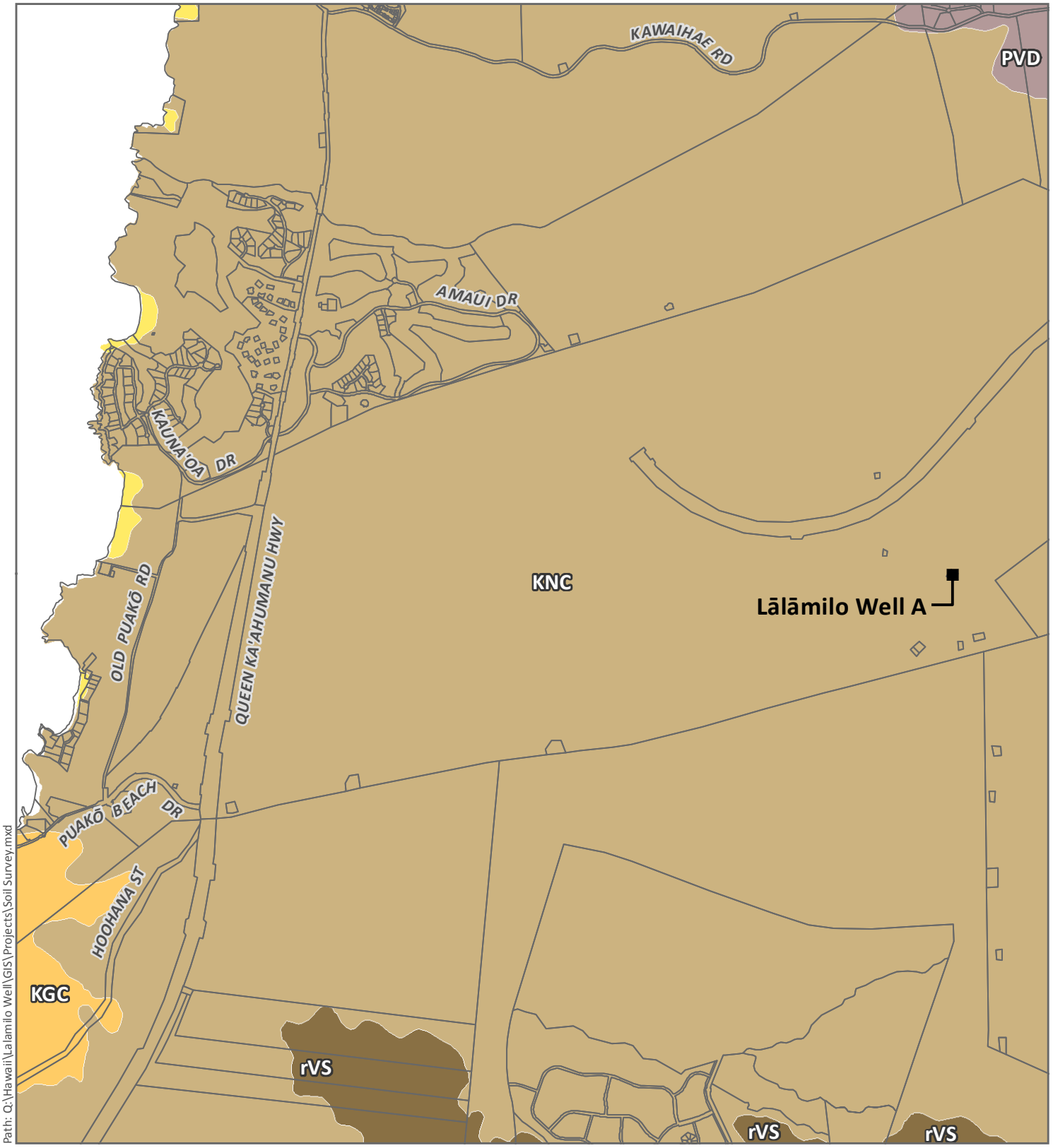

Path: Q:\Hawaii\Lalamilo Well\GIS\Projects\Soil Survey.mxd

DATE: 10/13/2015

LEGEND

- Lālāmilo Well A
- BH: Beaches
- KGC: Kamakoa very fine sandy loam, 0-10% slopes
- KNC: Kawaihae extremely stony very fine sandy loam, 6-12% slopes
- PVD: Puu Pa extremely stony very fine sandy loam, 6-20% slopes
- rVS: Very stony land

Source: U.S. Department of Agriculture Natural Resource Conservation Service.

Disclaimer: This graphic has been prepared for general planning purposes only and should not be used for boundary interpretations or other spatial analysis.

Figure 8
Soil Survey

Lālāmilo Well

Island of Hawai'i

North

Linear Scale (feet)

0 1,500 3,000

PBR HAWAII & ASSOCIATES, INC.

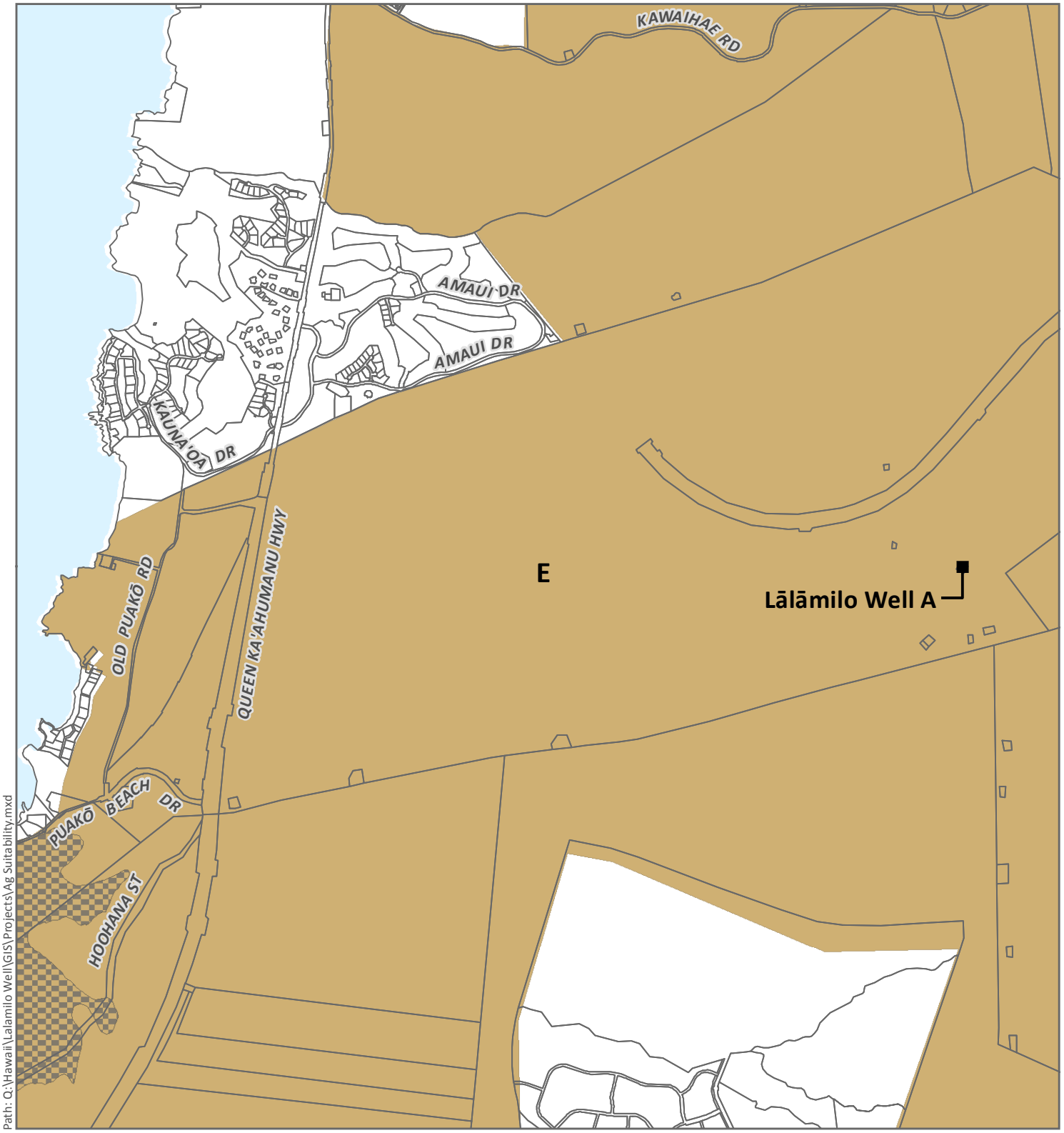

DATE: 10/13/2015

LEGEND

■ Lālāmilo Well A

ALISH Classification
- Prime ALISH
- Other ALISH
- Unique ALISH
- Not ALISH

Land Study Bureau (LSB) Ratings
- A: Excellent
- B: Good
- C: Fair
- D: Poor
- E: Very Poor
- Not Rated

Figure 9
Agricultural Suitability

Lālāmilo Well

Island of Hawai'i

North

Linear Scale (feet)
0 1,500 3,000

PBR HAWAII & ASSOCIATES, INC.

Source: State Department of Agriculture 1977). University of Hawai'i Land Study Bureau (1965).

Disclaimer: This graphic has been prepared for general planning purposes only and should not be used for boundary interpretations or other spatial analysis.

Agricultural Lands of Importance to the State of Hawai'i

The Agricultural Lands of Importance to the State of Hawai'i (ALISH) system classifies land as either "Prime," "Unique," or "Other" (lands of importance to the State of Hawai'i). The remaining land is not classified. The land under the Site does not fall into the category of Agricultural Lands of Importance to the State of Hawai'i.

Potential Impacts and Mitigation Measures

The Lālāmilo Well A Improvements are focused on existing structures and construction of a new control building on the existing Site. Construction and permanent BMPs will be implemented to minimize and control soil erosion and dust. Construction BMPs may include providing gravel vehicular entrances, installing silt fencing, diverting stormwater runoff to retention/detention basins, utilizing diversion berms and ditches, installing dust screens, establishing temporary ground cover, and watering loose soils. Specific construction BMPs will be specified in the project's NPDES permit(s).

No impact to agricultural productivity is expected from development of the Lālāmilo Well A Improvements as the Site presently is not well suited for most agricultural pursuits, as reflected by its LSB rating of "E" and its unclassified status by the ALISH system (Figure 9).

3.3 HYDROLOGY

The Site is located within the Waimea aquifer.

A watershed area captures rainfall and atmospheric moisture from the air and allows the water to drip slowly into underground aquifers or enter stream channels and eventually the ocean. Thus, watershed health has a direct impact on the quality of surface water, groundwater, and near shore marine water. This section provides an analysis of the Waimea watershed area as it relates to these water resources.

3.3.1 Hydrology and Fresh Water Resources

Existing Conditions

The Site is within the boundaries of the Island of Hawai'i Waimea aquifer (Aquifer Code 8030; (State of Hawai'i, 2008). The State-identified sustainable yield for the Waimea aquifer is 24 MGD. There are eight existing large-capacity deep groundwater wells in the Lālāmilo-Parker well system operated by the Department of Water Supply. The wells provide potable water for the system

serving Puakō to Kawaihae in the region of South Kohala. The wells range in depth from 1,106 feet to 1,250 feet (337 meters to 381 meters). During construction, the wells would be used temporarily as a source of water to irrigate exposed soils for the purpose of fugitive dust control.

There are no perennial streams, intermittent streams or wetlands within the Project Area, based on a review of mapping from the National Wetlands Inventory (NWI) (USFWS, 2014) and National Hydrography Dataset (NHD , 2015) and based onsite observations.

Potential Impacts and Mitigation Measures

The proposed project is not anticipated to have a significant adverse impact on surface water resources. There are no perennial streams or wetlands on the Site. While there will be an increase in the amount of impermeable surface area, any increase runoff generated onsite will be detained to ensure that the peak rate of runoff leaving the Site will not increase over existing conditions. During construction, best management practices for managing stormwater and erosion control will be employed so as to avoid temporary inputs of sediment and pollutants into surface water and nearshore marine resources. The land that is disturbed by construction will be re-vegetated with a combination of Native Hawaiian and other non-invasive plants shortly after the completion of the construction period.

3.4 MARINE ENVIRONMENT

Existing Conditions

The Site is located approximately 3.0 miles *mauka* (upland) from the Hāpuna Beach State Recreation Area, the nearest coastline. Near shore marine waters at Hāpuna Beach downstream of the Site, are classified as Class "AA" waters by the State Department of Health (DOH) (State of Hawai'i Department of Health, 2013).

According to DOH water quality standards, "it is the objective of Class AA waters that these waters remain in their natural pristine state as nearly as possible with an absolute minimum of pollution or alteration of water quality from any human-caused source or actions" (HAR §11-54-03(c)(2)).

Potential Impacts and Mitigation Measures

The Lālāmilo Well A Improvements are not expected to have a significant impact on marine water quality. Improvements will be focused on the existing well pump, piping and appurtenances, as well as the construction of the new control building. Given the relatively small

size of the control building (designed area ranging from 821-839 square feet); there will be a negligible increase in the amount of impermeable surface area. Thus, direct discharges of stormwater runoff into marine waters are not expected to occur.

During construction, best management practices for managing stormwater and erosion control will be employed so as to avoid temporary inputs of sediment and pollutants to marine waters. The discharge of pollutants from point sources is generally regulated through the National Pollutant Discharge Elimination System (NPDES). An NPDES permit if required will specify measures to prevent stormwater discharges from affecting coastal water quality. Even if an NPDES permit is not required, best management practices shall be incorporated during construction to prevent storm water discharges from affecting coastal water quality. Permanent best management practices like erosion controlling vegetation shall be incorporated into the design to limit post construction levels of erosion.

3.5 NATURAL HAZARDS

Hawaiʻi is susceptible to potential natural hazards, such as flooding, tsunami inundation, hurricanes, lava flows, earthquakes and wildfires. This section provides an analysis of the Site's vulnerability to such hazards.

The State of Hawaiʻi Department of Defense, Office of Civil Defense operates a system of civil defense sirens throughout the State to alert the public of emergencies and natural hazards, particularly tsunamis and hurricanes.

3.5.1 Flood

Existing Conditions

The Federal Emergency Management Agency (FEMA) publishes flood information in the form of Flood Insurance Rate Maps (FIRM) used by government and insurance agencies to determine the relative potential for damage during flood events. During the pre-consultation process the Department of Land and Natural Resources' Engineering Division confirmed the entire Site is located in Zone X (flood fringe area), an area determined to be located outside of the flood plain (Figure 10Hawaiian: Flood Zone).

Potential Hazards and Mitigation Measures

The Lālāmilo Well A Improvements are not anticipated to increase the Site's exposure to flooding. The Site is located outside of the flood plain so no mitigation is planned.

Flood Hazard Assessment Report

www.hawaiinfip.org

Property Information

COUNTY:	HAWAII
TMK NO:	(3) 6-6-001:068
WATERSHED:	POHAKULOA
PARCEL ADDRESS:	UNKNOWN ADDRESS KAMUELA, HI 96743

Notes:

Flood Hazard Information

FIRM INDEX DATE:	APRIL 02, 2004
LETTER OF MAP CHANGE(S):	NONE
FEMA FIRM PANEL:	1551660282C
PANEL EFFECTIVE DATE:	PANEL NOT PRINTED

THIS PROPERTY IS WITHIN A TSUNAMI EVACUTION ZONE: NO
FOR MORE INFO, VISIT: http://www.scd.hawaii.gov/

THIS PROPERTY IS WITHIN A DAM EVACUATION ZONE: NO
FOR MORE INFO, VISIT: http://dlnreng.hawaii.gov/dam/

0 0.30 0.60 mi

Disclaimer: The Hawaii Department of Land and Natural Resources (DLNR) assumes no responsibility arising from the use, accuracy, completeness, and timeliness of any information contained in this report. Viewers/Users are responsible for verifying the accuracy of the information and agree to indemnify the DLNR, its officers, and employees from any liability which may arise from its use of its data or information.

If this map has been identified as 'PRELIMINARY', please note that it is being provided for informational purposes and is not to be used for flood insurance rating. Contact your county floodplain manager for flood zone determinations to be used for compliance with local floodplain management regulations.

FLOOD HAZARD ASSESSMENT TOOL LAYER LEGEND
(Note: legend does not correspond with NFHL)

SPECIAL FLOOD HAZARD AREAS (SFHAs) SUBJECT TO INUNDATION BY THE 1% ANNUAL CHANCE FLOOD - The 1% annual chance flood (100-year), also know as the base flood, is the flood that has a 1% chance of being equaled or exceeded in any given year. SFHAs include Zone A, AE, AH, AO, V, and VE. The Base Flood Elevation (BFE) is the water surface elevation of the 1% annual chance flood. Mandatory flood insurance purchase applies in these zones:

	Zone A: No BFE determined.
	Zone AE: BFE determined.
	Zone AH: Flood depths of 1 to 3 feet (usually areas of ponding); BFE determined.
	Zone AO: Flood depths of 1 to 3 feet (usually sheet flow on sloping terrain); average depths determined.
	Zone V: Coastal flood zone with velocity hazard (wave action); no BFE determined.
	Zone VE: Coastal flood zone with velocity hazard (wave action); BFE determined.
	Zone AEF: Floodway areas in Zone AE. The floodway is the channel of stream plus any adjacent floodplain areas that must be kept free of encroachment so that the 1% annual chance flood can be carried without increasing the BFE.

NON-SPECIAL FLOOD HAZARD AREA - An area in a low-to-moderate risk flood zone. No mandatory flood insurance purchase requirements apply, but coverage is available in participating communities.

	Zone XS (X shaded): Areas of 0.2% annual chance flood; areas of 1% annual chance flood with average depths of less than 1 foot or with drainage areas less than 1 square mile; and areas protected by levees from 1% annual chance flood.
	Zone X: Areas determined to be outside the 0.2% annual chance floodplain.

OTHER FLOOD AREAS

	Zone D: Unstudied areas where flood hazards are undetermined, but flooding is possible. No mandatory flood insurance purchase apply, but coverage is available in participating communities.

Q:\Hawaii\Lalamilo Well\PSD

Figure 10
Flood Zone
Lālāmilo Well

3.5.2 Tsunamis

Existing Conditions

Twenty-five of the tsunamis recorded since 1812 had an adverse impact on the island of Hawaiʻi; seven caused major damage and three were generated locally. According to the *Hawaiʻi County Multihazard Mitigation Plan,* the most devastating tsunamis to hit the Island of Hawai'i this century occurred in 1946 and 1960, both inflicting the worst damage on the northeastern coast of the island. Locally generated tsunamis are most frequent along the south coast, and the probability of impacts to the South Kohala district is lower than in other areas.

No portion of the Project Area is in the Civil Defense Tsunami Evacuation Zone (NOAA, 2015)

Potential Hazards and Mitigation Measures

The Lālāmilo Well A Improvements are not anticipated to increase the Site's exposure to tsunamis. The Site is located outside of the Civil Defense Tsunami Evacuation Zone.

3.5.3 Hurricanes

Existing Conditions

Records show that strong wind storms have struck all major islands in the Hawaiian Island chain since the beginning of history. The first officially recognized hurricane in Hawaiian waters was Hurricane Hiki in August of 1950. Since 1982 three hurricanes have impacted Hawaiʻi: Hurricane ʻIwa in 1982, Hurricane ʻIniki in 1992, and Hurricane Iselle in 2014. While it is difficult to predict these natural occurrences, it is reasonable to assume that future events could likely occur given the recent record.

Potential Impacts and Mitigation Measures

In the event of a hurricane, the potential impact of destructive winds and torrential rainfall will be mitigated through compliance with the 2006 International Building Code for any new construction.

3.5.4 Lava Flows

Based on probability of coverage by lava flows, the volcanic hazard zone map for Hawaiʻi Island divides the island into zones ranked from one (1) through nine (9), with one (1) being the area of greatest hazard and nine (9) being the area of least hazard. Other direct volcanic hazards such as

tephra fallout, ground cracking and settling were not specifically considered in the development of the volcanic hazard zone map. These hazards, however, tend to be greatest in the highest lava flow hazard areas. Two volcanoes, Mauna Kea and Kohala are found in the northern part of the island. The Site is located within Zone 8 that includes the lower slopes of Mauna Kea. The Zone 8 designation indicates that none of the area has been covered in lava over the last 750 years and only a small percent of the area has been covered in lava over the past 10,000 years (USGS, 1997).

Hazard zones from lava flows are based chiefly on the location and frequency of both historic and prehistoric eruptions. Historic eruptions include those for which there are written records, beginning in the early 1800's, and those known from oral traditions. Knowledge of prehistoric eruptions is based on geologic mapping and dating flows of each volcano. The hazard zones also take into account topographic features of the volcanoes that will affect the distribution of lava flows. Finally, the hazard assessment is based on the assumption that future eruptions will be similar to those in the past.

Lava flows present potential threats to homes, infrastructure, natural and historic resources, and entire communities. The areas exposed to the highest risk from lava flows are those situated down slope and in close proximity to the active rift zones. The Site does not occur within the vicinity of active rift zones.

Potential Impacts and Mitigation Measures

The Lālāmilo Well A Improvements are not anticipated to increase the Site's exposure to lava flows, especially as the site is in Zone 8 with an associated low degree of risk of hazard.

3.5.5 Earthquakes

In Hawaiʻi, most earthquakes are linked to volcanic activity, unlike other areas where a shift in tectonic plates is the cause of an earthquake. Earthquakes can also produce other ground failure hazards including liquefaction, landslide, subsidence and surface rupture. Earthquakes can also generate local tsunamis. Each year, thousands of earthquakes occur in Hawaiʻi, the vast majority of which are so small they are detectable only with highly sensitive instruments. However, moderate and disastrous earthquakes have occurred in the islands.

Since 1868, thirteen disastrous earthquakes of magnitude 6 or greater have occurred in Hawaiʻi County. The most recent series of earthquakes, with magnitudes of 6.7 and 6.0, occurred at Kīholo Bay on October 15, 2006. These earthquakes resulted in more than $100 million in

damages to the northwest area of the island (RMS, 2006). The largest ground motions were recorded in Waimea and Hawi, though the earthquake was centered in Kona.

The Uniform Building Code (UBC) (Chapter 5 of the Hawaiʻi County Code), designates Hawaiʻi County into six seismic zones, ranging from 0 (no chance of severe ground shaking) to 4 (10 percent chance of severe shaking in a 50-year interval). The County of Hawaiʻi has a UBC seismic risk zone ranking of 4.

Potential Impacts and Mitigation Measures

The potential threat to structures from earthquakes will be minimized through recommendations of the study as well as compliance with requirements of the UBC, appropriate to the Zone 4 Seismic Probability Rating and other County, State, and Federal standards.

3.5.6 Wildfires

Existing Conditions

Approximately 70 to 80 wildfires occur annually in Hawaiʻi County. Droughts increase the vulnerability to wildfires. Fires of volcanic origin occurred in Hawaiʻi prior to human colonization and continue today; however, these fires are intermittent and geographically localized (USFS, 2008). Currently, wildfires in the Hawaiian Islands occur most commonly in lowland communities, with human activity as the primary cause. Between 2009 and 2013, 168 wildfires (fires occurring outside and/ or in association with natural vegetation/ brush) occurred within the South Kohala region (approximately 33 wildfires occur per year); (Tetra Tech, 2014),

Potential Impacts and Mitigation Measures

The Lālāmilo Well A Improvements are not anticipated to increase the Site's exposure to wildfires. The South Kohala Fire Station on Queen Kaʻahumanu Highway is the nearest station to the Site.

3.6 FLORA

Existing Conditions

No Federal or State listed threatened or endangered plant species are known to occur at the Site. Due to the historical use of the Site and adjacent lands for cattle grazing and military training areas, these dry grasslands are heavily disturbed.

The Lālāmilo Water System, inclusive of Well A, is on a corridor situated entirely on open scrub grasslands. Characteristics of such grasslands include level to rolling, dry annual grasslands with scattered trees and shrubs. Important herb layer plant species include feathery pennisetum (Pennisetum setaceum), *ilima* (Ilima spp.), waltheria (Waltheria americana), sixweeks threeawn (Aristida adscensionis); shrub layer species of *nehe* (Lipochaeta labrum var. labrum), *kiawe* (Prosopis pallida), and *koa haole* (Leucaena Leucocephala) and tree layer species of *kiawe* (DLNR, 1980).

A December 2013, biological reconnaissance survey was conducted for the Lālāmilo Wind Farm Project Area, adjacent to the Site. That survey concluded that no Federal or State listed or threatened species or other special status rate plants were observed during the Survey. Plant species observed during the 2013 survey included Fountain grass (Pennisetum setaceum) and buffelgrass (Cenchrus ciliaris) were the dominant species, both of which are non-native, aggressive, introduced grasses. Isolated or small groups of introduced *kiawe* (Prosopis pallida), klu (Acacia farnesiana), and *koa haole* (Leucaena leucocephala) were broadly distributed along the access road and gulches, and a mixture of introduced and native herbaceous and shrub species were widely scattered among the dominant grasses. A total of twenty-three plant species including four indigenous species were observed during the biological reconnaissance survey of the Project Area (Tetra Tech, Inc., 2014). The four indigenous species observed are: *ʻuhaloa* (Waltheria indica), *ʻilima* (Sida fallax), *ʻaʻaliʻi* (Dodonaea viscosa), and *koali awahia* (Ipomoea indica). Given the proximity of the Site to the Wind Farm Area, similar plant species are expected to occur on the Site and surrounding areas.

The Site was cleared and graded many years ago by DWS to construct the existing structures at the Site. As there have been prolonged drought conditions and the nature of the Site is heavily disturbed, there is a low likelihood of the presence of any listed species.

Potential Impacts and Mitigation Measures

No rare or endangered plant species are known to be present on the Site. Given the low diversity and presence of non-native vegetation in the vicinity of the Site the improvements are not expected to adversely impact the botanical resources.

3.7 FAUNA

Existing Conditions

No Federal or State listed endangered or threatened wildlife species are known to occur on the Site, as no designated or critical habitat occur on the Site. A 2013 biological reconnaissance survey conducted within the vicinity of the Site found that fauna within the Wind Farm Project Area is scarce and dominated by non-native species (Tetra Tech, 2014). A list of observed species from the 2013 biological reconnaissance survey is included below, as well as discussion of protected, endangered, and threatened species that may occur within the vicinity of the Site.

Table 1: Species Observed During 2013 Biological Reconnaissance Survey for Lālāmilo Wind Farm Project

Scientific Name	Species	Status
Birds		
Pterocles exustus	Chestnut-bellied sandgrouse	Introduced
Geopelia striata	Zebra dove	Introduced
Alauda arvensis*	Sky lark	Introduced
Carpodacus mexicanus*	House finch	Introduced
Lonchura cantans	African silverbill	Introduced
Mammals		
Bos taurus	Domestic cow	Domesticated
Invertebrates		
Pantala flavescens	Globe skimmer	Indigenous
Musca domestica	House Fly	Introduced

*Species protected by the Migratory Bird Treaty Act (MBTA)

3.7.1 Migratory Bird Treaty Act-Protected Species

Within the vicinity of the Site, the 2013 survey recorded two species protected by the MBTA and noted that additional species that were not observed, though may transit the surrounding area include the Hawaiian short-eared owl (Asio flammeus sandwichensis) and Pacific Golden-Plover (Pluvialis fulva). Due to a lack of food and favorable habitat for the MBTA species previously mentioned, it is most likely that these species may transit the area the surrounding area. Given the Site is less than an acre and previously disturbed, it is anticipated that MBTA species observed in the surrounding area may transit the Site.

3.7.2 Endangered Species Act-Listed Species

The following species were not observed during the 2013 survey, though potential presence within the vicinity of the Site is discussed below.

The endangered, Hawaiian hoary bat (Lasiurus cinereus semotus) is known to seasonally use the Wind Farm Project Area (Insight Enviornmental , 2013). Research notes that while a wide variety of introduced and native trees are used for roosting, trees typically are at least 15 feet tall with dense foliage (Tetra Tech, 2014) As the Site is cleared and lacks such trees, presence of the bat is likely to be limited to transiting between their foraging and roosting locations.

The endangered migratory seabird the Hawaiian petrel (Pterodroma sandwichensis) has known breeding areas at lava beds between Mauna Kea and Mauna Loa. This is the only known breeding area to result in Hawaiian petrels possibly transiting within the vicinity of the Site, while flying between breeding colonies and their ocean foraging grounds.

While the endangered Hawaiian goose (Branta sandvicensis) nest in beach strand, shrubland, grassland, and ancient lava flows its occurrence in the area is rare (Tetra Tech, 2014)Further, due to the lack of the food within the vicinity of the Site and existing fence enclosing the Site, it is not anticipated that the species will be present on the Site.

For the endangered Blackburn Sphinx Moth (Manduca blackburni) no larvae host plants or nectar plants are known to occur within the Site. While a single nectar plant was found on the Wind Farm Project Area, overall the presence of nectar plants is sparse, if occurring at all in the surrounding areas. As such, the species has a low likelihood of occurring within the Site.

Potential Impacts and Mitigation Measures

Site improvements are not expected to have a significant adverse impact on non-listed wildlife species that are unlikely to occur on the Site, given the dominance of non-native and invasive species within the vicinity. The disturbed nature of the Site and lack of favorable foraging, breeding, and nesting area result in low likelihood of sustained presence for any federal or State listed threatened, endangered, or candidate species within the vicinity of the Site. Given the proposed mitigation below, significant adverse impacts to species covered by the Migratory Bird Treaty Act (MBTA) are not anticipated.

The endangered Hawaiian Petrel and the threatened Newell's Shearwater are known to fly over the vicinity of the Site, during the months of April through November. Collision with man-made

structures is considered to be the second most significant cause of mortality for these nocturnally flying seabirds disoriented by exterior lighting. To avoid a situation where night lighting may disorient the seabirds, in the event that night construction work is required, lights will be shielded to reduce the potential for interactions of nocturnally flying Hawaiian Petrels, Newell's Shearwaters and seabirds protected under the federal MBTA. No permanent night lighting is proposed with this action.

[Page Intentionally Left Blank]

4 DESCRIPTION OF THE HUMAN ENVIRONMENT, POTENTIAL IMPACTS, AND MITIGATION MEASURES

This section describes the existing human environment, potential impacts of the proposed Lālāmilo Well A Improvements, and mitigation measures to minimize any impacts.

4.1 ARCHAEOLOGICAL AND HISTORIC RESOURCES

Existing Conditions

A 1978 archaeological reconnaissance survey conducted for the Lālāmilo Water System along the pipeline, inclusive of the Site and other *mauka* wells indicated that no archaeological sites are within the surveyed area (Archaeological Research Center Hawaii, Inc. , 1978). An area of 20,000 feet long and 30 to 50 feet wide was surveyed on foot by a crew of two. While a number of *ahu* (stone piles) were located within the surveyed area, the *ahu* were of modern construction lacking scatters of shells, midden, or other evidence of archaeological significance. The *mauka* 6,000 feet portion of the surveyed area until the end of the pipeline was previously bulldozed. The Site itself has been previously disturbed and graded given the existing Well A pump, pump control building, and two electrical transformers structures enclosed by a fence on the Site.

Archeological Findings

Potential Impacts and Mitigation Measures

The archaeological reconnaissance survey recorded that no archaeological sites were found within the surveyed area. As the area of the Site is less than one acre and will not require extensive ground disturbing activities, the improvements are not anticipated to adversely impact archaeological resources. Further, given the previously disturbed nature of the Site by bulldozer, 1980 grading associated with construction of existing structures on the Site, and improvements that occur on the existing Site, adverse the impacts are not expected.

DWS and its contractors will comply with all State and County laws and rules regarding the preservation of archaeological and historic sites. Should historic sites or remains of artifacts, burials, concentrations of shell or charcoal be inadvertently encountered during the construction activities, work will cease immediately in the immediate vicinity of the find and the find will be protected. The contractor shall immediately contact the State Historic Preservation Division (SHPD), which will assess the significance of the find and recommend appropriate mitigation

measures, if any. In addition, prior to the permit approval, DWS will be required to show compliance with Section 6E-42 and Section 13-284 HRS.

4.2 CULTURAL RESOURCES

Historic Background

Existing Conditions

The Site is situated within the District of South Kohala in the *ahupua'a* of Lālāmilo. The traditional Hawaiian settlement patterns of South Kohala estimate arrival during 750-1000 AD in areas both along the coast and in the uplands. Pre-contact trails connecting coastal and upland settlements helped facilitate the exchange of marine and agricultural resources and goods. The fertile soil and rainfall in the uplands of Lālāmilo provided sweet potato, irrigated *kalo*, *wauke*, *mamaki*, plantains, bananas, sugarcane, coconuts and *hala* (ASM Affiliates, Inc., 2014). The coastal sections of South Kohala included small bays with sand shores where fishermen resided.

By the 17th century, large areas of Hawaiʻi Island were controlled by a few powerful *ali'i 'ai moku* and King Kamehameha unified the Hawaiian islands in 1810. Agriculture continued to serve the subsistent needs in the region and with the introduction of cattle the late 18th century, the district was heavily influenced by the *paniolo* (Hawaiian cowboy) way of life. During World War II, nearly 123,000 acres of land that include the Project Area were leased by the U.S. War Department for the Waikoloa Maneuver Area (WMA) and Lālāmilo Firing Range (LFR). While the WMA was returned to Parker Ranch in 1946, the LFR continued as a U.S. Marines training area and camp site until 1953, when the lands were reverted to leased cattle pasture administered by the Territory of Hawaiʻi.

While ranching and agricultural uses were the enduring economic bases for the region, in the late 20th century, tourism would become the prevailing industry with the establishment of three world class resorts in South Kohala. Over the last several decades these resorts have shaped land use and development patterns in the region.

Potential Impacts and Mitigation Measures

The Site is not known to have been used for cultural purposes in recent history given the prolonged use as cattle pasture and as former military training area. As the Site is less than an acre on previously cleared lands, has been enclosed by fencing since 1980, and improvements will

occur on the existing Site, adverse impacts to cultural resources or cultural practices (such as gathering of plant materials) are not anticipated.

4.3 UNEXPLODED ORDINANCE

Existing Conditions

The Site is within the former Waikoloa Maneuver Area that was leased by the U.S. Navy from Parker Ranch in 1943. The WMA is comprised of 123,000 acres and portions were used for artillery firing range for live ammunition and other explosives with the remaining portions used for troop maneuvers. Department of Defense Formerly Used Defense Site (FUDS) funds were used to investigate unexploded ordinances (UXO) within the former WMA in 1946, 1954, 1993, 1997 to 1999, and 1999 to 2002 (USACE, 2014).

The first clean up or Removal Action (RA) of munitions and explosives of concern were conducted from 2002 to 2007 and second RA conducted in 2008 and 2009. The current RA started in 2010 continues today (Tetra Tech, 2014).

Potential Impacts and Mitigation Measures

According to the UXO survey data, no UXO were found on the Site. Given the disturbed nature of the Site (previously cleared for existing improvements) and that construction that will not likely require heavy ground disturbing activities, with the implementation of the below measures, the improvements and operation of Well A are not anticipated to have a significant adverse impact on UXO.

The operators of the Project will receive UXO safety training and briefs conducted by the U.S. Army Corps of Engineers. Personnel will be trained to recognize, retreat, and immediately report any UXO if encountered. Therefore impacts associated with UXO should be less than significant.

4.4 VISUAL RESOURCES

Existing Conditions

As the improvements will occur to the Site's existing above ground elements, including the well pump, piping, and appurtenances, and result in the construction of a new control building with 10 feet high walls with a pitched roof (4:12 pitch) and square footage ranging from 821 to 839

square feet, visual impacts from heavily traversed roadways (Queen Kaahumanu Highway and Kawaihae Road) will be minimal.

Potential Impacts and Mitigation Measures

Scenic views from Queen Ka'ahumanu Highway and Kawaihae Road are not expected to be significantly affected as the Lālāmilo Well A Improvements is 2.9 miles from the highway. Beyond the existing above ground elements, the new control building height and area are minimal. While above ground, these elements are far enough removed from the public roads and surrounded by varying terrain that the proposed project will not impact the views for the general public.

4.5 NOISE

Existing Conditions

The State of Hawaiʻi Community Noise Control Rule (HAR, Title 11 Department of Health, Chapter 46 Community Noise Control), enforced by the State DOH, identifies three classes of zoning districts and corresponding maximum permissible noise levels due to stationary noise (as measured from the property boundary). The A-weighted sound level metric measures sound in a similar fashion to how a person perceives or hears sound, thus achieving a good correlation in terms of how to evaluate acceptable and unacceptable sound levels (Tetra Tech, 2014). The TMKs located within 1.2 miles of the Project are zoned agricultural (HAR 11-46 Class C, 70 dBA). There are no sensitive receptors within this area. Typical sounds heard in this area include wind through vegetation and aircraft.

Potential Impacts and Mitigation Measures

Noise from the Lālāmilo Well A Improvements will be only temporary and far removed from any existing development as to not affect any residents in the region. Noise generated during construction would occur in association with the operation of equipment and construction vehicles for various activities, including construction of the new control building, upsizing of the existing well pump, piping, and appurtenances, as well as improvements to the access roads, security fence, and gate. Impacts would be short term and because the Project would be constructed primarily during daytime hours, and because of the rural location, are expected to be minimal. Additionally, the varying terrain surrounding the site, will likely serve to attenuate construction noise to minimal levels. If necessary, contractors will employ mitigation measures

to minimize those temporary noise impacts including the use of mufflers and implementing construction curfew periods. Pursuant to Chapter 11-46, HAR, all construction activities must comply with all community noise controls. The Maximum Permissible Sound Levels by in Zoning Class C is 70 dBA during daytime hours of 7:00 a.m.to 10:00 pm and nighttime hours of 10:00 p.m. to 7:00 a.m. (Tetra Tech, Inc., 2014).

4.6 AIR QUALITY

Existing Conditions

The existing air quality in the vicinity of the Project is generally very good year-round. The typical climatic pattern in Hawaiʻi with prevailing northeasterly winds can provide turbulence of the atmosphere to disperse human-caused and natural pollutants (B.D. Neal & Associates, 2002). Kīlauea volcano is the main source of air pollutants (vog – sulfur dioxide and particulate matter less than 2.5 micrometers in diameter) on the Island of Hawaiʻi (Longo, 2013). Air quality is monitored by a network of Special Purpose Monitoring stations around the island mainly focused on volcanic emissions. Federal and State ambient air quality standards are periodically exceeded at stations located near or downwind of Kīlauea volcano. Excluding when standards are exceeded due to the volcano, the State of Hawaiʻi typically meets the National Ambient Air Quality Standards (DOH, 2013).

Potential Impacts and Mitigation Measures

State and Federal air quality standards are not likely to be exceeded due to the construction of the Project. Short-term impacts that may result from the construction of the Lālāmilo Well A Improvements would be the emission of fugitive dust during site preparation and construction. Impacts will be minimized through proper maintenance of construction equipment and vehicles and, as necessary, through development and implementation of a dust control plan. Dust control measures may include watering loose soils, erecting dust screens, phasing land disturbing activities to minimize open soils, or establishing temporary ground cover. All construction activities will comply with the provisions of Section 11-60.1-33, HAR related to Fugitive Dust.

Long-term negative impacts related to air quality are not expected.

4.7 INFRASTRUCTURE

The Lālāmilo Well A Proposed Upsizing of Well Pump and Supporting Facilities Basis of Design Report was prepared to determine infrastructure requirements for the Project. The Report

includes the proposed building layout, a conceptual site plan, proposed line shaft pump, and hydropneumatic pressure Booster System. The plans and specifications will be in accordance with County of Hawaiʻi, Department of Water Supply System Standards 2002, as amended. Findings and recommendations of the report are summarized below. Appendix B contains the complete report with conceptual site plans

4.7.1 Roadways and Access

Existing Conditions

Access to the Site is provided from existing Lālāmilo-Parker Access Road via Queen Ka'ahumanu Highway (Figure 3: Aerial Photograph). The Site is located 2.9 miles east of the Queen Ka'ahumanu Highway to Site.

Potential Impacts and Mitigation Measures

Traffic impacts to the Queen Ka'ahumanu Highway and Lālāmilo-Parker Access Road are not expected to be significantly affected by the improvements. During the pre-consultation process, the State of Hawai'i Department of Transportation (DOT) confirmed that "The subject project is not expected to significantly impact the State highway facility." Traffic impacts are expected to be restricted to the construction phase of the project. Should transport of oversized and/or overweight materials and equipment on State highway facilities be required, a permit from DOT Highways Division, Hawaiʻi District Office will be acquired.

4.7.2 Water System

Existing Conditions

The DWS is responsible for the management, control, and operation of the Lālāmilo Water System. Sources of water from the System include Lālāmilo Wells, A, B, C, and D, as well as Parker Well Nos. 1, 2, 3, and 4 that are groundwater sources. The System was built to service Kawaihae and later expanded following development of resort areas in South Kohala including Puakō, and the Mauna Kea and Mauna Lani Resorts.

Potential Impacts and Mitigation Measures

This Project will result in proposed improvements to the existing Lālāmilo Well A. These improvements support the ability of DWS to service the current and future demands of its

service area that includes neighborhood communities, businesses, and the South Kohala resorts. The improvements contribute to enhanced operations of the Lālāmilo Well A Site.

4.7.3 Wastewater System

Existing Conditions

There is no County wastewater system in the vicinity of the Site. The Department of Water Supply employees currently utilize "port-a-potties" that are serviced on an average, weekly basis.

Potential Impacts and Mitigation Measures

During construction, "port-a-potties" would be dispersed within the Project Area to handle wastewater. An Americans with Disabilities Act (ADA) compliant restroom is a design alternative of the new control building that would address long-term facility needs, though is not anticipated to have a significant effect on the wastewater system. Should the restroom alternative be selected, any environmental impacts would be addressed through compliance with plumbing design will be in accordance with the Uniform Plumbing Code, 2006 and Hawai'i County Plumbing Code, as amended.

4.5.4 Drainage System

Existing Conditions

The Site and surrounding area do not have a master drainage system in place. The existing DWS Lālāmilo Water System facilities have a negligible effect on stormwater impacts.

Potential Impacts and Mitigation Measures

During construction, best management practices (BMPs) will be implemented to minimize and control stormwater runoff. Construction BMPs may include providing gravel entrances, installing silt fencing, diverting stormwater runoff to retention/detention basins, utilizing diversion berms and ditches, installing dust screens, establishing temporary groundcover, and watering loose soils. If an NPDES permit is required, specific construction BMPs will be specified in the project's NPDES permit.

4.7.4 Solid Waste Disposal

Existing Conditions

The County of Hawaiʻi Solid Waste Division does not provide solid waste or recyclables collection services. Private companies haul away solid waste that is generated in some residential and commercial areas to County landfills. In other areas, solid waste and recyclables are self-hauled directly to recycling stations, transfer stations or the landfill. The County operates and maintains all solid waste collection and transfer stations on the island. The Solid Waste Division manages two landfills, one that services East Hawaiʻi and the other that services West Hawaiʻi, and 21 transfer stations.

Currently, the DWS employees that utilize the Project Area pack in and pack out their solid wastes and recyclables.

Potential Impacts and Mitigation Measures

Solid waste generated during construction would be disposed of in accordance with State and County regulations. Waste that would be generated during construction would primarily consist of soils and rocks displaced during grading and clearing. To the extent possible, this displaced cut would be utilized as fill material and the remainder will be spread on-site.

4.7.5 Electrical and Communication Systems

Existing Conditions

The DWS Lālāmilo-Parker well pumps use approximately 10,000 megawatts (MW) hours of electricity annually at an annual cost of $3 Million to $4 Million. Currently, all electrical needs to power the Lālāmilo-Parker wells are provided by the Hawaiian Electric Light Company (HELCO) via a 13-kV overhead transmission line and interconnect located at the proposed Lālāmilo Wind Farm (Tetra Tech, Inc., 2014). Electrical service to the new pump station will comprise of two sources: HELCO and wind power, though only one source will provide power to the station at any given time.

There is currently no telecommunication infrastructure within or immediately adjacent to the Site. Communications for the water system are handled by the existing supervisory control and data acquisition (SCADA) system and a radio transceiver/ repeater system that would be updated

and expanded to manage the water system, maximizing the usage of energy generated by the Lālāmilo Wind Farm.

Potential Impacts and Mitigation Measures

The improvements will support the use of renewable wind generated electricity that would offset the fossil fuel generated energy provided by HELCO that powers the well pumps. In collaboration with HELCO, the Lālāmilo Wind Farm has been planned and developed to meet the electrical needs of DWS necessary to ensure reliable drinking water to their customers. It is estimated that the reduced cost of energy produced by the Lālāmilo Wind Farm will result in savings to DWS customers of approximately $1 million dollars per year, at today's rates. (Tetra Tech, Inc., 2014) Necessary design and requirements will occur to ensure the Project does not adversely impact HELCO's generation or transmission system.

Communications infrastructure would not be adversely affected by the improvements because a new dedicated communications system would be installed and maintained as part of the Lālāmilo Wind Farm project in the vicinity of the Site. The Lālāmilo Wind Farm is pursuing upgrades to the SCADA system necessary to efficiently manage the water system's energy needs and the Lālāmilo Wind Farms generation output.

Potential Impacts and Mitigation Measures

Given the close coordination and collaboration with HELCO, no significant electrical and communication impacts would result so mitigation is not required.

4.8 SOCIO-ECONOMIC CHARACTERISTICS

4.8.1 Population

Existing Conditions

In 2010, the County of Hawai'i (COH) had a population of 185,079 and South Kohala was the fourth most populated district with a population of 17,627 (COH Data Book 2012). South Kohala Census County Division (CCD) is one the fastest growing areas on the island; the population of the district increased from 1,538 persons in 1960 to 13,079 in 2000. The population of South Kohala District in 2010 was 17,627 persons (COH Data Book 2010), representing more than a 34 percent increase since 2000. The median house price in South Kohala in 2006 was $549,950 up 144 percent from $225,000 in 2001 (COH 2008).

In 2012, the civilian work force for COH was 83,400 with 9,150 persons for the South Kohala district. In the same year, unemployment for the County was 8.3 percent and only 2.2 to 2.4 percent for the overall district (SMS Research & Marketing Services, Inc., 2010).

The economic characteristics of the South Kohala District are shaped by the Mauna Kea Resort that began operations in 1965 and ushered resort development in the area. Hunting on the Mauna Kea and Kohala Mountain slopes, deep sea fishing, golf, hiking trails, historic sites, and beaches are some of the attractions available to tourists (COH, 2005). In 2008, the three resorts in the district, the Mauna Kea Resort, Mauna Lani Resort, and Waikōloa Beach Resort accounted for 40 percent of all hotel rooms in the COH. South Kohala hotels are some of the COH's largest employers, accounting for 3,378 jobs and employing residents from all over the County. While tourism is the leading economic industry in the district, cattle ranching, agriculture, and astronomy are also well established in the district (COH, 2008)

According to the State of Hawaiʻi Data Book, the Hawaiʻi County population was 177,835 in 2009, a 19.6 percent increase from 2000. Forecasts prepared by the State Department of Business, Economic Development and Tourism (DBEDT) project that the resident population for Hawaiʻi County is anticipated to increase at an annual rate of 0.4 percent, from 220,900 persons in 2020 and 296,300 persons by 2040.

Table 2: Demographic Characteristics: 2010

Subject	South Kohala CCD*		Hawai'i County	
	Number	Percent	Number	Percent
Total Population	17,627	100.00	185,079	100.00
AGE				
Under 5	1,192	6.8	11,845	6.4
5-19	3,716	21.0	35,088	18.9
20 – 64 years	10,664	60.5	111,312	60.1
65 years and over	2,055	11.7	26,834	14.6
Median Age (years)	38.8		40.9	

HOUSEHOLD (By type)				
Total Households	2,402	100.0	67,096	100.0
Family Households (families)	1,724	71.8	44,407	66.2
With own children under 18 years	831	34.6	17,296	25.8
Married-couple family	1,389	57.8	31,834	47.4
With own children under 18 years	622	25.9	11,141	16.6
Female householder, no husband present	234	9.7	8,258	12.3
With own children under 18 years	143	6.0	4,054	6.0
Non-families	678	28.2	22,689	33.8
Living alone	467	19.4	16,843	25.1
65 years and over	88	3.7	5,887	8.8
Average persons per household	2.83		2.70	
HOUSING OCCUPANCY AND TENURE				
Total Housing Units	9,494	100.0	82,324	100.0
Occupied units	6,335	66.7	67,096	81.5
By owner	4,150	43.7	44,271	66.0
By renter	2,185	23.0	22,825	34.0
Vacant units	3,159	33.3	15,228	18.5

Source: U.S. Census Bureau, Census 2010.

**CCD (Census County Division)*

Potential Impacts and Mitigation Measures

The Lālāmilo Well A Improvements will not generate new residents or visitors to South Kohala or the County, and will not have a significant adverse effect on the area population and will not create additional strain on other area State and County facilities. Given the utilization of power

generated from renewable wind energy source, the proposed improvements will result in positive benefits to the South Kohala District's residents and visitors (and businesses) through the provision of reliable drinking water.

4.8.2 Economy

Existing Conditions

The local economy is dependent on the arts, entertainment, recreation, accommodations and food services industry, with approximately 2,145 persons or 25.5 percent employed in these industries in the CCD in 2013. That same year 1,325 persons or 15.8 percent were employed in professional, scientific, management, administrative and waste management services and 1,260 persons or 15.0 percent were in educational, health care and social services. Other prevalent industries, with approximately 28.2 percent of the working population employed by field include: construction; retail; transportation, warehousing, and utilities; as well as agriculture.

The South Kohala CCD has a lower number of families and individuals facing poverty, when compared to County of Hawai'i. Data for 2013, recorded 9.6 percent of families and 6.2 percent of individuals in South Kohala CCD were facing poverty, compared to 13.7 percent of families and 18.1 percent of individuals for the overall County of Hawai'i.

4.8.3 Employment

Existing Conditions

As of 2015, Hawai'i County's unemployment rate was 5.0 percent, compared 6.0 percent in 2014 (COH, 2015). In 2013, for the South Kohala CCD approximately 9,346 persons or 62.2 percent were listed as employed as part of the civilian workforce. Approximately 2,984 persons or 35.5 percent of the population was employed in management, business, science, and arts occupations, followed by 2,040 individuals or 24.3 percent in sales and office occupations, as well as 966 persons or 11.5 percent in agriculture, forestry, fishing, hunting and mining occupations. The remaining 28.7 percent were employed in the service, as well as production, transportation, construction, and maintenance occupations.

Potential Impacts and Mitigation Measures

The Lālāmilo Well A improvements are likely to have a positive impact on the economy and employment for South Kohala. Construction and improvements will provide economic benefits in the form of construction jobs, construction spending, and multiplier effects on the local

economy. Additionally, the proposed improvements will result in positive benefits to the South Kohala District's businesses through the provision of more reliable drinking water.

4.9 PUBLIC SERVICES AND FACILITIES

4.9.1 Schools

Existing Conditions

Presently, the State of Hawai'i Department of Education operates nineteen (19) public schools and four (4) charter schools in the Honoka'a-Kealakehe-Kohala-Konawaena Complex Area. The Honoka'a Complex includes Honoka'a Elementary, Honoka'a High School & Intermediate, Pa'auilo Elementary and Intermediate, and Waimea Elementary School. The Kealakehe Complex consists of Kealakehe High, Kealakehe Intermediate, Kealakehe Elementary, Kahakai Elementary, Hōlualoa Elementary, and Waikoloa Elementary & Middle School. There are three (3) public schools in the Kohala Complex, including Kohala Elementary, Kohala Middle, and Kohala High School. The Konawaena Complex has six (6) schools including Honaunau Elementary, Ho'okena Elementary, Ke Kula o Ehunuikaimalino, Konawaena Elementary, Konawaena Middle, and Konawaena High. Table 3contains current and projected school enrollment information (State of Hawai'i DOE, 2015).

Table 3: Capacity and Enrollment for Public Schools

SCHOOL	Official Enrollment School Year 2014-2015
Honoka'a Elementary (Grades PreK-6)	339
Honoka'a High School & Intermediate (Grades 6-12)	671
Pa'auilo Elementary & Intermediate (Grades K-9)	228
Waimea Elementary School (Grades PreK-5)	525
Kealakehe High School (Grades 9-12)	1,299
Kealakehe Intermediate School (Grades 6-8)	709
Kealakehe Elementary School (Grades PreK-5)	1,003
Kahakai Elementary School (Grades PreK-5)	691
Hōlualoa Elementary School (Grades PreK-5)	479
Waikoloa Elementary and Middle School (Grades PreK-8)	784
Kohala Elementary (Grades PreK-5)	350
Kohala Middle (Grades 6-8)	181
Kohala High School (Grades 9-12)	265
Honaunau Elementary (Grades PreK-5)	137
Ho'okena Elementary (Grades PreK-5)	132
Ke Kula o Ehunuikaimalino (Grades K-12)	222
Konawaena Elementary (Grades PreK-5)	548
Konawaena Middle (Grades 6-8)	549
Konawaena High (Grades 9-12)	730

There are also four (4) public charter schools in the region: Innovations Public Charter School (PCS) (grades K-8) located on Queen Ka'ahumanu Highway in Kailua-Kona, Kanu o ka 'Āina New Century Public Charter School (grades K-12), which operates out of the Lālāmilo Experiment Station in Waimea and West Hawai'i Explorations Academy Public Charter School (grades 6-12) located on Kahilihili Street falls within the Kealakehe Complex, while Waimea Middle Public Conversion Charter School (grades 6-8) on Mamalahoa Highway is within the Honoka'a Complex.

Potential Impacts and Mitigation Measures

The Lālāmilo Well A improvements will not impact student enrollment at public or charter schools. As such, no mitigation measures are warranted or planned. The proposed improvements support meeting the water demand of DWS service area which includes some of the previously mentioned schools.

4.9.2 Police, Fire and Medical Services

Existing Conditions

Police service for the South Kohala District, where the Site is located, is provided by the COH Police Department's Area II Operations Bureau that is headquartered in Waimea (Hawai'i Police Department, 2014). Other nearby Police Stations are at Kapaʻau in North Kohala and Kealakehe near in Kailua-Kona.

The South Kohala Fire Station on Queen Kaʻahumanu Highway serves the Kawaihae-South Kohala coastal area. The station is equipped with a fire engine, tanker truck, and medic unit, chopper, and fuel truck (Tetra Tech, Inc., 2014). It is staffed by a 24-hour crew of five to six firefighters. Other stations in the region include the Waimea station, which has a full crew on duty 24-hours a day, and the Waikoloa Village Fire and Emergency Medical Interim Facility, which provides fire protection and basic life support emergency aid. Although the Waimea station is located the farthest, it can respond to calls along the Kohala coast in about 20 to 25 minutes. Additional engines can be dispatched from North Kohala, if needed (Belt Collins Hawai'i, 2001).

The health care facility nearest the Site is Kona Community Hospital, located on Haukapila Street in Kealakekua. The 94-bed facility provides full-service acute and long-term care, with a staff of 100 medical staff practitioners and over 400 employees services (Kona Community

Hospital, 2015). In 2010, the Kona Community Hospital was the first hospital on Hawaiʻi island to begin the Level III Trauma Center designation process. Other private medical and dental service providers, which have regular business hours, are located in the Kona region, including a Kaiser Permanente Clinic and Straub Clinic and Hospital.

Potential Impacts and Mitigation Measures

During the pre-consultation process, the County of Hawaiʻi Fire Department and Police Department did not identify any concerns with the proposed project. While there may be an occasional and unavoidable demand for police (vandalism) and fire (wildfires) services, the Lālāmilo Well A Improvements are not expected to create an increased demand on existing fire or medical services. As such, no mitigation is warranted or planned.

4.9.3 Recreational Facilities

Existing Conditions

There are several parks and recreation facilities located in close proximity to the Site. Recreation facilities in South Kohala include golf courses, beaches, riding stables, historic sites, and small boat harbors. Hāpuna Beach State Recreation Area is a large State Park with a sandy beach to the west of the Site. It has paved parking, pavilions, picnic areas, restrooms with showers, and allows camping with a permit. Puʻukoholā Heiau National Historic Site is a nearby federally managed location with an interpretive trail beginning at a visitor's center where visitors can learn more about the history of the Hawaiian temple built in the late 1700s by King Kamehameha I.

Potential Impacts and Mitigation Measures

The improvements to the Site are removed from these recreational facilities and are not anticipated to result in significant adverse impacts to regional recreational facilities. As such, no mitigation is warranted or planned.

5 CONTEXTUAL ISSUES

This section summarizes the cumulative, secondary, and unavoidable impacts of the Lālāmilo Well A Improvements in context with other development in the area.

5.1 CUMULATIVE IMPACTS

As the proposed improvements are focused on existing structures on the Site, negligible impacts will occur to the surrounding properties and uses.

The Lālāmilo Well A Improvements are planned to utilize wind energy from the nearby Lālāmilo Wind Farm that is being developed and is a separate action. For the Wind Farm project, unavoidable adverse impacts are confined to short-term construction impacts (localized noise and air quality impacts). However, the long-term impacts of the Wind Farm project are beneficial, resulting in positive impacts through the reduction of greenhouse gases and reduction of energy costs for DWS water customers. A positive cumulative impact will result from the development of the Wind Farm and Lālāmilo Well A Improvements that enable DWS to provide water service that reduces its environmental impact on the environment and operational energy costs to its customers

5.2 SECONDARY IMPACTS

The Lālāmilo Well A Improvements are not expected to present significant adverse secondary impacts. The improvements result in positive impacts including enhancing the ability of DWS to ensure a reliable source of water to meet future demands of the Lālāmilo Water System, positively effecting residential, commercial, public, and resort customers. Once the improvements to the Lālāmilo Well A are coupled with the utilization of electricity generated by the Lālāmilo Wind Farm, significant and positive secondary impacts include cost savings realized by DWS customers and advancing the sustainability and renewable energy goals and policies of the State of Hawai'i and County of Hawai'i.

5.3 IRREVERSIBLE AND IRRETRIEVABLE COMMITMENT OF RESOURCES

The development of the Lālāmilo Well A Improvements will involve the commitment of certain land and fiscal resources. Major resource commitments include the land and capital, construction materials, non-renewable resources, labor, and energy required for the improvements. The impacts represented by the commitment of resources should be weighed

against the significant positive and recurring benefits that will be derived from Lālāmilo Well A Improvements versus the consequences of either taking no action or pursuing another less beneficial use of the Site.

5.4 PROBABLE IMPACTS THAT CANNOT BE AVOIDED

Potential environmental impacts resulting from the Lālāmilo Well A Improvements have been discussed throughout this EA, and mitigation measures have been provided for adverse impacts. The potential unavoidable adverse impacts, while minimal, can be mitigated as follows:

- Possible short-term construction impacts to air quality, noise, solid waste generation, storm water quality/quantity are anticipated. DWS will address these possible impacts through compliance with County, State, and Federal rules, regulations, permits, regarding fugitive dust, community noise control, solid waste collection and non-point source discharges.
- Long-term potential impacts to storm water quality/quantity are not anticipated given the nominal impervious surface resulting from the improvements.

6 LAND USE CONFORMANCE, POLICIES, AND CONTROLS

The processing of various permits and approvals are prerequisites to the creation of the project. Relevant State of Hawaiʻi and Hawai'i County's land use plans, policies, and ordinances are described below.

6.1 STATE OF HAWAIʻI

6.1.1 State Environmental Review Law (Chapter 343, Hawaiʻi Revised Statutes)

The State Environmental Review Law (Chapter 343, Hawaiʻi Revised Statutes (HRS)) (State of Hawaiʻi, 2001) requires an environmental assessment for any action that proposes the use of State or County lands and funds. This Environmental Assessment has been prepared in compliance with Chapter 343, HRS as described in Section 1.5.

6.1.2 State Land Use Law (Chapter 205, Hawaiʻi Revised Statutes)

The State Land Use Law (Chapter 205, HRS) establishes the State Land Use Commission and authorizes this body to designate all lands in the State into one of four districts: Urban, Rural, Agricultural, or Conservation.

The Site is located within the State Land Use Agricultural District, (Figure 4: State Land Use District). The Lālāmilo Well A Improvements are a permissible use prescribed in Chapter 15, Land Use Commission Rules, Subchapter 3 Permissible Land Uses within the "A" agricultural district (HAR, 15-15-25).

6.1.3 Hawaiʻi Coastal Zone Management Program (Chapter 205A, Hawaiʻi Revised Statutes)

The National Coastal Zone Management (CZM) Program was created through passage of the Coastal Zone Management Act of 1972. Hawaiʻi's CZM Program, adopted as Chapter 205A, HRS, provides a basis for protecting, restoring, and responsibly developing coastal communities and resources. The objectives and policies of the CZM Program encompass broad concerns such as impact on recreational resources, historic and archaeological resources, coastal scenic resources and open space, coastal ecosystems, coastal hazards, and the management of development. Each of the Counties have adopted Special Management Areas (SMAs) in which a development's consistency with the objectives and policies of the CZM program are evaluated

through the SMA permitting process. The Site is located outside of Hawai'i County's designated SMA (Figure 7: Special Management Area).

Recreational Resources

Objective: *Provide coastal recreational opportunities accessible to the public.*

Policies

(A) Improve coordination and funding of coastal recreational planning and management; and

(B) Provide adequate, accessible, and diverse recreational opportunities in the coastal zone management area by:

(i) Protecting coastal resources uniquely suited for recreational activities that cannot be provided in other areas;

(ii) Requiring replacement of coastal resources having significant recreational value including, but not limited to surfing sites, fishponds, and sand beaches, when such resources will be unavoidably damaged by development; or requiring reasonable monetary compensation to the State for recreation when replacement is not feasible or desirable;

(iii) Providing and managing adequate public access, consistent with conservation of natural resources, to and along shorelines with recreational value;

(iv) Providing an adequate supply of shoreline parks and other recreational facilities suitable for public recreation;

(v) Ensuring public recreational uses of county, state, and federally owned or controlled shoreline lands and waters having recreational value consistent with public safety standards and conservation of natural resources;

(vi) Adopting water quality standards and regulating point and nonpoint sources of pollution to protect, and where feasible, restore the recreational value of coastal waters;

(vii) Developing new shoreline recreational opportunities, where appropriate, such as artificial lagoons, artificial beaches, and artificial reefs for surfing and fishing; and

(viii) Encouraging reasonable dedication of shoreline areas with recreational value for public use as part of discretionary approvals or permits by the land use commission, board of land and natural resources, and county authorities; and crediting such dedication against the requirements of section 46-6;

Discussion: The Lālāmilo Well A Improvements are not anticipated to generate additional demands on existing public parks and beach areas. To protect water resources for purposes including recreation, the State of Hawaiʻi has adopted water quality standards. Generally, these standards will require the submittal and adherence to a National Pollution Discharge Elimination System (NPDES) permit. This permit requires compliance with best management practices (BMPs) during construction to minimize soil erosion into adjacent waterways. The NPDES permit will also include requirements to maintain water quality during operation. While the project area is expected to be less than an acre, a NPDES permit may be required for the Lālāmilo Well A Improvements.

Historic Resources

Objective: *Protect, preserve, and, where desirable, restore those natural and manmade historic and prehistoric resources in the coastal zone management area that are significant in Hawaiian and American history and culture.*

Policies

(A) Identify and analyze significant archaeological resources;

(B) Maximize information retention through preservation of remains and artifacts or salvage operations; and

(C) Support state goals for protection, restoration, interpretation, and display of historic resources;

Discussion: The proposed Lālāmilo Well A Improvements is not expected to adversely affect historic resources. No archaeological or historic resources were found during the course of the 1980 archaeological reconnaissance survey. Further, as the site has been heavily disturbed by previous use as a cattle pasture and military training area (and current use as a DWS facility), no adverse impacts are anticipated.

Scenic and Open Space Resources

Objective: *Protect, preserve, and, where desirable, restore or improve the quality of coastal scenic and open space resources.*

Policies

(A) Identify valued scenic resources in the coastal zone management area;

(B) Ensure that new developments are compatible with their visual environment by designing and locating such developments to minimize the alteration of natural landforms and existing public views to and along the shoreline;

(C) Preserve, maintain, and, where desirable, improve and restore shoreline open space and scenic resources; and

(D) Encourage those developments that are not coastal dependent to locate in inland areas;

Discussion: Lālāmilo Well A Improvements will not impinge upon any significant public scenic view corridors from major public roadways and will have no significant impact on views toward the ocean. This is due to the rural nature of the site that is removed from residential areas and main highways in the area.

Coastal Ecosystems

Objective: *Protect valuable coastal ecosystems, including reefs, from disruption and minimize adverse impacts on all coastal ecosystems.*

Policies

(A) Exercise an overall conservation ethic, and practice stewardship in the protection, use, and development of marine and coastal resources;

(B) Improve the technical basis for natural resource management;

(C) Preserve valuable coastal ecosystems, including reefs, of significant biological or economic importance;

(D) Minimize disruption or degradation of coastal water ecosystems by effective regulation of stream diversions, channelization, and similar land and water uses, recognizing competing water needs; and

(E) Promote water quantity and quality planning and management practices that reflect the tolerance of fresh water and marine ecosystems and maintain and enhance water quality through the development and implementation of point and nonpoint source water pollution control measures.

Discussion: While the Site is not on the shoreline and at an elevation of 1,200 feet above mean sea level (AMSL), appropriate best management practices (BMPs) and erosion control measures

will be implemented to ensure that coastal ecosystems are not adversely impacted by construction activities.

Economic Uses

Objective: *Provide public or private facilities and improvements important to the State's economy in suitable locations.*

Policies

(A) Concentrate coastal dependent development in appropriate areas;

(B) Ensure that coastal dependent development such as harbors and ports, and coastal related development such as visitor industry facilities and energy generating facilities, are located, designed, and constructed to minimize adverse social, visual, and environmental impacts in the coastal zone management area; and

(C) Direct the location and expansion of coastal dependent developments to areas presently designated and used for such developments and permit reasonable long-term growth at such areas, and permit coastal dependent development outside of presently designated areas when:

(i) Use of presently designated locations is not feasible;

(ii) Adverse environmental effects are minimized; and

(iii)The development is important to the State's economy.

Discussion: The Lālāmilo Well A Improvements is not a coastal dependent development. However, the proposed project enhances greater reliability of water service to DWS customers located in business, commercial, resort, and residential areas, and is in alignment with CZM objective and policies for economic uses.

Coastal Hazards

Objective: *Reduce hazard to life and property from tsunami, storm waves, stream flooding, erosion, subsidence, and pollution.*

Policies

(A) Develop and communicate adequate information about storm wave, tsunami, flood, erosion, subsidence, and point and non-point source pollution hazards;

(B) Control development in areas subject to storm wave, tsunami, flood, erosion, hurricane, wind, subsidence, and point and non-point source pollution hazards;

(C) Ensure that developments comply with requirements of the Federal Flood Insurance Program; and

(D) Prevent coastal flooding from inland projects.

Discussion: The Lālāmilo Well A Improvements are not anticipated to increase the Site's exposure to flooding. The Site is located in located in Zone X (flood fringe area), an area determined to be located outside of the flood plain. Further the Site is located outside of the designated tsunami evacuation zone and is not expected to be adversely impacted by a tsunami if one should occur.

Managing Development

Objective: *Improve the development review process, communication, and public participation in the management of coastal resources and hazards.*

Policies

(A) Use, implement, and enforce existing law effectively to the maximum extent possible in managing present and future coastal zone development;

(B) Facilitate timely processing of applications for development permits and resolve overlapping or conflicting permit requirements; and

(C) Communicate the potential short and long-term impacts of proposed significant coastal developments early in their life cycle and in terms understandable to the public to facilitate public participation in the planning and review process.

Discussion: The purpose of this EA is to communicate the potential short and long-term impacts of the proposed improvements to the Lālāmilo Well A at an early stage in the development process. After it is published, the Draft EA will have been made available to agencies and stakeholders for a formal 30-day public review period.

Public Participation

Objective: *Stimulate public awareness, education, and participation in coastal management.*

Policies

(A) Promote public involvement in coastal zone management processes;

(B) Disseminate information on coastal management issues by means of educational materials, published reports, staff contact, and public workshops for persons and organizations concerned with coastal issues, developments, and government activities; and

(C) Organize workshops, policy dialogues, and site- specific mediations to respond to coastal issues and conflicts.

Discussion: This EA serves as a disclosure document of potential impacts and mitigation measures, including coastal management issues. All EAs are published in the State Office of Environmental Quality Control's Environmental Notice, whereby opportunity for comment by agencies and the public are provided.

Pre-consultation comments for this EA were obtained and are reproduced in Appendix A.

Beach Protection

Objective: *Protect beaches for public use and recreation.*

(A) Locate new structures inland from the shoreline setback to conserve open space, minimize interference with natural shoreline processes, and minimize loss of improvements due to erosion;

(B) Prohibit construction of private erosion-protection structures seaward of the shoreline, except when they result in improved aesthetic and engineering solutions to erosion at the sites and do not interfere with existing recreational and waterline activities; and

(C) Minimize the construction of public erosion-protection structures seaward of the shoreline.

Discussion: The Lālāmilo Well A Improvements is located over three miles from the closest beach, and is not expected to have any impact on any beaches.

Beach Resources

Objective: *Promote the protection, use, and development of marine and coastal resources to assure their sustainability.*

<u>Policies</u>

(A) Ensure that the use and development of marine and coastal resources are ecologically and environmentally sound and economically beneficial;

(B) Coordinate the management of marine and coastal resources and activities to improve effectiveness and efficiency;

(C) Assert and articulate the interests of the State as a partner with Federal agencies in the sound management of ocean resources within the United States exclusive economic zone;

(D) Promote research, study, and understanding of ocean processes, marine life, and other ocean resources in order to acquire and inventory information necessary to understand how ocean development activities relate to and impact upon ocean and coastal resources; and

(E) Encourage research and development of new, innovative technologies for exploring, using, or protecting marine and coastal resources.

Discussion: The Site is located away from the shoreline, such that adverse impacts on beach processes are not expected. Appropriate BMPs and erosion control measures will be implemented to ensure that coastal ecosystems are not adversely impacted by construction activities.

Marine Resources

Objective: *Promote the protection, use, and development of marine and coastal resources to assure their sustainability.*

Policies

(A) Ensure that the use and development of marine and coastal resources are ecologically and environmentally sound and economically beneficial;

(B) Coordinate the management of marine and coastal resources and activities to improve effectiveness and efficiency;

(C) Assert and articulate the interests of the State as a partner with Federal agencies in the sound management of ocean resources within the United States exclusive economic zone;

(D) Promote research, study, and understanding of ocean processes, marine life, and other ocean resources in order to acquire and inventory information necessary to understand how ocean development activities relate to and impact upon ocean and coastal resources; and

(E) Encourage research and development of new, innovative technologies for exploring, using, or protecting marine and coastal resources.

Discussion: The Lālāmilo Well A Improvements will not have a significant adverse impact on marine or coastal resources, especially as the Site is removed from the shoreline and at an elevation of 1,200 feet AMSL. Appropriate BMPs and erosion control measures will be implemented to ensure that marine and coastal resources are not adversely impacted by construction activities.

6.1.4 Hawai'i State Plan, Chapter 226, Hawai'i Revised Statutes

The Hawai'i State Plan (Chapter 226, HRS), establishes a set of goals, objectives and policies that serve as long-range guidelines for the growth and development of the State. Objectives and policies pertinent to the Lālāmilo Well A Improvements are as follows:

HRS § 226-5: Objectives and policies for the economy in general.

§226-5*(7) Plan the development and availability of land and water resources in a coordinated manner so as to provide for the desired levels of growth in each geographic area.*

Discussion: The Lālāmilo Well A Improvements enable DWS to meet current and future water demands. These proactive effort supports water resources being made available in a coordinated manner that anticipates future growth.

HRS §226-13: Objectives and policies for the physical environment--land, air, and water quality.

§226-13*(2): Promote the proper management of Hawai'i's land and water resources.*

§226-13*(3): Promote effective measures to achieve desired quality in Hawai'i's surface, ground, and coastal waters.*

HRS *§226-14: Objective and policies for facility systems--in general.*

§226-14(3): Ensure that required facility systems can be supported within resource capacities and at reasonable cost to the user.

§226-14*(4): Pursue alternative methods of financing programs and projects and cost-saving techniques in the planning, construction, and maintenance of facility systems.*

HRS §226-16 Objective and policies for facility systems--water.

§226-16*(1): Coordinate development of land use activities with existing and potential water supply.*

§226-16*(4): Assist in improving the quality, efficiency, service, and storage capabilities of water systems for domestic and agricultural use.*

Discussion: The Lālāmilo Well A Improvements support measures that ensure reliable and quality water being made available to residential communities, businesses, and resorts in South Kohala. The utilization of wind power for operation of the Well A, promotes use of renewable energy and reduced reliance on fossil fuels resulting in positive environmental impacts. Further, these improvements contribute to enhanced energy and economic efficiencies realized by DWS that benefits the environment and reduces cost of service to DWS customers.

H RS 226-18: Objectives and policies for facility systems – energy.

§226-18(1): Dependable, efficient, and economical statewide energy systems capable of supporting the needs of the people;

§226-18(2): Increase energy self-sufficiency where the ratio of indigenous to imported energy use is increased;

§226-18(3): Greater energy security and diversification in the face of threats to Hawai'i's energy supplies and systems; and

§226-18(4): Reduction, avoidance, or sequestration of greenhouse gas emissions from energy supply and use.

HRS § 226-108: Priority guidelines and principles to promote sustainability.

§226-108(1): *Encouraging balanced economic, social, community, and environmental priorities;*

§226-108(2): *Encouraging planning that respects and promotes living within the natural resources and limits of the State;*

§226-108(3): *Promoting a diversified and dynamic economy;*

§226-108(4) Encouraging respect for the host culture;

§226-108(5) Promoting decisions based on meeting the needs of the present without compromising the needs of future generations;

Discussion: The proposed use of wind generated power from the neighboring Lālāmilo Wind Farm for as the operation of Well A will result in decreased energy consumption from fossil fuels. The utilization of wind sourced power provides alternative energy source to fossil fuel has a positive environmental impact and results in cost savings for DWS customers.

6.2 COUNTY OF HAWAIʻI

County-specific land use plans and ordinances pertaining to the Lālāmilo Well A Improvements include the General Plan of the County of Hawaiʻi, the South Kohala Community Development Plan, and the Hawaiʻi County Code.

6.2.1 County of Hawaiʻi General Plan

The County of Hawaiʻi General Plan is the policy document for the long-range comprehensive development of the island of Hawaiʻi. Among the purposes of the General Plan are to guide the pattern of development in Hawaiʻi County and to provide the framework for regulatory decisions and capital improvement priorities. The General Plan undergoes a comprehensive review every ten years, with the last review being completed in 2005.

The policy land use map, referred to as the Land Use Pattern Allocation Guide (LUPAG) map, is intended to guide the direction and quality of future developments in a coordinated and rational manner. According to the County of Hawaiʻi General Plan LUPAG, the Site is designated as "Extensive Agriculture" (Figure 6) that are not classified as Important Agriculture Land**.**

Specific General Plan goals most applicable to the Lālāmilo Well A Improvements are discussed below.

Energy

3.2 Goals

(a) Strive towards energy self-sufficiency.

(b) Establish the Big Island as a demonstration community for the development and use of natural energy resources.

Discussion: The proposed use of wind generated power from the neighboring Lālāmilo Wind Farm for as the operation of Well A will result in decreased energy consumption from fossil fuels. The utilization of wind sourced power provides alternative energy source to fossil fuel has a positive environmental impact and results in cost savings for DWS customers. Use of wind energy, supports the County of Hawai'i in meeting stated goal of striving toward energy self-sufficiency. Such action features the Big Island as having demonstrable communities that are realizing environmental and economic benefits by using natural energy resources.

Public Utilities

11.1.2 GOALS

(a) Ensure that properly regulated, adequate, efficient and dependable public and private utility services are available to users.

(b) Maximize efficiency and economy in the provision of public utility services. (c) Design public utility facilities to fit into their surroundings or concealed from public view.

11.1.3 Policies:

(a) Public utility facilities shall be designed to complement adjacent land uses and shall be operated to minimize pollution or disturbance.

(b) Provide utilities and service facilities that minimize total cost to the public and effectively service the needs of the community.

(c) Utility facilities shall be designed to minimize conflict with the natural environment and natural resources.

(d) Improvement of existing utility services shall be encouraged to meet the needs of users.

11.2.2 Policies:

(a) Water system improvements shall correlate with the County's desired land use development pattern.

(b) All water systems shall be designed and built to Department of Water Supply standards.

(e) Water system improvements should be first installed in areas that have established needs and characteristics, such as occupied dwellings, agricultural operations and other uses, or in areas adjacent to them if there is need for urban expansion.

Discussion: The Lālāmilo Well A Improvements support the provision of more reliable water resources for future demands of the Lālāmilo Water system. As the improvements will facilitate the use of a renewable energy resource from wind, it will provide utilities and service facilities that reduce the cost to the public and effectively meets the water demands of the community. The improvements are designed and built to comply with DWS standards, and correlate with County land use and projected future demands, which include the existing resorts (which are a substantial component of South Kohala's economy).

6.2.2 South Kohala Community Development Plan

The County of Hawaiʻi General Plan authorizes Community Development Plans (CDP) to translate broad General Plan goals, policies and standards as they apply to specific geographic regions on Hawaiʻi Island. The CDPs are also intended to serve as a forum for community input into land use, delivery of government services, and other land use issues relating to the CDP area. The Site is located within the South Kohala CDP planning area. A relevant district-wide policy contained in the South Kohala CDP includes:

5.11 Promote Alternative Energy.
South Kohala is blessed with strong winds and ample sunlight throughout the year. The County should support the development of more natural energy generating facilities.

Discussion: The proposed use of wind generated power from the neighboring Lālāmilo Wind Farm for as the operation of Well A will result in decreased energy consumption from fossil fuels. Use of wind energy, supports the South Kohala community in meeting their stated goal of promoting alternative energy from the district's abundant wind resources. Such action results in realizing environmental and economic benefits due to use of natural energy resources.

6.2.3 County of Hawaiʻi Zoning

Similar to the State Land Use Districts, the Hawaiʻi County Code regulates the type and location of development permitted on the island. Hawaiʻi County zoning designations, Chapter 25 HCC, are more specific in terms of describing permitted land uses. The Site is zoned Agriculture (A-5a).

During pre-consultation process, the County of Hawaiʻi Department of Planning confirmed that the Improvements inclusive of the up-sizing of the well pump to the original tested capacity, associated upgrades for piping and appurtenances; and the new control building "would be permitted uses as long as such use has been issued a plan approval."

6.3 MAJOR APPROVALS AND PERMITS

A listing of permits and approvals required for the Project is presented below:

Table 4: Approvals and Permits

Permit/Approval	Responsible Agency
Chapter 343, HRS Compliance	Office of Environmental Quality Control
Plan Approval	Hawaiʻi County, Department of Planning
National Pollutant Discharge Elimination System (NPDES) Permit (if over 1 ac. Land disturbance)	State Department of Health
Building Permit	Hawaiʻi County, Department of Public Works
Grading Permit	

7 ALTERNATIVES

This section identifies and evaluates a range of alternatives that could meet the purpose and need and possibly avoid, reduce, or minimize adverse environmental effects. The reference point to compare alternatives is the "No Action" alternative.

The primary purpose of Lālāmilo Well A Improvements, as discussed in Section 2.2 is to provide for future water demands of the Lālāmilo Water System, ensuring reliable water service to surrounding residential, commercial, and resort customers.

7.1 NO ACTION ALTERNATIVE

Under the "No Action" alternative, the Lālāmilo Well A Improvements would not commence and the Site would remain in its current state. This alternative adversely affects the ability of DWS to carry out its mission as a public utility, especially to adequately provide more reliable water service to areas that are prioritized for population and economic growth in the South Kohala District. If the demand for water is greater than the County's current supply, one or more of the following actions could occur: 1) DWS could make an appeal for customers to conserve their use of water; 2) DWS could raise the price of water, so "conservation" would result; and 3) certain large users may decide to develop their own water sources: whether potable, brackish with desalination and mixing with potable, or seawater with desalination and mixing with potable. Desalination requires greater energy, whether powered by fossil fuels or renewable sources.

The "No Action" alternative would not achieve DWS' objective to meet future water demand and require future action that is likely to have a more significant environmental impact. Also this alternative prevents the South Kohala District, County and State of Hawai'i from realizing their respective renewable energy goals, plans, and policies associated with this project. These reasons make the No Action Alternative an undesirable alternative.

7.2 ALTERNATIVE DESIGN WITH ADA COMPLIANT RESTROOM

To meet long-term needs of the facility, an ADA compliant restroom is included in the proposed design improvements. This would result in the use of 69.6 square feet of the Site for the restroom and total area of the control building being 839.1 square feet. This alternative would obviate the need for "port-a-potties", but require either the need for an independent wastewater system

(septic tank/leach field) or periodic collection and disposal. See Appendix B for conceptual site plan.

7.3 ALTERNATIVE DESIGN WITHOUT ADA COMPLIANT RESTROOM

This alternative would not require commitment of space on the Site for a restroom. The total area of the control building would be 821.3 square feet. Under this design alternative, the control building would be 17.8 square feet smaller than the design alternative with the restroom. Under this alternative, DWS employees would continue to utilize "port-a-potties" that are serviced on average weekly basis. See Appendix B for conceptual site plan.

7.4 ALTERNATIVE LOCATIONS

Alternative locations were not considered for the improvements, as improvements needed to be made to the existing Well A pump, piping and appurtenances.

8 FINDING AND DETERMINATION

To determine whether the Lālāmilo Well A Improvements may have a significant impact on the physical and human environment, all phases and expected consequences of the proposed project have been evaluated, including potential primary, secondary, short-range, long-range, and cumulative impacts. Based on this evaluation, the Approving Agency (County of Hawaiʻi Department of Water Supply) anticipates issuing a Finding of No Significant Impact (FONSI). The supporting rationale for this finding is presented in this chapter.

8.1 SIGNIFICANCE CRITERIA

The discussion below evaluates the significance of the Project's impacts based upon the Significance Criteria set forth in Hawaiʻi Administrative Rules section 11-200-12.

(1) Involves an irrevocable commitment to loss or destruction of any natural or cultural resource;

Discussion: The 1978 archaeological reconnaissance survey, conducted for the Lālāmilo Water System; inclusive of its *mauka* wells did not record any archaeological or cultural resources at the Site (discussed in Section 4.1). As no Federal or State listed threatened or endangered species are known to occur on the Site and informed by the 2013 biological reconnaissance survey conducted within the vicinity of the Site no significant impacts are expected for protected plant and wildlife species (discussed in Sections 3.6 and 3.7). The improvements will not involve an irrevocable commitment to, loss, or destruction of any natural or cultural resource. The improvements are being done on existing facilities and construction of the small control building will occur on a previously cleared and graded Site.

(2) Curtails the range of beneficial uses of the environment;

Discussion: The improvements will not curtail the range of beneficial uses of the environment. The improvements are being done on existing facilities and construction of the control building will occur on a previously cleared and graded Site. The Lālāmilo Well A Improvements will enable DWS to meet current and future water demands of residential, business, public, and resort customers. As wind generated renewable energy will power the Well pumps, this also has a positive effect on the environment and decreased cost for water services to DWS customers.

(3) Conflicts with the State's long term environmental policies or goals and guidelines as expressed in Chapter 344, HRS; and any revisions thereof and amendments thereto, court decisions, or executive orders;

Discussion: The environmental policies enumerated in Chapter 344, HRS promote conservation of natural resources and an enhanced quality of life for all citizens. The improvements are not expected to significantly impact any natural resources. The Lālāmilo Well A Improvements will promote sustainability, as the Site will include wind energy to power the operation of this and other wells in this system.

(4) Substantially affects the economic or social welfare of the community or State;

Discussion: The Lālāmilo Well A Improvements are likely to have a positive impact on the economic and social welfare of the community and State. Construction of the improvements will provide economic benefits in the form of construction jobs, construction spending, and multiplier effects on the local economy. In addition, use of wind power as one of two primary sources of energy results in the reduced dependency of fossil fuel to operate the well and reduced costs for DWS customers.

(5) Substantially affects public health;

Discussion: The Lālāmilo Well A Improvements are likely to have a positive impact on public health as the improvements enhances DWS's capability of providing reliable sources of drinking water to its residential, business, public, and resort customers.

(6) Involves substantial secondary impacts, such as population changes or effects on public facilities;

Discussion: The improvements will not have substantial secondary adverse impacts. The improvements will not generate new permanent residents or attract visitors, which would require public facilities or services.

(7) Involves a substantial degradation of environmental quality;

Discussion: The improvements will not involve a substantial degradation of environmental quality. In many ways, the improvements improve the environmental quality of the area. The Lālāmilo Well A Improvements are being done on existing facilities and the new control building will be constructed at the existing Site located on previously cleared and graded land. As the Site

will utilize wind sourced energy to power the well's operation, it will promote sustainability and reduce the need for fossil based fuels.

(8) Is individually limited but cumulatively has considerable effect on the environment, or involves a commitment for larger actions;

Discussion: While the Lālāmilo Well A Improvements are a separate action to the development of the Lālāmilo Wind Farm, the cumulative impacts enable DWS to provide water service that reduces environmental impact and lessens energy costs for its customers. The impacts of the Wind Farm are not anticipated to be significant and when considered cumulatively with the Lālāmilo Well A Improvements will not result in cumulative adverse impacts.

(9) Substantially affects a rare, threatened or endangered species or its habitat;

Discussion: No rare, threatened, or endangered plants or animals are known to exist within the Site. Though to avoid impacts to endangered nocturnal seabirds, no construction will be scheduled at night to reduce chance of bird collision caused by lighting.

(10) Detrimentally affects air or water quality or ambient noise levels;

Discussion: No State or Federal air quality standards will be violated during or after the construction of the Lālāmilo Well A Improvements. The only anticipated issues related to air quality may be from the potential of dust being generated during construction; however, construction activities would be temporary. Long-term negative impacts related to air quality are not expected, and is actually expected to reverse as the availability of electricity from the Lālāmilo Wind Farm will reduce the burning of fossil fuels as the primary source of power.

(11) Affects or is likely to suffer damage by being located in an environmentally sensitive area, such as a flood plain, tsunami zone, beach, erosion-prone area, geologically hazardous land, estuary, fresh water, or coastal waters;

Discussion: The Site is not located in an environmentally sensitive area such as a flood plain, tsunami zone, beach, erosion-prone area, geologically hazardous land, estuary, fresh water, or coastal waters. Thus the proposed project is not likely to suffer damage associated with being located in an environmentally sensitive area.

(12) Substantially affects scenic vistas and view planes identified in County or State plans or studies; or,

Discussion: The Lālāmilo Well A improvements are far removed from the area's major public highways: Queen Ka'ahumanu Highway and Kawaihae Road. Given the Site's remote location no scenic vistas or view planes will be substantially affected.

(13) Requires substantial energy consumption.

Discussion: Since the Lālāmilo Wind Farm is proposed to provide an alternative energy source to fossil fuel-generated electricity, it is expected that when the Lālāmilo Wind Farm is producing energy, the impact of energy consumption by the Lālāmilo Well A improvements will be minimal.

8.2 ANTICIPATED DETERMINATION

Pursuant to Chapter 343, HRS, the approving agency has issued an Anticipated Finding of No Significant Impact (AFONSI) for this Draft Environmental Assessment. This proposed finding is founded on the basis of impacts and mitigation measures examined in this document, public comments received during the pre-consultation phase, and analyzed under the above criteria.

9 CONSULTATION

9.1 PRE-CONSULTATION

Pre-consultation was conducted prior to preparation of the Draft EA. The purpose of the pre-consultation period is to consult with individuals, community organizations, private groups, and government agencies with technical expertise, or an interest or will be affected by the proposed action. This process is part of the scoping process for the Draft EA. Comments and input received during this period are used to identify environmental issues and concerns to be addressed in the Draft EA, which in turn undergoes a 30-day public comment period.

9.1.1 Written Comments

The Environmental Consultant mailed letters to the following private groups and government agencies notifying them that an EA was being prepared for the Lālāmilo Well A Improvements and soliciting any concerns and comments. The comments received and corresponding responses are reproduced in Appendix A.

State of Hawai‘i

- Office of Environmental Quality Control*
- Department of Accounting and General Services*
- Department of Business, Economic Development & Tourism (DBEDT)
- DBEDT – Energy Office
- DBEDT – Office of Planning*
- Department of Defense*
- Department of Education
- Department of Hawaiian Home Lands
- Department of Health (DOH)*
- Department of Human Services*
- Department of Labor and Industrial Relations
- Department of Land and Natural Resources (DLNR)*
- DLNR – Historic Preservation Division
- Department of Transportation*
- Office of Hawaiian Affairs (OHA)*
- UH Water Resources Research Center

Federal

- U.S. Army Corps of Engineers – Regulatory Branch*
- U.S. Fish and Wildlife Service
- Federal Emergency Management Agency

County of Hawai‘i

- Planning Department*
- Department of Environmental Management*
- Department of Parks and Recreation
- Department of Public Works
- Department of Water Supply
- Fire Department*
- Police Department*

Consulted Parties

- Hawai'i Electric Light Company, Inc.*

During the pre-consultation process, the Office of Hawaiian Affairs suggested four additional organizations be contacted. Based on the OHA comments, letters were sent in preparation of this Draft EA to the Association of Hawaiian Civic Clubs – Hawai'i Council Moku O Keawe, Waimea Hawaiian Civic Club, South Kohala Hawaiian Civic Club, and Kailapa Hawaiian Homestead Association.

9.2 DRAFT ENVIRONMENTAL ASSESSMENT

The Draft EA will be distributed to the following agencies, organizations, and individuals. Comments received on the Draft EA will be included in the Final EA.

State of Hawai‘i

- Office of Environmental Quality Control*
- Department of Accounting and General Services
- Department of Business, Economic Development & Tourism (DBEDT)
- DBEDT – Energy Office
- DBEDT – Office of Planning

- Department of Defense
- Department of Education
- Department of Hawaiian Home Lands
- Department of Health (DOH)
- Department of Human Services
- Department of Labor and Industrial Relations
- Department of Land and Natural Resources (DLNR)
- DLNR – Historic Preservation Division
- Department of Transportation
- Office of Hawaiian Affairs
- UH Water Resources Research Center

Federal

- U.S. Army Corps of Engineers – Regulatory Branch
- U.S. Fish and Wildlife Service
- Federal Emergency Management Agency

Hawaiʻi County

- Planning Department
- Department of Environmental Management
- Department of Parks and Recreation
- Department of Public Works
- Department of Water Supply
- Fire Department
- Police Department
- Council Members

Consulted Parties

- Hawai'i Electric Light Company, Inc.
- Association of Hawaiian Civic Clubs – Hawai'i Council Moku O Keawe
- Waimea Hawaiian Civic Club
- South Kohala Hawaiian Civic Club

- Kailapa Hawaiian Homestead Association

Libraries

- Hawaiʻi State Library – Hawaiʻi Documents Center
- Hawaiʻi State Library – Nearest Library

10 REFERENCES

Archaeological Research Center Hawaii, Inc. . (1978). *Archaeological Reconnaissance of Proposed Water Pipeline for the South Kohala Water System.* Honolulu: ARCH.

ASM Affiliates, Inc. (2014). *An Archaeological Inventory Survey of the Lalamilo Wind Farm Repowering Project.* ASM Affiliates.

B.D. Neal & Associates. (2002). *Air Quality Study for the Proposed Department of Hawaiian Home Lands Lālāmilo Project.* PBR HAWAII, Inc.

Belt Collins Hawai'i. (2001). *Final Environmental Impact Statement Hapuna Beach State Recreation Area Expansion.* Honolulu, Hawai'i: Belt Collins Hawai'i.

COH. (2005). *County of Hawai'i (COH) General Plan.* Retrieved from http://www.cohplanningdept.com/wp-content/uploads/2014/07/GP2005AmendthruOrd14-097.pdf

COH. (2008). *County of Hawai'i Data Book*. Retrieved from County of Hawai'i: http://www.hawaiicounty.gov/databook_2008/dbooktoc.htm

COH. (2012). *County of Hawai'i (COH) Data Book 2012a.* County of Hawai'i.

COH. (2015). *05 2015 May 2015 County of Hawaii Monthly Economic Statitstics.* Retrieved from County of Hawai'i (COH) Department of Rearch & Development: http://records.co.hawaii.hi.us/Weblink8/1/doc/75131/Electronic.aspx

DLNR. (1980). *Lalamilo Water System Revised Enviornmental Impact Statement.* South Kohala, Hawai'i: State of Hawaii, Department of Land and Natural Resources.

DOH. (2013). *State of Hawaii Department of Health Clean Air Branch*. Retrieved from Annual Summary 2012 Air Quality Data: http://health.hawaii.gov/cab/files/2013/05/aqbook_2012.pdf

Escott, G. (2008). *Archaeological Monitorin Plan (AMP) for Munitions and Explosives of Concern (MEC) and Supporting Functions for Former Waikoloa Maneuver Area, Hawai'i on Portions (1,320,063 acres) of the Former Wiakoloa Maneuver Area, Lalamilo and 'Ouli Ahupua'a.* Honolulu: Prepared for U.S. Army Corps of Engineers District.

Giambelluca, T., Chen, Q., Frazier, A., Price, J., Chen, Y., Chu, P., . . . Delparte, D. (2013). (3.-3. d.-D.-1.-0. Bull. Amer. Meteor. Soc. 94, Producer) Retrieved from Online Rainfall Atlas of Hawaiʻi.

Hawai'i County Planning Department. (2008). *South Kohala Community Development Plan.* Hawai'i County Council .

Hawai'i Police Department. (2014). *2013-2015 Annual Report.* Retrieved from Hawaii Police: http://www.hawaiipolice.com/wp-content/uploads/2011/10/2013-2014-Annual-Report.pdf

Honolulu Star Advertiser. (2015, October 1). Hawaii island wind farm breaks ground. *Honolulu Star Advertiser*, p. 1.

Insight Enviornmental . (2013). *Final Hawaiian Hoary Bat Acoustic Monitoring Report for the Proposed Lalamilo Wind Farm.* Kea'au, Hawai'i: Insight Environmental LLC. Prepared for County of Hawaii Deaprtment of Water Supply.

Kona Community Hospital. (2015). *About Us*. Retrieved from Kona Community Hospital: http://www.kch.hhsc.org/about-us/default.aspx

Longo, B. M. (2013, July). *Adverse Health Effects Associated with Increased Activity at Kīlauea Volcano: A Repeated Population-Based Survey*. Retrieved from International Scholarly Research Notices: http://www.hindawi.com/journals/isrn/2013/475962/

NHD . (2015). *National Hydrography Data Set*. Retrieved from National Hydrography Data Set: National Hydrography Dataset

NOAA. (2015). *Tsunami Evacuation Map Hawa i*. Retrieved from National Oceanic Atmospheric Administration: http://tsunami.csc.noaa.gov/

NRCS. (2015). *Soil Survey Geographic Database for Island of Hawai'i Area*. Retrieved from Natural Resources Conservation Service : http://websoilsurvey.sc.egov.usda.gov/App/HomePage.htm

RMS. (2006). *2006 Kiholo Bay, Hawaii Earthquake RMS Event Report.* Risk Management Solutions, Inc. (RMS).

Sato, H. W. (1973). *Soil Survey of the Island of Hawaii, State of Hawaii.* . Washington, DC: U.S. Government Printing Office.

Sherrod, D. S. (2007). *Geological Map of the State of Hawai'i Open-File Report 2007-1089, 83 p., 8 plates, scales 1:100,000 and 1:250,00, with GIS Database.* USGS.

SMS Research & Marketing Services, Inc. (2010, October). *State of Hawaii.* Retrieved from DBEDT: http://files.hawaii.gov/dbedt/op/spb/Rural_Economic_Development_Report_010713_Final.pdf

State of Hawaiʻi. (2001). *Chapter 343.* Retrieved July 2013, from Revised Hawaiʻi Statutes: http://www.capitol.hawaii.gov/hrscurrent/Vol06_Ch321-344/HRS0343/HRS_0343-.htm

State of Hawaiʻi Department of Health. (2013). *2012 State of Hawaiʻi Water Quality Monitoring and Assessment Report.* Integrated Report to the U.S. Environmental Protection Agency and the U.S. Congress Pursuant to 303(d) and 305(b), Clean Water Act (P.L.97-117), Honolulu.

State of Hawai'i. (2008). *Commission on Water Resource Management, Hydorologic Units, Island of Hawai'i.* State of Hawai'i.

State of Hawai'i DOE. (2015). *Official Enrollment Count School Year 2014-2015.* Honolulu: State of Hawai'i Department of Education.

Tetra Tech. (2014). *Lalamilo Wind Farm Repowering Project Draft Environmental Assessment.* Tetra Tech.

Tetra Tech. (2014). *2013 Biological Reconnaissance Survey Lalamilo Wind Farm Repower Project.* Hawai'i County, Hawai'i: Tetra Tech.

Tetra Tech, Inc. (2014, June). *Lalamilo Wind Farm Repowering Project Draft Environmental Assesment.* Retrieved from Office of Environmental Quality Control: http://oeqc.doh.hawaii.gov/Shared%20Documents/EA_and_EIS_Online_Library/Hawaii/2010s/2014-06-23-HA-5B-DEA-Lalamilo-Wind-Farm-Repowering-Project.pdf

Tomonari-Tuggle, M. (1988). *North Kohala: Perception of a Changing Community. A cultural Resource Management Study*. Prepared for Divsion of State Parks, Outdoor Recreation, and Historic Sites, Department of Land and Natural Resources, State of Hawai'i .

U.S. Department of Agriculture Soil Conservation Service. (1972). *Soil Survey of Islands of Kauai, Oahu, Maui, Molokai, and Lanai, State of Hawaii.* Washington, D.C.: U.S. Government Printing Office.

USACE. (2014). *U.S. Army Corps of Engineers (USACE) Pacific Ocean Division*. Retrieved from Waikoloa Maneuver Area Fact Sheet: http://www.poh.usace.army.mil/Portals/10/docs/fuds/WMA%20UXO%20Safety4.pdf

USFS. (2008). *U.S. Forest Service (USFS)*. Retrieved from RMRS General Technical Reports (RMRS-GTR-42, vol. 6): http://www.fs.fed.us/rm/pubs/rmrs_gtr042_6.html

USFWS. (2014). *National Wetlands Inventory Online Data Mapper*. Retrieved from U.S. Fish and Wildlife Service: http://www.fws.gov/wetlands/data/mapper.HTML

USGS. (1997, July 18). *Volcanic and Seismic Hazrds on the Island of Hawai'i*. Retrieved from U.S. Geological Survey: pubs.usgs.gov/gip/7000036/report.pdf

Wolfe, E. W. (1996). *Geological Map of the Island of Hawai'i.* Compiled by USGS IMPA: 2524-A.

APPENDIX A:
PRE-CONSULTATION CORRESPONDENCE

Lālāmilo Well A Improvements
PRE-CONSULTATION COMMENTS AND RESPONSES

Agencies/Organizations/Individuals	Pre-Consult	Comment Date
Department of Water Supply (Approving Agency)	Yes	
Office of Environmental Quality Control	Yes	8/28/2015
STATE		
Department of Accounting and General Services	Yes	9/11/2015
Department of Business, Economic Development & Tourism	Yes	
DBEDT - Energy Office	Yes	
DBEDT - Office of Planning	Yes	8/26/2015
Department of Defense	Yes	8/28/2015
Department of Education	Yes	
Department of Hawaiian Home Lands	Yes	
Department of Health - Clean Water Branch	Yes	9/10/2015
Department of Health - Environmental Planning Office	Yes	8/28/2015
Department of Human Services	Yes	8/26/2015
Department of Labor and Industrial Relations	Yes	
Department of Land and Natural Resources	Yes	9/16/2015
DLNR - Historic Preservation Division	Yes	
Department of Transportation	Yes	9/8/2015
Office of Hawaiian Affairs	Yes	9/9/2015
UH Water Resources Research Center	Yes	
FEDERAL		
U.S. Army - Engineer Division	Yes	9/14/2015
U.S. Fish and Wildlife Service	Yes	
Federal Emergency Management Agency	Yes	
COUNTY		
Department of Environmental Management	Yes	9/10/2015
Department of Parks and Recreation	Yes	
Department of Planning	Yes	9/3/2015
Department of Public Works	Yes	
Department of Research and Development	Yes	
Department of Transportation	Yes	
Department of Water Supply	Yes	
Hawaii Fire Department	Yes	8/25/2015
Police Department	Yes	8/28/2015
CITIZEN GROUPS/INDIVIDUALS, CONSULTED PARTIES		
Hawai'i Electric Light Company, Inc.	Yes	9/2/2015

DAVID Y. IGE
GOVERNOR OF HAWAII

JESSICA E. WOOLEY
DIRECTOR

STATE OF HAWAI'I
OFFICE OF ENVIRONMENTAL QUALITY CONTROL
Department of Health
235 South Beretania Street, Suite 702
Honolulu, Hawai'i 96813
Telephone (808) 586-4185
Facsimile (808) 586-4186
Email: oeqchawaii@doh.hawaii.gov

File No.
OEQC 15-088

August 28, 2015

Keli'i Kapali, Senior Planner
PBR Hawaii & Associates, Inc.
1001 Bishop Street, Suite 650
Honolulu, Hawai'i 96813

Dear Mr. Kapali,

SUBJECT: Pre- Assessment Consultation for Proposed Improvements at Lālāmilo Well A, Lālāmilo, South Kohala District, Island and County of Hawai'i

The Office of Environmental Quality Control has reviewed the information contained in your August 18, 2015, letter about the subject project, and based on our understanding of the limited information provided, offers the following comments for your consideration.

Pursuant to Chapter 343, Hawai'i Revised Statues, and the provisions of Chapter 11-200, Hawai'i Administrative Rules, as an Agency Action by the Hawai'i Department of Water Supply, this agency is presumed to be the "Proposing and Determination agency" that implements the environmental review process for this project by either 1) anticipating a Finding of No Significant Impact and then preparing a Draft Environmental Assessment (EA) for public review and comment, or 2) based on their judgment and experience, deciding to by-pass the EA step and proceeding directly to the Environmental Impact Statement (EIS) Preparation Notice step if significant effects may or will occur from the project.

In the event that the agency makes a determination to prepare an EIS, either initially or if significant impacts are identified in the Final EA, then the county Mayor, as the "accepting authority," would determine the acceptability of the subsequent Final EIS.

While we appreciate your effort to solicit early advice and input on the proposed project, the information you provide in your solicitation letter offers limited guidance/description of the nature of the project. We believe your scoping process would be improved by including sufficiently thorough information to enable recipients and the public to understand the project better and to be able to provide substantive feedback.

As you prepare to submit documents for publication and public review in The Environmental Notice, we appreciate your diligence in using current and correct publication forms available online. If you have any questions as you navigate this process, please consult our website at http://health.hawaii.gov/oeqc (see in particular the link to the Environmental Assessment Preparation Toolkit on the right panel) or contact our office at (808) 586-4185.

Mahalo.

Sincerely,

Jessica Wooley

Jessica E. Wooley, Director
Office of Environmental Quality Control

PBR HAWAII
& ASSOCIATES, INC.

PRINCIPALS

THOMAS S. WITTEN, ASLA
Chairman

R. STAN DUNCAN, ASLA
President

RUSSELL Y. J. CHUNG, FASLA, LEED®AP BD+C
Executive Vice-President

VINCENT SHIGEKUNI
Vice-President

GRANT T. MURAKAMI, AICP, LEED®AP BD+C
Vice-President

TOM SCHNELL, AICP
Principal

W. FRANK BRANDT, FASLA
Chairman Emeritus

ASSOCIATES

RAYMOND T. HIGA, ASLA
Senior Associate

KIMI MIKAMI YUEN, LEED®AP BD+C
Senior Associate

SCOTT ALIKA ABRIGO, LEED®AP BD+C
Managing Director - Kapolei

ROY TAKEMOTO
Managing Director - Hilo

SCOTT MURAKAMI, ASLA, LEED®AP
Associate

DACHENG DONG, LEED®AP
Associate

MARC SHIMATSU, ASLA
Associate

CATIE CULLISON, AICP
Associate

HONOLULU OFFICE
1001 Bishop Street, Suite 650
Honolulu, Hawai'i 96813-3484
Tel: (808) 521-5631
Fax: (808) 523-1402
E-mail: sysadmin@pbrhawaii.com

KAPOLEI OFFICE
1001 Kamokila Boulevard
Kapolei Building, Suite 313
Kapolei, Hawai'i 96707-2005
Tel: (808) 521-5631
Fax: (808) 535-3163

HILO OFFICE
1719 Haleloke Street
Hilo, Hawai'i 96720-1553
Tel/Cel: (808) 315-6878

printed on recycled paper

November 6, 2015

Mr. Scott Glenn, Interim Director
Office of Environmental Quality and Control
State of Hawai‘i
235 South Beretania Street, Suite 702
Honolulu, Hawai‘i 96813

SUBJECT: PRE-ASSESSMENT CONSULTATION FOR THE PROPOSED IMPROVEMENTS AT LĀLĀMILO WELL A, LĀLĀMILO, SOUTH KOHALA DISTRICT, SIALND AND COUNTY OF HAWAI‘I, TMK (3)6-6-001:068

Dear Mr. Glenn,

We are responding to the Office of Environmental Quality and Control's (OEQC) letter from Director Jessica Wooley, dated August 28, 2015 (OEQC 15-088), regarding pre-consultation for the Lālāmilo Well A Improvements Draft Environmental Assessment (EA). As the planning consultant for the applicant, the County of Hawai‘i Department of Water Supply, we acknowledge her comments about improving the scoping process for the project. The Draft EA will provide additional information and discuss the proposed improvements, potential impacts, and possible mitigation measures to avoid or reduce impacts. This will enable the public to understand the project better and to be able to provide substantive feedback on the project. As we prepare to submit documents for publication and public review we will ensure the current and correct publication forms are used.

Thank you for your participation in the environmental review process. OEQC's letter will be included in the Draft EA.

Sincerely,
PBR HAWAII

Keli‘i Kapali
Planner

cc: County of Hawai‘i Department of Water Supply

O:\Job30\3080.02 Lalamilo Well EA\EA\Pre-Consultation\Responses\OEQC.docx

DAVID Y. IGE
GOVERNOR

DOUGLAS MURDOCK
Comptroller

AUDREY HIDANO
Deputy Comptroller

STATE OF HAWAII
DEPARTMENT OF ACCOUNTING AND GENERAL SERVICES
P.O. BOX 119, HONOLULU, HAWAII 96810-0119

(P)1242.5

SEP 11 2015

Mr. Keli'i Kapali, Senior Planner
PBR Hawaii & Associates, Inc.
1001 Bishop Street, Suite 650
Honolulu, HI 96813-3484

Dear Mr. Kapali:

Subject: Pre-Assessment Consultation
Proposed Improvements at Lalamilo Well A
Lalamilo, South Kohala District, Island of Hawaii
TMK: (3) 6-6-001:008

This is in response to your letter dated August 13, 2015 regarding the subject project. The proposed project does not impact any of the Department of Accounting and General Services' projects or existing facilities, and we have no comments to offer at this time.

If there are any questions, your staff may call Mr. David DePonte of the Public Works Division at 586-0492.

Sincerely,

For DOUGLAS MURDOCK
Comptroller

c: Mr. Jerry Watanabe, DAGS Hawaii District Office

PBR HAWAII
& ASSOCIATES, INC.

PRINCIPALS

THOMAS S. WITTEN, ASLA
Chairman

R. STAN DUNCAN, ASLA
President

RUSSELL Y. J. CHUNG, FASLA, LEED®AP BD+C
Executive Vice-President

VINCENT SHIGEKUNI
Vice-President

GRANT T. MURAKAMI, AICP, LEED®AP BD+C
Vice-President

TOM SCHNELL, AICP
Principal

W. FRANK BRANDT, FASLA
Chairman Emeritus

ASSOCIATES

RAYMOND T. HIGA, ASLA
Senior Associate

KIMI MIKAMI YUEN, LEED®AP BD+C
Senior Associate

SCOTT ALIKA ABRIGO, LEED®AP BD+C
Managing Director - Kapolei

ROY TAKEMOTO
Managing Director - Hilo

SCOTT MURAKAMI, ASLA, LEED®AP
Associate

DACHENG DONG, LEED®AP
Associate

MARC SHIMATSU, ASLA
Associate

CATIE CULLISON, AICP
Associate

November 6, 2015

Mr. Douglas Murdock, Comptroller
Department of Accounting & General Services
State of Hawai‘i
P.O. Box 119
Honolulu, Hawai‘i 96810-0119

Attention: Mr. David DePonte

SUBJECT: PRE-ASSESSMENT CONSULTATION FOR THE PROPOSED IMPROVEMENTS AT LALAMILO WELL A, LALAMILO, SOUTH KOHALA DISTRICT, SIALND AND COUNTY OF HAWAI‘I, TMK (3)6-6-001:068

Dear Mr. Murdock,

Thank you for your letter ((P)1242.5) dated September 11, 2015, regarding pre-consultation for the Lālāmilo Well A Improvements Draft Environmental Assessment (EA). As the planning consultant for the applicant, the County of Hawai‘i Department of Water Supply, we acknowledge that the proposed improvements at Lālāmilo Well A, do not impact any Department of Accounting & General Services' (DAGS) projects or existing facilities, and that DAGS has no comments to offer at this time.

Thank you for your participation in the environmental review process. Your letter will be included in the Draft EA.

Sincerely,
PBR HAWAII

Keli‘i Kapali
Planner

cc: County of Hawai‘i Department of Water Supply

O:\Job30\3080.02 Lalamilo Well EA\EA\Pre-Consultation\Responses\DAGS.docx

HONOLULU OFFICE
1001 Bishop Street, Suite 650
Honolulu, Hawai'i 96813-3484
Tel: (808) 521-5631
Fax: (808) 523-1402
E-mail: sysadmin@pbrhawaii.com

KAPOLEI OFFICE
1001 Kamokila Boulevard
Kapolei Building, Suite 313
Kapolei, Hawai'i 96707-2005
Tel: (808) 521-5631
Fax: (808) 535-3163

HILO OFFICE
1719 Haleloke Street
Hilo, Hawai'i 96720-1553
Tel/Cel: (808) 315-6878

printed on recycled paper

OFFICE OF PLANNING
STATE OF HAWAII

DAVID Y. IGE
GOVERNOR

LEO R. ASUNCION
ACTING DIRECTOR
OFFICE OF PLANNING

235 South Beretania Street, 6th Floor, Honolulu, Hawaii 96813
Mailing Address: P.O. Box 2359, Honolulu, Hawaii 96804

Telephone: (808) 587-2846
Fax: (808) 587-2824
Web: http://planning.hawaii.gov/

Ref. No. P-14883

August 26, 2015

Ms. Keli'i Kapili
Senior Planner
PBR HAWAII & Associates, Inc.
1001 Bishop Street, Suite 650
Honolulu, Hawaii 96813-3484

Dear Ms. Kapili:

Subject: Pre-consultation for the Proposed Improvements at Lalamilo Well A
Lalamilo, South Kohala District, Hawaii
TMK: (3) 6-6-001:068

Thank you for the opportunity to provide comments on the pre-consultation request dated August 18, 2015 for a Draft Environmental Assessment (Draft EA) for the Lalamilo Well A improvement project. This pre-consultation request was carried out on behalf of the County of Hawaii Board of Water Supply.

It is our understanding that in order to meet the anticipated future water demand of the South Kohala region, the Hawaii Board of Water Supply proposes to upgrade the well pump to a larger capacity, renovate the piping and appurtenances of the well station, and construct a new control building.

The current site includes an existing small pump control building, two electrical transformers, and an access road enclosed by a chain link fence and double swing gate. The site will be improved to accommodate the new layout of the building and pump and pipe system.

The Office of Planning (OP) has reviewed the transmitted material and has the following comments to offer:

1. Pursuant to the Hawaii Administrative Rules § 11-200-17(h) – land use plans, policies, and controls – this well improvement project must demonstrate that it is consistent with a number of state environmental, social, and economic goals and policies for land-use and housing development. OP provides technical assistance to state and county agencies in administering the statewide planning system in Hawaii Revised Statutes (HRS) Chapter 226, the Hawaii State Plan. The Hawaii State Plan provides goals, objectives, policies, and priority guidelines for growth, development, and the allocation of resources throughout the State. The Hawaii State Plan includes

diverse objectives and policies of state interest including but not limited to the economy, agriculture, the visitor industry, federal expenditure, the physical environment, facility systems, socio-cultural advancement, climate change adaptation, and sustainability.

The Draft EA should include an analysis that addresses whether the proposed project conforms or is in conflict with the goals, objectives, policies, and priority guidelines in the Hawaii State Plan.

2. The coastal zone management area is defined as "all lands of the State and the area extending seaward from the shoreline to the limit of the State's police power and management authority, including the U.S. territorial sea" see HRS § 205A-1 (definition of "coastal zone management area").

   HRS Chapter 205A requires all State and county agencies to enforce the coastal zone management (CZM) objectives and policies. The Draft EA should include an assessment as to how the proposed project conforms to the CZM objectives and its supporting policies set forth in HRS § 205A-2. The assessment on compliance with HRS Chapter 205A is an important component for satisfying the requirements of HRS Chapter 343. These objectives and policies include: recreational resources, historic resources, scenic and open space resources, coastal ecosystems, economic uses, coastal hazards, managing development, public participation, beach protection, and marine resources.

3. The project site is located in a relatively isolated area in the higher elevations of South Kohala. The area is in the State Agricultural Land Use district and is within the Pohakuloa watershed. Although there are limited water resources in the area, the project site is within the upper elevations of Kohala. Ultimately, the area is connected to coastal marine resources located down gradient. In order to ensure the coastal waters and marine environment of Kohala remain protected, the negative effects of stormwater runoff should be considered and mitigated. The Draft EA should summarize the area's State Land Use District classification, County of Hawaii zoning as it relates to density and erosion controls, and this project's relation to wetlands, perennial streams, tsunami evacuation zone, and flood zone. These items, as well as the nearshore water quality classification, should be considered when developing mitigation measures to protect the coastal ecosystem.

   OP has a number of resources available to assist in the development of projects which ensure sediment and stormwater control on land, thus protecting the nearshore environment. OP recommends consulting these guidance documents and stormwater

evaluative tools when developing strategies to address polluted runoff. They offer useful techniques to keep soil and sediment in place and prevent contaminating nearshore waters, while considering the practices best suited for each project. These evaluative tools that should be used during the design process include:

- Hawaii Watershed Guidance provides direction on site-appropriate methods to safeguard Hawaii's watersheds and implement watershed plans http://files.hawaii.gov/dbedt/op/czm/initiative/nonpoint/HI Watershed Guidance Final.pdf

- Stormwater Impact Assessments can be used to identify and evaluate information on hydrology, stressors, sensitivity of aquatic and riparian resources, and management measures to control runoff, as well as consider secondary and cumulative impacts to the area http://files.hawaii.gov/dbedt/op/czm/initiative/stomwater_imapct/final_storm water_impact_assessments_guidance.pdf

- Low Impact Development (LID), A Practitioners Guide covers a range of structural best management practices (BMP's) for stormwater control management, roadway development, and urban layout that minimizes negative environmental impacts http://files.hawaii.gov/dbedt/op/czm/initiative/lid/lid_guide_2006.pdf

If you should have any questions, please contact Josh Hekekia of our office at (808) 587-2845.

Sincerely,

for Leo R. Asuncion
Acting Director

PBR HAWAII
& ASSOCIATES, INC.

PRINCIPALS

THOMAS S. WITTEN, ASLA
Chairman

R. STAN DUNCAN, ASLA
President

RUSSELL Y. J. CHUNG, FASLA, LEED®AP BD+C
Executive Vice-President

VINCENT SHIGEKUNI
Vice-President

GRANT T. MURAKAMI, AICP, LEED®AP BD+C
Vice-President

TOM SCHNELL, AICP
Principal

W. FRANK BRANDT, FASLA
Chairman Emeritus

ASSOCIATES

RAYMOND T. HIGA, ASLA
Senior Associate

KIMI MIKAMI YUEN, LEED®AP BD+C
Senior Associate

SCOTT ALIKA ABRIGO, LEED®AP BD+C
Managing Director - Kapolei

ROY TAKEMOTO
Managing Director - Hilo

SCOTT MURAKAMI, ASLA, LEED®AP
Associate

DACHENG DONG, LEED®AP
Associate

MARC SHIMATSU, ASLA
Associate

CATIE CULLISON, AICP
Associate

HONOLULU OFFICE
1001 Bishop Street, Suite 650
Honolulu, Hawai'i 96813-3484
Tel: (808) 521-5631
Fax: (808) 523-1402
E-mail: sysadmin@pbrhawaii.com

KAPOLEI OFFICE
1001 Kamokila Boulevard
Kapolei Building, Suite 313
Kapolei, Hawai'i 96707-2005
Tel: (808) 521-5631
Fax: (808) 535-3163

HILO OFFICE
1719 Haleloke Street
Hilo, Hawai'i 96720-1553
Tel/Cel: (808) 315-6878

printed on recycled paper

November 6, 2015

Mr. Leo R. Asuncion, Acting Director
Office of Planning
State of Hawai‘i
Department of Business, Economic Development & Tourism
P.O. Box 2359
Honolulu, Hawai‘i 96804

Attn: Josh Hekekia

SUBJECT: PRE-ASSESSMENT CONSULTATION FOR THE PROPOSED IMPROVEMENTS AT LĀLĀMILO WELL A, LĀLĀMILO, SOUTH KOHALA DISTRICT, SIALND AND COUNTY OF HAWAI‘I, TMK (3)6-6-001:068

Dear Mr. Asuncion,

Thank you for your letter (Ref. No. P-14883) dated August 26, 2015, regarding pre-consultation for the Lālāmilo Well A Improvements Draft Environmental Assessment (EA). As the planning consultant for the applicant, the County of Hawai‘i Department of Water Supply, we have reviewed the Office of Planning's (OP) comments with regards to the proposed improvements at Lālāmilo Well A and offer the following responses.

1. The Draft EA will include an analysis as to how the Lālāmilo Well A improvements conform to the Hawai‘i State Plan, Chapter 226, Hawaii Revised Statues (HRS).

2. The Draft EA will include an assessment as to how the Lālāmilo Well A improvements conform to the Coastal Zone Management objectives and supporting policies that are set forth in 205A-2, HRS.

3. The Draft EA will include a discussion of the ability of the Lālāmilo Well A improvements to conform with state and county plans, policies, and controls. We will review the OP Stormwater Impact Assessment and identify possible best practices related to stormwater design and low-impact development so that the construction of the Lālāmilo Well A improvements can avoid or reduce any impacts on coastal waters, marine environments, wetlands, or perennial streams.

Thank you for your participation in the environmental review process. Your letter will be included in the Draft EA.

Sincerely,
PBR HAWAII

Keli‘i Kapali
Planner

cc: County of Hawai‘i Department of Water Supply

DAVID Y. IGE
GOVERNOR

ARTHUR J. LOGAN
MAJOR GENERAL
ADJUTANT GENERAL

KENNETH S. HARA
COLONEL
DEPUTY ADJUTANT GENERAL

STATE OF HAWAII
DEPARTMENT OF DEFENSE
OFFICE OF THE ADJUTANT GENERAL
3949 DIAMOND HEAD ROAD
HONOLULU, HAWAII 96816-4495

August 28, 2015

PBR HAWAII & Associates, Inc.
1001 Bishop Street
ASB Tower, Suite 650
Honolulu, Hawai'i 96813

Attn.: Ms. Keli'i Kapali

Subject: Pre-Assessment Consultation for Proposed Improvements at Lalamilo Well A, Lalamilo, South Kohala District, Island and County of Hawaii; TMK: (3) 6-6-001:068

Dear Ms. Kapali:

Thank you for the opportunity to comment on the above project. The State of Hawaii Department of Defense has no comments to offer relative to the project.

If you have any questions or concerns, please have your staff contact Mr. Lloyd Maki, Assistant Chief Engineering Officer at (808) 733-4250.

Sincerely,

ARTHUR J. LOGAN
Major General
Hawaii National Guard
Adjutant General

c: Ms. Havinne Okamura, Hawaii Emergency Management Agency

PBR HAWAII
& ASSOCIATES, INC.

PRINCIPALS

THOMAS S. WITTEN, ASLA
Chairman

R. STAN DUNCAN, ASLA
President

RUSSELL Y. J. CHUNG, FASLA, LEED®AP BD+C
Executive Vice-President

VINCENT SHIGEKUNI
Vice-President

GRANT T. MURAKAMI, AICP, LEED®AP BD+C
Vice-President

TOM SCHNELL, AICP
Principal

W. FRANK BRANDT, FASLA
Chairman Emeritus

ASSOCIATES

RAYMOND T. HIGA, ASLA
Senior Associate

KIMI MIKAMI YUEN, LEED®AP BD+C
Senior Associate

SCOTT ALIKA ABRIGO, LEED®AP BD+C
Managing Director - Kapolei

ROY TAKEMOTO
Managing Director - Hilo

SCOTT MURAKAMI, ASLA, LEED®AP
Associate

DACHENG DONG, LEED®AP
Associate

MARC SHIMATSU, ASLA
Associate

CATIE CULLISON, AICP
Associate

HONOLULU OFFICE
1001 Bishop Street, Suite 650
Honolulu, Hawai'i 96813-3484
Tel: (808) 521-5631
Fax: (808) 523-1402
E-mail: sysadmin@pbrhawaii.com

KAPOLEI OFFICE
1001 Kamokila Boulevard
Kapolei Building, Suite 313
Kapolei, Hawai'i 96707-2005
Tel: (808) 521-5631
Fax: (808) 535-3163

HILO OFFICE
1719 Haleloke Street
Hilo, Hawai'i 96720-1553
Tel/Cel: (808) 315-6878

printed on recycled paper

November 6, 2015

Major General Arthur J. Logan
Department of Defense
State of Hawai‘i
3949 Diamond Head Road
Honolulu, Hawai‘i 96816-4495

Attn: Mr. Lloyd Maki

SUBJECT: PRE-ASSESSMENT CONSULTATION FOR THE PROPOSED IMPROVEMENTS AT LĀLĀMILO WELL A, LĀLĀMILO, SOUTH KOHALA DISTRICT, SIALND AND COUNTY OF HAWAI‘I, TMK (3)6-6-001:068

Dear Major General Logan,

Thank you for your letter dated August 28, 2015, regarding pre-consultation for the Lālāmilo Well A Improvements Draft Environmental Assessment (EA). As the planning consultant for the applicant, the County of Hawai‘i Department of Water Supply, we acknowledge that the Department of Defense has no comments to offer with regards to the proposed improvements at Lālāmilo Well A.

Thank you for your participation in the environmental review process. Your letter will be included in the Draft EA.

Sincerely,
PBR HAWAII

Keli‘i Kapali
Planner

cc: County of Hawai‘i Department of Water Supply

O:\Job30\3080.02 Lalamilo Well EA\EA\Pre-Consultation\Responses\DoD.docx

DAVID Y. IGE
GOVERNOR OF HAWAII

VIRGINIA PRESSLER, M.D.
DIRECTOR OF HEALTH

STATE OF HAWAII
DEPARTMENT OF HEALTH
P. O. BOX 3378
HONOLULU, HI 96801-3378

In reply, please refer to:
EMD/CWB

09026PCTM.15

September 10, 2015

Ms. Kelii Kapali
Senior Planner
PBR Hawaii & Associates, Inc.
1001 Bishop Street, Suite 650
Honolulu, Hawaii 96813

Dear Ms. Kapali:

SUBJECT: Comments on the Pre-Assessment Consultation for Proposed Improvements at Lalamilo Well A TMK (3) 6-6-001:068 Lalamilo, Island of Hawaii, Hawaii

The Department of Health (DOH), Clean Water Branch (CWB), acknowledges receipt of your letter, dated August 18, 2015, requesting comments on your project. The DOH-CWB has reviewed the subject document and offers these comments. Please note that our review is based solely on the information provided in the subject document and its compliance with the Hawaii Administrative Rules (HAR), Chapters 11-54 and 11-55. You may be responsible for fulfilling additional requirements related to our program. We recommend that you also read our standard comments on our website at: http://health.hawaii.gov/epo/files/2013/05/Clean-Water-Branch-Std-Comments.pdf

1. Any project and its potential impacts to State waters must meet the following criteria:

   a. Antidegradation policy (HAR, Section 11-54-1.1), which requires that the existing uses and the level of water quality necessary to protect the existing uses of the receiving State water be maintained and protected.

   b. Designated uses (HAR, Section 11-54-3), as determined by the classification of the receiving State waters.

   c. Water quality criteria (HAR, Sections 11-54-4 through 11-54-8).

2. You may be required to obtain National Pollutant Discharge Elimination System (NPDES) permit coverage for discharges of wastewater, including storm water runoff, into State surface waters (HAR, Chapter 11-55).

For NPDES general permit coverage, a Notice of Intent (NOI) form must be submitted at least 30 calendar days before the commencement of the discharge. An application for a NPDES individual permit must be submitted at least 180 calendar days before the commencement of the discharge. To request NPDES permit coverage, you must submit the applicable form ("CWB Individual NPDES Form" or "CWB NOI Form") through the e-Permitting Portal and the hard copy certification statement with the respective filing fee ($1,000 for an individual NPDES permit or $500 for a Notice of General Permit Coverage). Please open the e-Permitting Portal website located at: https://eha-cloud.doh.hawaii.gov/epermit/. You will be asked to do a one-time registration to obtain your login and password. After you register, click on the Application Finder tool and locate the appropriate form. Follow the instructions to complete and submit the form.

3. If your project involves work in, over, or under waters of the United States, it is highly recommended that you contact the Army Corp of Engineers, Regulatory Branch (Tel: 835-4303) regarding their permitting requirements.

   Pursuant to Federal Water Pollution Control Act [commonly known as the "Clean Water Act" (CWA)], Paragraph 401(a)(1), a Section 401 Water Quality Certification (WQC) is required for "[a]ny applicant for Federal license or permit to conduct any activity including, but not limited to, the construction or operation of facilities, which may **result** in any discharge into the navigable waters..." (emphasis added). The term "discharge" is defined in CWA, Subsections 502(16), 502(12), and 502(6); Title 40 of the Code of Federal Regulations, Section 122.2; and Hawaii Administrative Rules (HAR), Chapter 11-54.

4. Please note that all discharges related to the project construction or operation activities, whether or not NPDES permit coverage and/or Section 401 WQC are required, must comply with the State's Water Quality Standards. Noncompliance with water quality requirements contained in HAR, Chapter 11-54, and/or permitting requirements, specified in HAR, Chapter 11-55, may be subject to penalties of $25,000 per day per violation.

5. It is the State's position that all projects must reduce, reuse, and recycle to protect, restore, and sustain water quality and beneficial uses of State waters. Project planning should:

   a. Treat storm water as a resource to be protected by integrating it into project planning and permitting. Storm water has long been recognized as a source of irrigation that will not deplete potable water resources. What is often overlooked is that storm water recharges ground water supplies and feeds streams and estuaries; to ensure that these water cycles are not disrupted, storm water cannot be relegated as a waste product of impervious surfaces. Any project planning must recognize storm water as an asset that sustains and protects natural ecosystems and traditional beneficial uses of State waters, like community beautification, beach going, swimming, and fishing. The approaches necessary to do so, including low impact development methods or ecological

bio-engineering of drainage ways must be identified in the planning stages to allow designers opportunity to include those approaches up front, prior to seeking zoning, construction, or building permits.

b. Clearly articulate the State's position on water quality and the beneficial uses of State waters. The plan should include statements regarding the implementation of methods to conserve natural resources (e.g. minimizing potable water for irrigation, gray water re-use options, energy conservation through smart design) and improve water quality.

c. Consider storm water Best Management Practice (BMP) approaches that minimize the use of potable water for irrigation through storm water storage and reuse, percolate storm water to recharge groundwater to revitalize natural hydrology, and treat storm water which is to be discharged.

d. Consider the use of green building practices, such as pervious pavement and landscaping with native vegetation, to improve water quality by reducing excessive runoff and the need for excessive fertilization, respectively.

e. Identify opportunities for retrofitting or bio-engineering existing storm water infrastructure to restore ecological function while maintaining, or even enhancing, hydraulic capacity. Particular consideration should be given to areas prone to flooding, or where the infrastructure is aged and will need to be rehabilitated.

If you have any questions, please visit our website at:http://health.hawaii.gov/cwb/, or contact the Engineering Section, CWB, at (808) 586-4309.

Sincerely,

ALEC WONG, P.E., CHIEF
Clean Water Branch

CTM:bk

c: DOH-EPO #15-213 [via e-mail only]

PBR HAWAII
& ASSOCIATES, INC.

PRINCIPALS

THOMAS S. WITTEN, ASLA
Chairman

R. STAN DUNCAN, ASLA
President

RUSSELL Y. J. CHUNG, FASLA, LEED®AP BD+C
Executive Vice-President

VINCENT SHIGEKUNI
Vice-President

GRANT T. MURAKAMI, AICP, LEED®AP BD+C
Vice-President

TOM SCHNELL, AICP
Principal

W. FRANK BRANDT, FASLA
Chairman Emeritus

ASSOCIATES

RAYMOND T. HIGA, ASLA
Senior Associate

KIMI MIKAMI YUEN, LEED®AP BD+C
Senior Associate

SCOTT ALIKA ABRIGO, LEED®AP BD+C
Managing Director - Kapolei

ROY TAKEMOTO
Managing Director - Hilo

SCOTT MURAKAMI, ASLA, LEED®AP
Associate

DACHENG DONG, LEED®AP
Associate

MARC SHIMATSU, ASLA
Associate

CATIE CULLISON, AICP
Associate

HONOLULU OFFICE
1001 Bishop Street, Suite 650
Honolulu, Hawai'i 96813-3484
Tel: (808) 521-5631
Fax: (808) 523-1402
E-mail: sysadmin@pbrhawaii.com

KAPOLEI OFFICE
1001 Kamokila Boulevard
Kapolei Building, Suite 313
Kapolei, Hawai'i 96707-2005
Tel: (808) 521-5631
Fax: (808) 535-3163

HILO OFFICE
1719 Haleloke Street
Hilo, Hawai'i 96720-1553
Tel/Cel: (808) 315-6878

printed on recycled paper

November 6, 2015

Mr. Alec Wong, P.E., Chief
Clean Water Branch
Department of Health
State of Hawai'i
P.O. Box 3378
Honolulu, HI 96801-3378

SUBJECT: PRE-ASSESSMENT CONSULTATION FOR THE PROPOSED IMPROVEMENTS AT LĀLĀMILO WELL A, LĀLĀMILO, SOUTH KOHALA DISTRICT, SIALND AND COUNTY OF HAWAI'I, TMK (3)6-6-001:068

Dear Mr. Wong,

Thank you for your letter (09026PCTM.15) dated September 10, 2015, regarding pre-consultation for the Lālāmilo Well A Improvements Draft Environmental Assessment (EA). As the planning consultant for the applicant, the County of Hawai'i Department of Water Supply (DWS), we have reviewed your comment letter and offer the following responses.

1. The Draft EA will include a discussion of how the proposed project may comply with the following:
   a. Anti-degradation policy (Chapter 11-54-1.1, Hawaii Administrative Rules (HAR));
   b. Designated uses (Chapter 11-54-3, HAR); and
   c. Water quality criteria (Chapter 11.54-4 through 11-54-8, HAR).

2. DWS will obtain a National Pollutant Discharge Elimination System (NPDES) where necessary. We appreciate the information about NPDES deadlines, forms, and filing fees.

3. The project does not include work in, over, or under waters of the United States.

4. It is acknowledged that all discharges related to construction or operation of proposed improvements must be in compliance with the State's Water Quality Standards contained in HAR, Chapter 11-54 and 11-55.

5. It is acknowledged that it is the State's position that all projects must reduce, reuse and recycle to protect, restore, and sustain water quality and beneficial uses of State waters.

Thank you for your participation in the environmental review process. Your letter will be included in the Draft EA.

Sincerely,
PBR HAWAII

Keli'i Kapali
Planner

cc: County of Hawai'i Department of Water Supply

O:\Job30\3080.02 Lalamilo Well EA\EA\Pre-Consultation\Responses\DOH-CWB.docx

DAVID Y. IGE
GOVERNOR OF HAWAII

VIRGINIA PRESSLER, M.D.
DIRECTOR OF HEALTH

STATE OF HAWAII
DEPARTMENT OF HEALTH
P. O. BOX 3378
HONOLULU, HI 96801-3378

In reply, please refer to:
File:

EPO 15-213

August 28, 2015

Mr. Kelii Kapali
Senior Planner
PBR Hawaii & Associates, Inc.
1001 Bishop Street, Suite 650
Honolulu, Hawaii 96813

Dear Mr. Kapali:

SUBJECT: Pre-Assessment Consultation (PAC) for Proposed Improvements at Lalamilo Well A Lalamilo, South Kohala District, Island and County of Hawaii

The Department of Health (DOH), Environmental Planning Office (EPO), acknowledges receipt of your PAC to our office on August 25, 2015. Thank you for allowing us to review and comment on the proposed project. The PAC was routed to the District Health Office on Hawaii, Clean Water, and Safe Drinking Water Branches. They will provide specific comments to you if necessary. EPO recommends that you review the standard comments and available strategies to support sustainable and healthy design provided at: http://health.hawaii.gov/epo/landuse. Projects are required to adhere to all applicable standard comments.

EPO also encourages you to examine and utilize the Hawaii Environmental Health Portal. The portal provides links to our e-Permitting Portal, Environmental Health Warehouse, Groundwater Contamination Viewer, Hawaii Emergency Response Exchange, Hawaii State and Local Emission Inventory System, Water Pollution Control Viewer, Water Quality Data, Warnings, Advisories and Postings. The Portal is continually updated. Please visit it regularly at: https://eha-cloud.doh.hawaii.gov

We request that you utilize all of this information on your proposed project to increase sustainable, innovative, inspirational, transparent and healthy design.

Mahalo nui loa,

Laura Leialoha Phillips McIntyre, AICP
Program Manager, Environmental Planning Office

c: DHO Hawaii, CWB, & SDWB {via email only}

PBR HAWAII
& ASSOCIATES, INC.

PRINCIPALS

THOMAS S. WITTEN, ASLA
Chairman

R. STAN DUNCAN, ASLA
President

RUSSELL Y. J. CHUNG, FASLA, LEED®AP BD+C
Executive Vice-President

VINCENT SHIGEKUNI
Vice-President

GRANT T. MURAKAMI, AICP, LEED®AP BD+C
Vice-President

TOM SCHNELL, AICP
Principal

W. FRANK BRANDT, FASLA
Chairman Emeritus

ASSOCIATES

RAYMOND T. HIGA, ASLA
Senior Associate

KIMI MIKAMI YUEN, LEED®AP BD+C
Senior Associate

SCOTT ALIKA ABRIGO, LEED®AP BD+C
Managing Director - Kapolei

ROY TAKEMOTO
Managing Director - Hilo

SCOTT MURAKAMI, ASLA, LEED®AP
Associate

DACHENG DONG, LEED®AP
Associate

MARC SHIMATSU, ASLA
Associate

CATIE CULLISON, AICP
Associate

HONOLULU OFFICE
1001 Bishop Street, Suite 650
Honolulu, Hawai'i 96813-3484
Tel: (808) 521-5631
Fax: (808) 523-1402
E-mail: sysadmin@pbrhawaii.com

KAPOLEI OFFICE
1001 Kamokila Boulevard
Kapolei Building, Suite 313
Kapolei, Hawai'i 96707-2005
Tel: (808) 521-5631
Fax: (808) 535-3163

HILO OFFICE
1719 Haleloke Street
Hilo, Hawai'i 96720-1553
Tel/Cel: (808) 315-6878

printed on recycled paper

November 6, 2015

Ms. Laura Leialoha Phillips McIntyre, Program Manager
Environmental Planning Office
Department of Health
State of Hawai‘i
P.O. Box 3378
Honolulu, Hawai‘i 96801-3378

SUBJECT: PRE-ASSESSMENT CONSULTATION FOR THE PROPOSED IMPROVEMENTS AT LĀLĀMILO WELL A, LĀLĀMILO, SOUTH KOHALA DISTRICT, SIALND AND COUNTY OF HAWAI‘I, TMK (3)6-6-001:068

Dear Ms. Phillips McIntyre,

Thank you for your letter (EPO 15-213) dated August 28, 2015, regarding pre-consultation for the Lālāmilo Well A Improvements Draft Environmental Assessment (EA). As the planning consultant for the applicant, the County of Hawai‘i Department of Water Supply, we have reviewed DOH EPO's standard comments relating to the Environmental Health programs, and offer the following responses:

1. We have reviewed the standard comments and available strategies to support sustainable and healthy design, and we acknowledge that the proposed improvements are required to adhere to these comments.

2. We will review the Hawai‘i Environmental Health Portal and the Water Quality Standards Maps for information relevant to the Lālāmilo Well A improvements. The Draft EA will include any relevant information from these two sources.

3. We appreciate the references to the many sources available on strategies to support the sustainable design of buildings and communities.

Thank you for your participation in the environmental review process. Your letter will be included in the Draft EA.

Sincerely,
PBR HAWAII

Keli‘i Kapali
Planner

cc: County of Hawai‘i Department of Water Supply

O:\Job30\3080.02 Lalamilo Well EA\EA\Pre-Consultation\Responses\DOH.docx

DAVID Y. IGE
GOVERNOR

RACHAEL WONG, DrPH
DIRECTOR

PANKAJ BHANOT
DEPUTY DIRECTOR

STATE OF HAWAII
DEPARTMENT OF HUMAN SERVICES
Benefit, Employment & Support Services Division
820 Mililani Street, Suite 606
Honolulu, Hawaii 96813

August 26, 2015

PBR Hawaii and Associates, Inc.
Attn: Keli'I Kapali, Senior Planner
1001 Bishop Street, Suite 650
Honolulu, Hawaii 96813-3484

Dear Mr. Kapali:

Subject: Pre-Assessment Consultation for Proposed Improvements at Lalamilo Well A, Lalamilo, South Kohala District, Island and County of Hawaii

This is in response to your letter dated August 18, 2015 requesting the Department of Human Services (DHS) review the Pre-Assessment on the proposed infrastructure improvements to the Lalamilo Well A.

The DHS has reviewed the attached map as well as child care licensing records and there are no DHS licensed child care homes and facilities in the near vicinity.

If you have any questions or need further information, please contact Ms. Jill Arizumi, Child Care Program Specialist, at (808) 586-5240.

Sincerely,

Scott Nakasone
Assistant Division Administrator

PBR HAWAII
& ASSOCIATES, INC.

PRINCIPALS

THOMAS S. WITTEN, ASLA
Chairman

R. STAN DUNCAN, ASLA
President

RUSSELL Y. J. CHUNG, FASLA, LEED®AP BD+C
Executive Vice-President

VINCENT SHIGEKUNI
Vice-President

GRANT T. MURAKAMI, AICP, LEED®AP BD+C
Vice-President

TOM SCHNELL, AICP
Principal

W. FRANK BRANDT, FASLA
Chairman Emeritus

ASSOCIATES

RAYMOND T. HIGA, ASLA
Senior Associate

KIMI MIKAMI YUEN, LEED®AP BD+C
Senior Associate

SCOTT ALIKA ABRIGO, LEED®AP BD+C
Managing Director - Kapolei

ROY TAKEMOTO
Managing Director - Hilo

SCOTT MURAKAMI, ASLA, LEED®AP
Associate

DACHENG DONG, LEED®AP
Associate

MARC SHIMATSU, ASLA
Associate

CATIE CULLISON, AICP
Associate

HONOLULU OFFICE
1001 Bishop Street, Suite 650
Honolulu, Hawai'i 96813-3484
Tel: (808) 521-5631
Fax: (808) 523-1402
E-mail: sysadmin@pbrhawaii.com

KAPOLEI OFFICE
1001 Kamokila Boulevard
Kapolei Building, Suite 313
Kapolei, Hawai'i 96707-2005
Tel: (808) 521-5631
Fax: (808) 535-3163

HILO OFFICE
1719 Haleloke Street
Hilo, Hawai'i 96720-1553
Tel/Cel: (808) 315-6878

printed on recycled paper

November 6, 2015

Mr. Scott Nakasone
Assistant Division Administrator
Department of Human Services
State of Hawai‘i
Queen Liliuokalani Building
820 Mililani Street, Suite 606
Honolulu, Hawai‘i 96813

Attention: Ms. Jill Arizumi

SUBJECT: PRE-ASSESSMENT CONSULTATION FOR THE PROPOSED IMPROVEMENTS AT LĀLĀMILO WELL A, LĀLĀMILO, SOUTH KOHALA DISTRICT, SIALND AND COUNTY OF HAWAI‘I, TMK (3)6-6-001:068

Dear Mr, Nakasone,

Thank you for your letter dated August 26, 2015, regarding pre-consultation for the Lālāmilo Well A Improvements Draft Environmental Assessment (EA). As the planning consultant for the applicant, the County of Hawai‘i Department of Water Supply, we acknowledge the Department of Human Services' (DHS) determination that no DHS licensed child care homes and facilities are in the near vicinity of the proposed improvements at Lālāmilo Well A.

Thank you for your participation in the environmental review process. Your letter will be included in the Draft EA.

Sincerely,
PBR HAWAII

Keli‘i Kapali
Planner

cc: County of Hawai‘i Department of Water Supply

O:\Job30\3080.02 Lalamilo Well EA\EA\Pre-Consultation\Responses\DHS.docx

DAVID Y. IGE
GOVERNOR OF HAWAII

SUZANNE D. CASE
CHAIRPERSON
BOARD OF LAND AND NATURAL RESOURCES
COMMISSION ON WATER RESOURCE
MANAGEMENT

STATE OF HAWAII
DEPARTMENT OF LAND AND NATURAL RESOURCES
LAND DIVISION

POST OFFICE BOX 621
HONOLULU, HAWAII 96809

September 16, 2015

PBR HAWAII & Associates, Inc.
Attention: Mr. Keli'i Kapali
1001 Bishop Street, Suite 650
Honolulu, Hawaii 96813-3484

via kkapali@pbrhawaii.com

Dear Mr. Kapali:

SUBJECT: Pre-Assessment Consultation for Proposed Improvements at Lalamilo Well A

Thank you for the opportunity to review and comment on the subject matter. The Department of Land and Natural Resources' (DLNR) Land Division distributed or made available a copy of your report pertaining to the subject matter to DLNR Divisions for their review and comments.

At this time, enclosed are comments from the (a) Engineering Division and (b) Land Division – Hawaii District on the subject matter. Should you have any questions, please feel free to call Lydia Morikawa at 587-0410. Thank you.

Sincerely,

Russell Y. Tsuji
Land Administrator

Enclosure(s)
cc: Central Files

DAVID Y. IGE
GOVERNOR OF HAWAII

SUZANNE D. CASE
CHAIRPERSON
BOARD OF LAND AND NATURAL RESOURCES
COMMISSION ON WATER RESOURCE MANAGEMENT

STATE OF HAWAII
DEPARTMENT OF LAND AND NATURAL RESOURCES
LAND DIVISION

POST OFFICE BOX 621
HONOLULU, HAWAII 96809

'15 AUG 25 AM 10:55 ENGINEERING

RECEIVED
LAND DIVISION
2015 SEP 11 AM 11:19
DEPT. OF LAND & NATURAL RESOURCES
STATE OF HAWAII

August 24, 2015

MEMORANDUM

TO: PR'.

DLNR Agencies:
__Div. of Aquatic Resources
__Div. of Boating & Ocean Recreation
X Engineering Division
__Div. of Forestry & Wildlife
__Div. of State Parks
X Commission on Water Resource Management
__Office of Conservation & Coastal Lands
X Land Division – Hawaii District
X Historic Preservation

FROM: Russell Y. Tsuji, Land Administrator
SUBJECT: Pre-Assessment Consultation for Proposed Improvements at Lalamilo Well A
LOCATION: Lalamilo, South Kohala, Hawaii; TMK: (3) 6-6-001:068
APPLICANT: PBR Hawaii & Associates, Inc. for the County of Hawaii, Department of Water Supply

Transmitted for your review and comment is information on the above-referenced project. We would appreciate your comments on this project. Please submit any comments by September 15, 2015.

If no response is received by this date, we will assume your agency has no comments. If you have any questions about this request, please contact Kevin Moore at 587-0426. Thank you.

( ) We have no objections.
( ) We have no comments.
(✓) Comments are attached.

Signed: _____

Print name: Carty S. Chang, Chief Engineer
Date: 9/9/15

cc: Central Files

DEPARTMENT OF LAND AND NATURAL RESOURCES
ENGINEERING DIVISION

LD/ Russell Y. Tsuji
Ref.: Pre-Assessment Consultation for Proposed Improvements at Lalamilo Well A
Hawaii.051

COMMENTS

( ) We confirm that the project site, according to the Flood Insurance Rate Map (FIRM), is located in Flood Zone ___.

(X) **Please take note that the project site, according to the Flood Insurance Rate Map (FIRM), is located in Zone X. The National Flood Insurance Program (NFIP) does not regulate developments within Zone X.**

( ) Please note that the correct Flood Zone Designation for the project site according to the Flood Insurance Rate Map (FIRM) is ___.

( ) Please note that the project site must comply with the rules and regulations of the National Flood Insurance Program (NFIP) presented in Title 44 of the Code of Federal Regulations (44CFR), whenever development within a Special Flood Hazard Area is undertaken. If there are any questions, please contact the State NFIP Coordinator, Ms. Carol Tyau-Beam, of the Department of Land and Natural Resources, Engineering Division at (808) 587-0267.

Please be advised that 44CFR indicates the minimum standards set forth by the NFIP. Your Community's local flood ordinance may prove to be more restrictive and thus take precedence over the minimum NFIP standards. If there are questions regarding the local flood ordinances, please contact the applicable County NFIP Coordinators below:

( ) Mr. Mario Siu Li at (808) 768-8098 of the City and County of Honolulu, Department of Planning and Permitting.

( ) Mr. Carter Romero (Acting) at (808) 961-8943 of the County of Hawaii, Department of Public Works.

( ) Mr. Carolyn Cortez at (808) 270-7253 of the County of Maui, Department of Planning.

( ) Mr. Stanford Iwamoto at (808) 241-4896 of the County of Kauai, Department of Public Works.

( ) The applicant should include project water demands and infrastructure required to meet water demands. Please note that the implementation of any State-sponsored projects requiring water service from the Honolulu Board of Water Supply system must first obtain water allocation credits from the Engineering Division before it can receive a building permit and/or water meter.

( ) The applicant should provide the water demands and calculations to the Engineering Division so it can be included in the State Water Projects Plan Update.

( ) Additional Comments: _____

( ) Other: _____

Should you have any questions, please call Mr. Dennis Imada of the Planning Branch at 587-0257.

Signed: _____
CARTY S. CHANG, CHIEF ENGINEER

Date: 9/9/15

State of Hawaii

FLOOD HAZARD ASSESSMENT REPORT

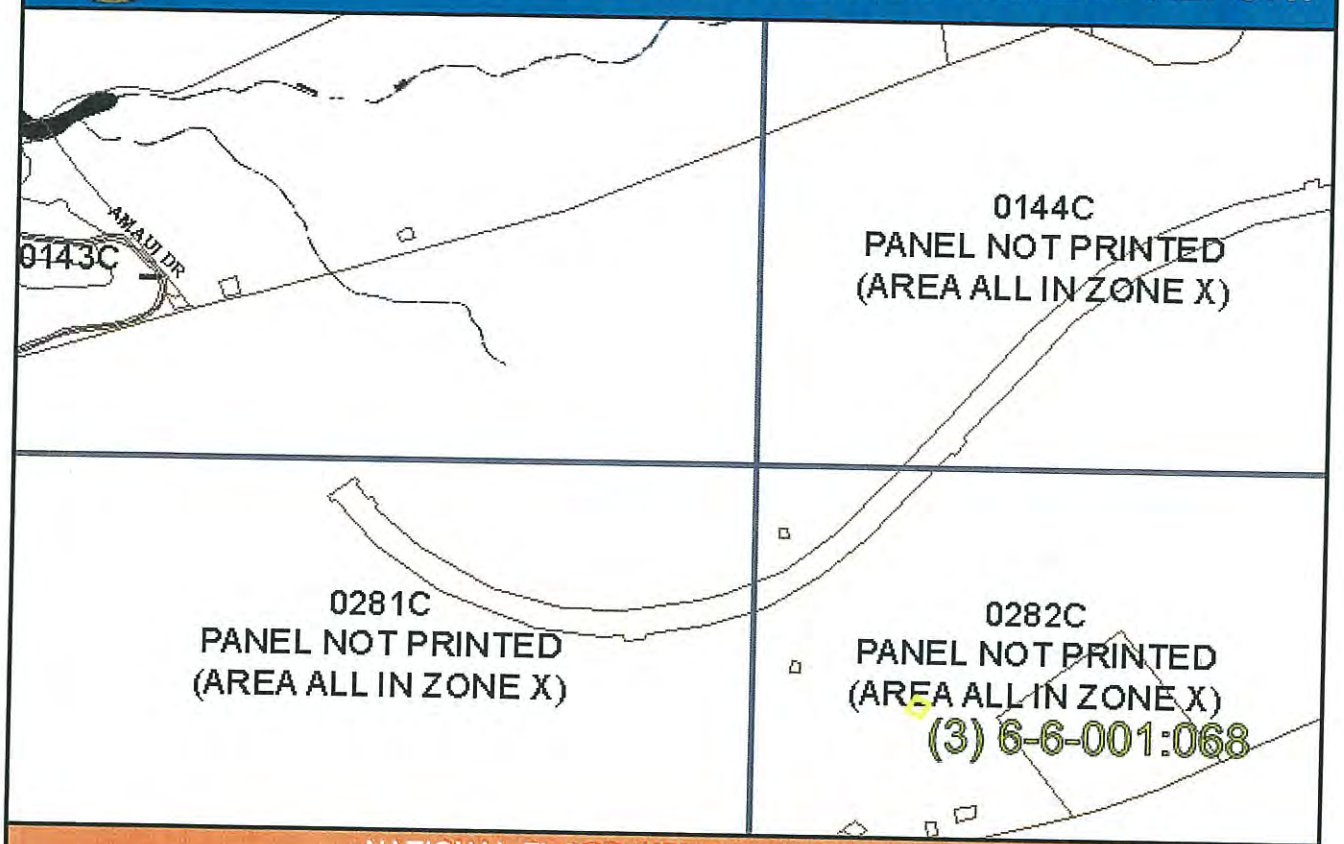

NATIONAL FLOOD INSURANCE PROGRAM

FLOOD ZONE DEFINITIONS

SPECIAL FLOOD HAZARD AREAS SUBJECT TO INUNDATION BY THE 1% ANNUAL CHANCE FLOOD – The 1% annual chance flood (100-year flood), also known as the base flood, is the flood that has a 1% chance of being equaled or exceeded in any given year. The Special Flood Hazard is the area subject to flooding by the 1% annual chance flood. Areas of Special Flood Hazard include Zone A, AE, AH, AO, V, and VE. The Base Flood Elevation (BFE) is the water-surface elevation of the 1% annual chance flood. Mandatory flood insurance purchase applies in these zones:

- **Zone A:** No BFE determined.
- **Zone AE:** BFE determined.
- **Zone AH:** Flood depths of 1 to 3 feet (usually areas of ponding); BFE determined.
- **Zone AO:** Flood depths of 1 to 3 feet (usually sheet flow on sloping terrain); average depths determined.
- **Zone V:** Coastal flood zone with velocity hazard (wave action); no BFE determined.
- **Zone VE:** Coastal flood zone with velocity hazard (wave action); BFE determined.
- **Zone AEF:** Floodway areas in Zone AE. The floodway is the channel of stream plus any adjacent floodplain areas that must be kept free of encroachment so that the 1% annual chance flood can be carried without increasing the BFE.

NON-SPECIAL FLOOD HAZARD AREA – An area in a low-to-moderate risk flood zone. No mandatory flood insurance purchase requirements apply, but coverage is available in participating communities.

- **Zone XS (X shaded):** Areas of 0.2% annual chance flood; areas of 1% annual chance flood with average depths of less than 1 foot or with drainage areas less than 1 square mile; and areas protected by levees from 1% annual chance flood.
- **Zone X:** Areas determined to be outside the 0.2% annual chance floodplain.

OTHER FLOOD AREAS

- **Zone D:** Unstudied areas where flood hazards are undetermined, but flooding is possible. No mandatory flood insurance purchase requirements apply, but coverage is available in participating communities.

PROPERTY INFORMATION

COUNTY:	HAWAII
TMK NO:	(3) 6-6-001-068
PARCEL ADDRESS:	
FIRM INDEX DATE:	APRIL 02, 2004
LETTER OF MAP CHANGE(S):	NONE
FEMA FIRM PANEL(S):	1551660282C
PANEL EFFECTIVE DATE:	PANEL NOT PRINTED

PARCEL DATA FROM:	JUNE 2013
IMAGERY DATA FROM:	MAY 2005

IMPORTANT PHONE NUMBERS

County NFIP Coordinator	
County of Hawaii	
Carter Romero, P.E., CFM	(808) 961-8943
State NFIP Coordinator	
Carol Tyau-Beam, P.E., CFM	(808) 587-0267

Disclaimer: The Hawaii Department of Land and Natural Resources (DLNR) assumes no responsibility arising from the use, accuracy, completeness, and timeliness of any information contained in this report. Viewers/Users are responsible for verifying the accuracy of the information and agree to indemnify the DLNR, its officers, and employees from any liability which may arise from its use of its data or information.

If this map has been identified as 'PRELIMINARY', please note that it is being provided for informational purposes and shall not be used for flood insurance rating. Contact your county floodplain manager for flood zone determinations to be used for compliance with local floodplain management regulations.

DAVID Y. IGE
GOVERNOR OF HAWAII

SUZANNE D. CASE
CHAIRPERSON
BOARD OF LAND AND NATURAL RESOURCES
COMMISSION ON WATER RESOURCE MANAGEMENT

STATE OF HAWAII
DEPARTMENT OF LAND AND NATURAL RESOURCES
LAND DIVISION

POST OFFICE BOX 621
HONOLULU, HAWAII 96809

2015 AUG 26 A 10:00
RECEIVED
LAND DIVISION
HILO, HAWAII

August 24, 2015

2015 SEP 10 AM 11:09
RECEIVED
DEPT. OF LAND & NATURAL RESOURCES
STATE OF HAWAII
LAND DIVISION

MEMORANDUM

TO: **DLNR Agencies:**
__Div. of Aquatic Resources
__Div. of Boating & Ocean Recreation
X Engineering Division
__Div. of Forestry & Wildlife
__Div. of State Parks
X Commission on Water Resource Management
__Office of Conservation & Coastal Lands
X Land Division – Hawaii District
X Historic Preservation

FROM: for Russell Y. Tsuji, Land Administrator
SUBJECT: Pre-Assessment Consultation for Proposed Improvements at Lalamilo Well A
LOCATION: Lalamilo, South Kohala, Hawaii; TMK: (3) 6-6-001:068
APPLICANT: PBR Hawaii & Associates, Inc. for the County of Hawaii, Department of Water Supply

Transmitted for your review and comment is information on the above-referenced project. We would appreciate your comments on this project. Please submit any comments by September 15, 2015.

If no response is received by this date, we will assume your agency has no comments. If you have any questions about this request, please contact Kevin Moore at 587-0426. Thank you.

( ) We have no objections.
(✓) We have no comments.
( ) Comments are attached.

Signed: _____

Print name: GORDON C. HEIT
Date: 9/8/15

cc: Central Files

PBR HAWAII
& ASSOCIATES, INC.

PRINCIPALS

THOMAS S. WITTEN, ASLA
Chairman

R. STAN DUNCAN, ASLA
President

RUSSELL Y. J. CHUNG, FASLA, LEED®AP BD+C
Executive Vice-President

VINCENT SHIGEKUNI
Vice-President

GRANT T. MURAKAMI, AICP, LEED®AP BD+C
Vice-President

TOM SCHNELL, AICP
Principal

W. FRANK BRANDT, FASLA
Chairman Emeritus

ASSOCIATES

RAYMOND T. HIGA, ASLA
Senior Associate

KIMI MIKAMI YUEN, LEED®AP BD+C
Senior Associate

SCOTT ALIKA ABRIGO, LEED®AP BD+C
Managing Director - Kapolei

ROY TAKEMOTO
Managing Director - Hilo

SCOTT MURAKAMI, ASLA, LEED®AP
Associate

DACHENG DONG, LEED®AP
Associate

MARC SHIMATSU, ASLA
Associate

CATIE CULLISON, AICP
Associate

HONOLULU OFFICE
1001 Bishop Street, Suite 650
Honolulu, Hawai'i 96813-3484
Tel: (808) 521-5631
Fax: (808) 523-1402
E-mail: sysadmin@pbrhawaii.com

KAPOLEI OFFICE
1001 Kamokila Boulevard
Kapolei Building, Suite 313
Kapolei, Hawai'i 96707-2005
Tel: (808) 521-5631
Fax: (808) 535-3163

HILO OFFICE
1719 Haleloke Street
Hilo, Hawai'i 96720-1553
Tel/Cel: (808) 315-6878

printed on recycled paper

November 6, 2015

Mr. Russell Y. Tsuji, Land Administrator
Land Division
Department of Land and Natural Resources
State of Hawai‘i
P.O. Box 621
Honolulu, Hawai‘i 96809

Attn: Ms. Lydia Morikawa

SUBJECT: PRE-ASSESSMENT CONSULTATION FOR THE PROPOSED IMPROVEMENTS AT LĀLĀMILO WELL A, LĀLĀMILO, SOUTH KOHALA DISTRICT, SIALND AND COUNTY OF HAWAI‘I, TMK (3)6-6-001:068

Dear Mr. Tsuji,

Thank you for your letter dated September 16, 2015, regarding pre-consultation for the Lālāmilo Well A Improvements Draft Environmental Assessment (EA). As the planning consultant for the applicant, the County of Hawai‘i Department of Water Supply, we have reviewed DLNR's letters and offer the following response.

1. **Land Division – Hawaii District.** We acknowledge that the Land Division – Hawaii District has no comments.

2. **Engineering Division.** We appreciate information provided by the Engineering Division that the Lālāmilo Well A Improvement project site is located in Zones X according to the Flood Insurance Rate Map. We note your comment that developments within Zone X are not regulated by the National Flood Insurance Program.

Thank you for your participation in the environmental review process. Your letter will be included in the Draft EA.

Sincerely,
PBR HAWAII

Keli‘i Kapali
Planner

cc: County of Hawai‘i Department of Water Supply

O:\Job30\3080.02 Lalamilo Well EA\EA\Pre-Consultation\Responses\DLNR.docx

DAVID Y. IGE
GOVERNOR

FORD N. FUCHIGAMI
DIRECTOR

Deputy Directors
JADE T. BUTAY
ROSS M. HIGASHI
EDWIN H. SNIFFEN
DARRELL T. YOUNG

STATE OF HAWAII
DEPARTMENT OF TRANSPORTATION
869 PUNCHBOWL STREET
HONOLULU, HAWAII 96813-5097

IN REPLY REFER TO:
STP 8.1855

September 8, 2015

Ms. Keli'i Kapali
Senior Planner
PBR Hawaii & Associates, Inc.
1001 Bishop Street, Suite 650
Honolulu, Hawaii 96813-3484

Dear Ms. Kapali:

Subject: Proposed Improvements at Lalamilo Well A
Pre-Assessment Consultation for an Environmental Assessment
South Kohala, Hawaii
TMK: (3) 6-6-001:068

The subject project is not expected to significantly impact the State highway facility. However, a permit from DOT Highways Division, Hawaii District Office is required for the transport of oversized and/or overweight materials and equipment on State highway facilities.

If there are any questions, please contact Mr. Norren Kato of the DOT Statewide Transportation Planning Office at telephone number (808) 831-7976.

Sincerely,

FORD N. FUCHIGAMI
Director of Transportation

PBR HAWAII
& ASSOCIATES, INC.

PRINCIPALS

THOMAS S. WITTEN, ASLA
Chairman

R. STAN DUNCAN, ASLA
President

RUSSELL Y. J. CHUNG, FASLA, LEED®AP BD+C
Executive Vice-President

VINCENT SHIGEKUNI
Vice-President

GRANT T. MURAKAMI, AICP, LEED®AP BD+C
Vice-President

TOM SCHNELL, AICP
Principal

W. FRANK BRANDT, FASLA
Chairman Emeritus

ASSOCIATES

RAYMOND T. HIGA, ASLA
Senior Associate

KIMI MIKAMI YUEN, LEED®AP BD+C
Senior Associate

SCOTT ALIKA ABRIGO, LEED®AP BD+C
Managing Director - Kapolei

ROY TAKEMOTO
Managing Director - Hilo

SCOTT MURAKAMI, ASLA, LEED®AP
Associate

DACHENG DONG, LEED®AP
Associate

MARC SHIMATSU, ASLA
Associate

CATIE CULLISON, AICP
Associate

November 6, 2015

Mr. Ford N. Fuchigami, Director
Department of Transportation
State of Hawai‘i
869 Punchbowl Street
Honolulu, HI 96813-5097

Attention: Mr. Norren Kato

SUBJECT: PRE-ASSESSMENT CONSULTATION FOR THE PROPOSED IMPROVEMENTS AT LĀLĀMILO WELL A, LĀLĀMILO, SOUTH KOHALA DISTRICT, SIALND AND COUNTY OF HAWAI‘I, TMK (3)6-6-001:068

Dear Mr. Fuchigami,

Thank you for your letter (STP 8.1855) dated September 8, 2015, regarding pre-consultation for the Lālāmilo Well A Improvements Draft Environmental Assessment (EA). As the planning consultant for the applicant, the County of Hawai‘i Department of Water Supply, we note the Department of Transportation's (DOT) determination that the proposed improvements at Lālāmilo Well A are not expected to significantly impact the State highway facility. Further, should the project require transport of oversized and/or overweight materials and equipment on State highway facilities, the applicant will apply for a permit from DOT Highways Division, Hawaii District Office.

Thank you for your participation in the environmental review process. Your letter will be included in the Draft EA.

Sincerely,
PBR HAWAII

Keli‘i Kapali
Planner

cc: County of Hawai‘i Department of Water Supply

O:\Job30\3080.02 Lalamilo Well EA\EA\Pre-Consultation\Responses\DOT.docx

HONOLULU OFFICE
1001 Bishop Street, Suite 650
Honolulu, Hawai‘i 96813-3484
Tel: (808) 521-5631
Fax: (808) 523-1402
E-mail: sysadmin@pbrhawaii.com

KAPOLEI OFFICE
1001 Kamokila Boulevard
Kapolei Building, Suite 313
Kapolei, Hawai‘i 96707-2005
Tel: (808) 521-5631
Fax: (808) 535-3163

HILO OFFICE
1719 Haleloke Street
Hilo, Hawai‘i 96720-1553
Tel/Cel: (808) 315-6878

printed on recycled paper

PHONE (808) 594-1888

FAX (808) 594-1938

STATE OF HAWAI'I
OFFICE OF HAWAIIAN AFFAIRS
560 N. NIMITZ HWY., SUITE 200
HONOLULU, HAWAI'I 96817

HRD15/7585

September 9, 2015

Keli'i Kapali, Senior Planner
PBR Hawaii & Associates, Inc.
1001 Bishop St., Suite 650
Honolulu, HI 96813

Re: Request for Pre-Assessment Consultation for Proposed Improvements at Lālāmilo Well A, South Kohala
Lālāmilo Keanu'i'omanō Ahupua'a, Kohala Moku, Hawai'i Mokupuni
Tax map key (3) 6-6-001:068

Aloha Ms. Kapali:

The Office of Hawaiian Affairs (OHA) is in receipt of your August 18, 2015 letter requesting pre-assessment consultation for the proposed improvements at Lālāmilo Well A (Well). PBR Hawaii & Associates, Inc. (PBR Hawaii) is acting on behalf of the County of Hawai'i Department of Water Supply.

The Well is part of the County of Hawai'i Lālāmilo Water System which services the South Kohala coastal region. The improvements are being proposed to meet the anticipated future water demand for the area. The project entails the upsizing of the well pump, the associated pipe upgrades, and a new control building.

OHA would like to suggest that the following entities and individuals be contacted:

- The Waimea Hawaiian Civic Club
  - Luna Hauanio
    - waimeahawaiiancivicclub2014@gmail.com
- The South Kohala Hawaiian Civic Club
  - Kaena Peterson, President
    - kaenap@yahoo.com

- The Association of Hawaiian Civic Clubs – Hawai'i Council Moku O Keawe
  - Geraldine Bell
    - djgm1@hawaii.rr.com
- The Kailapa Hawaiian Homestead Association
  - Diane Kanealii
    - dkanealii02@gmail.com

We look forward to participating in the consultation process for the Archeological Inventory Survey, as well as the opportunity to review the completed draft EA.

Mahalo for the opportunity to consult. Should you have any questions, please contact Jeannin Jeremiah at 594-1790 or by email at jeanninj@oha.org.

'O wau iho nō me ka 'oia 'i'o,

Kamana'opono M. Crabbe, Ph.D.
Ka Pouhana, Chief Executive Officer

KC:jj

C: Shane Palacat-Nelsen - OHA Community Outreach Coordinator, West Hawai'i Island

**Please address replies and similar, future correspondence to our agency:*
Dr. Kamana'opono Crabbe
Attn: OHA Compliance Enforcement
560 N. Nimitz Hwy, Ste. 200
Honolulu, HI 96817

PBR HAWAII
& ASSOCIATES, INC.

PRINCIPALS

THOMAS S. WITTEN, ASLA
Chairman

R. STAN DUNCAN, ASLA
President

RUSSELL Y. J. CHUNG, FASLA, LEED®AP BD+C
Executive Vice-President

VINCENT SHIGEKUNI
Vice-President

GRANT T. MURAKAMI, AICP, LEED®AP BD+C
Vice-President

TOM SCHNELL, AICP
Principal

W. FRANK BRANDT, FASLA
Chairman Emeritus

ASSOCIATES

RAYMOND T. HIGA, ASLA
Senior Associate

KIMI MIKAMI YUEN, LEED®AP BD+C
Senior Associate

SCOTT ALIKA ABRIGO, LEED®AP BD+C
Managing Director - Kapolei

ROY TAKEMOTO
Managing Director - Hilo

SCOTT MURAKAMI, ASLA, LEED®AP
Associate

DACHENG DONG, LEED®AP
Associate

MARC SHIMATSU, ASLA
Associate

CATIE CULLISON, AICP
Associate

HONOLULU OFFICE
1001 Bishop Street, Suite 650
Honolulu, Hawai'i 96813-3484
Tel: (808) 521-5631
Fax: (808) 523-1402
E-mail: sysadmin@pbrhawaii.com

KAPOLEI OFFICE
1001 Kamokila Boulevard
Kapolei Building, Suite 313
Kapolei, Hawai'i 96707-2005
Tel: (808) 521-5631
Fax: (808) 535-3163

HILO OFFICE
1719 Haleloke Street
Hilo, Hawai'i 96720-1553
Tel/Cel: (808) 315-6878

printed on recycled paper

November 6, 2015

Dr. Kamana'opono Crabbe
Attn: OHA Compliance Enforcement
560 N. Nimitz Highway, Suite 200
Honolulu, Hawai‘i 96817

SUBJECT: PRE-ASSESSMENT CONSULTATION FOR THE PROPOSED IMPROVEMENTS AT LALAMILO WELL A, LALAMILO, SOUTH KOHALA DISTRICT, SIALND AND COUNTY OF HAWAI‘I, TMK (3)6-6-001:068

Dear Dr. Crabbe,

Thank you for your letter (HRD15/7585) dated September 9, 2015, regarding pre-consultation for the Lālāmilo Well A Improvements Draft Environmental Assessment (EA). As the planning consultant for the applicant, the County of Hawai‘i Department of Water Supply, we acknowledge the Office of Hawaiian Affairs (OHA) looks forward to participating in: 1) the consultation process for any future archeological studies for the project site; and 2) review of the Draft EA.

Further, that OHA has suggested four additional organizations be contacted with regard to the proposed improvements at Lālāmilo Well A. Thus, letters have been sent to the Association of Hawaiian Civic Clubs-Hawai'i Council Moku O Keawe, Waimea Hawaiian Civic Club, South Kohala Hawaiian Civic Club, and Kailapa Hawaiian Homestead Association to inform them about the project and to solicit their comments.

Thank you for your participation in the environmental review process. Your letter will be included in the Draft EA.

Sincerely,
PBR HAWAII

Keli‘i Kapali
Planner

cc: County of Hawai‘i Department of Water Supply

O:\Job30\3080.02 Lalamilo Well EA\EA\Pre-Consultation\Responses\OHA.docx

From: Dionne Talia
To: Keli'i Kapali; Tom Schnell
Subject: FW: Comments on POH-2015-00164 Lalamilo Well A Improvements, Lalamilo, Kohala, Island of Hawaii, Hawaii (UNCLASSIFIED)
Date: Monday, September 14, 2015 11:15:07 AM

-----Original Message-----
From: Paahana, Jessie K POH [mailto:Jessie.K.Paahana@usace.army.mil]
Sent: Monday, September 14, 2015 10:04 AM
To: sysadmin <sysadmin@pbrhawaii.com>
Subject: Comments on POH-2015-00164 Lalamilo Well A Improvements, Lalamilo, Kohala, Island of Hawaii, Hawaii (UNCLASSIFIED)

Classification: UNCLASSIFIED
Caveats: NONE

Aloha, Kelii Kapali:

The Honolulu District, U.S. Army Corps of Engineers (Corps) has received your letter dated August 18, 2015 requesting comments on the proposed improvement at Lalamilo Well A, Lalamilo, Kohala, Island of Hawaii, Hawaii. We have assigned your project Department of the Army file no. POH-2015-00164. Please reference this number in all future correspondence with this office regarding your project.

For your information, in accordance with Section 10 of the Rivers & Harbors Act a Department of the Army permit is required prior to conducting any work activity in a navigable water of the U.S. In addition, in accordance with Section 404 of the Clean Water Act, a DA permit is required prior to discharging or placing dredged or fill material into a water of the U.S. including adjacent wetlands.

We are unable to determine from the limited information you have provided whether or not your proposed work may impact a water of the U.S. and require a DA permit. We recommend you visit our website at poh.usace.army.mil/missions/regulatory.aspx for more information on the Regulatory program especially the type of activities that require a permit and those that do not.

You may request to schedule a pre-application consultation meeting with our office via email at:
CEPOH-RO@usace.army.mil
or by phone at:
808-835-4107
or via mail at:
Honolulu District, U.S. Army Corps of Engineers
Regulatory Office Bldg. 230
Attention: Michelle Lynch, Chief
Fort Shafter, Hawaii 96858-5440

Thank you for contacting this office. We are unable to provide comments at this time. With more detailed information regarding the project scope and location, we can provide you a jurisdictional determination or decision of permitting requirements for the proposed well improvements.

Mahalo,
Jessie

Jessie K Paahana, Biologist
Honolulu District, US Army Corps of Engineers

Regulatory Office
Building 230
Fort Shafter, Hawaii 96858-5440
ph: 808.835.4107

For more information regarding the Regulatory Program at the Honolulu District, please visit our website at http://www.poh.usace.army.mil/Missions/Regulatory.aspx. Please direct all general inquiries to the Regulatory Office central email account at CEPOH-RO@usace.army.mil or via phone at (808) 835-4303.

You are encouraged to provide comments on your experience with the Honolulu District Regulatory Office by accessing our web-based customer survey form at http://corpsmapu.usace.army.mil/cm_apex/f?p=136:4:0.

Classification: UNCLASSIFIED
Caveats: NONE

PBR HAWAII
& ASSOCIATES, INC.

PRINCIPALS

THOMAS S. WITTEN, ASLA
Chairman

R. STAN DUNCAN, ASLA
President

RUSSELL Y. J. CHUNG, FASLA, LEED®AP BD+C
Executive Vice-President

VINCENT SHIGEKUNI
Vice-President

GRANT T. MURAKAMI, AICP, LEED®AP BD+C
Vice-President

TOM SCHNELL, AICP
Principal

W. FRANK BRANDT, FASLA
Chairman Emeritus

ASSOCIATES

RAYMOND T. HIGA, ASLA
Senior Associate

KIMI MIKAMI YUEN, LEED®AP BD+C
Senior Associate

SCOTT ALIKA ABRIGO, LEED®AP BD+C
Managing Director - Kapolei

ROY TAKEMOTO
Managing Director - Hilo

SCOTT MURAKAMI, ASLA, LEED®AP
Associate

DACHENG DONG, LEED®AP
Associate

MARC SHIMATSU, ASLA
Associate

CATIE CULLISON, AICP
Associate

HONOLULU OFFICE
1001 Bishop Street, Suite 650
Honolulu, Hawai'i 96813-3484
Tel: (808) 521-5631
Fax: (808) 523-1402
E-mail: sysadmin@pbrhawaii.com

KAPOLEI OFFICE
1001 Kamokila Boulevard
Kapolei Building, Suite 313
Kapolei, Hawai'i 96707-2005
Tel: (808) 521-5631
Fax: (808) 535-3163

HILO OFFICE
1719 Haleloke Street
Hilo, Hawai'i 96720-1553
Tel/Cel: (808) 315-6878

printed on recycled paper

November 6, 2015

Jessica K. Pa'ahana, Biologist
Honolulu District
U.S. Army Corps of Engineers
Regulatory Office Bldg. 230
Fort Shafter, Hawai‘i 96858-5440

Attention: Michelle Lynch, Chief

SUBJECT: PRE-ASSESSMENT CONSULTATION FOR THE PROPOSED IMPROVEMENTS AT LĀLĀMILO WELL A, LĀLĀMILO, SOUTH KOHALA DISTRICT, SIALND AND COUNTY OF HAWAI‘I, TMK (3)6-6-001:068

Dear Ms. Pa'ahana,

Thank you for your email (Department of the Army file no. POH-2015-00164) dated September 14, 2015, regarding pre-consultation for the Lālāmilo Well A Improvements Draft Environmental Assessment (EA). As the planning consultant for the applicant, the County of Hawai‘i Department of Water Supply, we noted your reference to pertinent statutes that regulate discharge of pollutants into waters of the U.S. and quality standards for surface waters. Based on the available information, we recognize the U.S. Army Corps of Engineers is unable to determine whether or not the proposed improvements at Lālāmilo Well A may impact a water of the U.S. and require a Department of Army (DA) Permit. We acknowledge that although no work in waterways are proposed and there will be no point source of pollution to nearby streams, a National Pollutant Discharge Elimination System (NPDES) permit may be required should there be in excess of one acre of land disturbance for the project in its entirety. The Draft EA will include relevant discussion of any impacts that would require a NPDES permit.

Thank you for your participation in the environmental review process. Your letter will be included in the Draft EA.

Sincerely,
PBR HAWAII

Keli‘i Kapali
Planner

cc: County of Hawai‘i Department of Water Supply

O:\Job30\3080.02 Lalamilo Well EA\EA\Pre-Consultation\Responses\USACE.docx

William P. Kenoi
Mayor

BJ Leithead Todd
Director

John A. Medeiros
Deputy Director

County of Hawai'i

DEPARTMENT OF ENVIRONMENTAL MANAGEMENT
345 Kekūanaō'a St., Suite 41• Hilo, Hawai'i 96720
(808) 961-8083 · Fax (808) 961-8086
http://www.hawaiicounty.gov/environmental-management/

September 10, 2015

Keli'i Kapali
Senior Planner
PBR Hawai'i and Associates, Inc.
1001 Bishop Street, Suite 650
Honolulu, HI 96813-3484

RE: Pre-Assessment Consultation for Proposed Improvements at Lalamilo Well A, Lalamilo, South Kohala District

Our department has no comments to offer on this project.

Thank you for allowing us to review and comment.

Sincerely,

BJ Leithead Todd

BJ Leithead Todd
DIRECTOR

PBR HAWAII
& ASSOCIATES, INC.

PRINCIPALS

THOMAS S. WITTEN, ASLA
Chairman

R. STAN DUNCAN, ASLA
President

RUSSELL Y. J. CHUNG, FASLA, LEED®AP BD+C
Executive Vice-President

VINCENT SHIGEKUNI
Vice-President

GRANT T. MURAKAMI, AICP, LEED®AP BD+C
Vice-President

TOM SCHNELL, AICP
Principal

W. FRANK BRANDT, FASLA
Chairman Emeritus

ASSOCIATES

RAYMOND T. HIGA, ASLA
Senior Associate

KIMI MIKAMI YUEN, LEED®AP BD+C
Senior Associate

SCOTT ALIKA ABRIGO, LEED®AP BD+C
Managing Director - Kapolei

ROY TAKEMOTO
Managing Director - Hilo

SCOTT MURAKAMI, ASLA, LEED®AP
Associate

DACHENG DONG, LEED®AP
Associate

MARC SHIMATSU, ASLA
Associate

CATIE CULLISON, AICP
Associate

November 6, 2015

Ms. BJ Leithead Todd, Director
Department of Environmental Management
County of Hawai‘i
345 Kekuanaoa Street, Suite 41
Hilo, Hawai‘i 96720

SUBJECT: PRE-ASSESSMENT CONSULTATION FOR THE PROPOSED IMPROVEMENTS AT LĀLĀMILO WELL A, LĀLĀMILO, SOUTH KOHALA DISTRICT, SIALND AND COUNTY OF HAWAI‘I, TMK (3)6-6-001:068

Dear Ms. Leithead Todd,

Thank you for your letter dated September 10, 2015, regarding pre-consultation for the Lālāmilo Well A Improvements Draft Environmental Assessment (EA). As the planning consultant for the applicant, the County of Hawai‘i Department of Water Supply, we acknowledge that the Hawai‘i Department of Environmental Management has no comments to offer on the proposed improvements at Lālāmilo Well A.

Thank you for your participation in the environmental review process. Your letter will be included in the Draft EA.

Sincerely,
PBR HAWAII

Keli‘i Kapali
Planner

cc: County of Hawai‘i Department of Water Supply

O:\Job30\3080.02 Lalamilo Well EA\EA\Pre-Consultation\Responses\DEM.docx

HONOLULU OFFICE
1001 Bishop Street, Suite 650
Honolulu, Hawai'i 96813-3484
Tel: (808) 521-5631
Fax: (808) 523-1402
E-mail: sysadmin@pbrhawaii.com

KAPOLEI OFFICE
1001 Kamokila Boulevard
Kapolei Building, Suite 313
Kapolei, Hawai'i 96707-2005
Tel: (808) 521-5631
Fax: (808) 535-3163

HILO OFFICE
1719 Haleloke Street
Hilo, Hawai'i 96720-1553
Tel/Cel: (808) 315-6878

printed on recycled paper

Transmittal

To: KELI'I KAPALI

From: KONA PLANNING

Fax: 808-523-1402

Pages: 3

Phone:

Date: 9-3-2015

Re:

CC:

☐ Urgent ☒ For Review ☐ Please Comment ☐ Please Reply ☐ Please Recycle

- **Comments:**

William P. Kenoi
Mayor

Duane Kanuha
Director

Bobby Command
Deputy Director

West Hawai'i Office
74-5044 Ane Keohokalole Hwy
Kailua-Kona, Hawai'i 96740
Phone (808) 323-4770
Fax (808) 327-3563

County of Hawai'i

PLANNING DEPARTMENT

East Hawai'i Office
101 Pauahi Street, Suite 3
Hilo, Hawai'i 96720
Phone (808) 961-8288
Fax (808) 961-8742

September 3, 2015

Mr. Keli'I Kapali
Senior Planner
PBR Hawaii & Associates, Inc.
1719 Haleloke Street
Hilo, HI 96720

SUBJECT: PRE-ASSESSMENT CONSULTATION FOR PROPOSED IMPROVEMENTS AT LALAMILO WELL A, LALAMILO, SOUTH KOHALA, DISTRICT, ISLAND AND COUNTY OF HAWAII
TMK: (3) 6-6-001:068, POR. Lalamilo, South Kohala, HI (COR-15-100460)

Dear Mr. Kapali:

We are providing comments in response to the pre-assessment consultation for the above-mentioned project. The subject parcel is zoned Agricultural (A-5a) with a minimum land area of five acres required for each building site, and the State Land Use designation is Agricultural. The parcel is approximately 32,400 square feet.

In accordance with the Hawaii County Code, Chapter 25 (Zoning Code), Section 25-4-11 (b): "Any substation used by a public or private utility for the purpose of furnishing telephone, gas, electricity, water, sewer, radio, or television shall be a permitted use in any district provided that the use is not hazardous or dangerous to the surrounding area and the director has issued plan approval for such use." Therefore, the 1) upsizing of the well pump to the original tested capacity; 2) associated upgrades for piping and appurtenances; and 3) a new control building, would be a permitted use as long as such use has been issued a plan approval.

In the preparation of the Environmental Assessment, the proposed infrastructure improvements should also be evaluated for consistency with both our County of Hawaii General Plan (February 2005) and the South Kohala Community Development Plan (November 2008). The General Plan is available online at http://records.co.hawaii.hi.us/WebLink8/DocView.aspx?id=69701&dbid=1 and the South Kohala CDP is available online at http://www.hawaiicountycdp.info/south-kohala-cdp/skcdpfinaldraft11.18.08.pdf/view.

Should you have any questions on this matter, please contact Rosalind Newlon of our West Hawaii office at (808) 323-4770.

Sincerely,

B. Mark

DUANE KANUHA
Planning Director

RJN:rjn

C:\Users\rnewlon\Desktop\Newlon\Letters\COR-15-100460 6-6-001-068 PBR Hawaii.doc

Cc: West Hawaii Office

PBR HAWAII
& ASSOCIATES, INC.

PRINCIPALS

THOMAS S. WITTEN, ASLA
Chairman

R. STAN DUNCAN, ASLA
President

RUSSELL Y. J. CHUNG, FASLA, LEED®AP BD+C
Executive Vice-President

VINCENT SHIGEKUNI
Vice-President

GRANT T. MURAKAMI, AICP, LEED®AP BD+C
Vice-President

TOM SCHNELL, AICP
Principal

W. FRANK BRANDT, FASLA
Chairman Emeritus

ASSOCIATES

RAYMOND T. HIGA, ASLA
Senior Associate

KIMI MIKAMI YUEN, LEED®AP BD+C
Senior Associate

SCOTT ALIKA ABRIGO, LEED®AP BD+C
Managing Director - Kapolei

ROY TAKEMOTO
Managing Director - Hilo

SCOTT MURAKAMI, ASLA, LEED®AP
Associate

DACHENG DONG, LEED®AP
Associate

MARC SHIMATSU, ASLA
Associate

CATIE CULLISON, AICP
Associate

HONOLULU OFFICE
1001 Bishop Street, Suite 650
Honolulu, Hawai'i 96813-3484
Tel: (808) 521-5631
Fax: (808) 523-1402
E-mail: sysadmin@pbrhawaii.com

KAPOLEI OFFICE
1001 Kamokila Boulevard
Kapolei Building, Suite 313
Kapolei, Hawai'i 96707-2005
Tel: (808) 521-5631
Fax: (808) 535-3163

HILO OFFICE
1719 Haleloke Street
Hilo, Hawai'i 96720-1553
Tel/Cel: (808) 315-6878

printed on recycled paper

November 6, 2015

Mr. Duane Kanuha, Director
Department of Planning
County of Hawai'i
74-5044 Ane Keohokalole Highway, Bldg E
Kailua-Kona, Hawai'i 96740

Attn: Ms. Rosalind Newlon

SUBJECT: PRE-ASSESSMENT CONSULTATION FOR THE PROPOSED IMPROVEMENTS AT LĀLĀMILO WELL A, LĀLĀMILO, SOUTH KOHALA DISTRICT, SIALND AND COUNTY OF HAWAI'I, TMK (3)6-6-001:068

Dear Mr. Kanuha,

Thank you for your letter dated September 3, 2015, regarding pre-consultation for the Lālāmilo Well A Improvements Draft Environmental Assessment (EA). As the planning consultant for the applicant, the County of Hawai'i Department of Water Supply, we note the Department of Planning's determination that the proposed improvements for the Lālāmilo Well A are permitted uses, as long as a plan approval is issued. These proposed improvements include: 1) upsizing of the well pump to the original tested capacity; 2) associated upgrades for piping and appurtenances; and 3) a new control building on the subject parcel which is zoned Agriculture. Further, the Department's determination relative to the proposed improvements are in accordance with the Hawaii County Code, Chapter 25 (Zoning Code), Section 25-4-11 (b).

The Final EA will include detailed discussion of how the proposed infrastructure improvements conform with the County of Hawaii General Plan and the South Kohala Community Development Plan.

Thank you for your participation in the environmental review process. Your letter will be included in the Draft EA.

Sincerely,
PBR HAWAII

Keli'i Kapali

Keli'i Kapali
Planner

cc: County of Hawai'i Department of Water Supply

O:\Job30\3080.02 Lalamilo Well EA\EA\Pre-Consultation\Responses\CH Planning.docx

William P. Kenoi
Mayor

Darren J. Rosario
Fire Chief

Renwick J. Victorino
Deputy Fire Chief

County of Hawai'i
HAWAI'I FIRE DEPARTMENT
25 Aupuni Street • Suite 2501 • Hilo, Hawai'i 96720
(808) 932-2900 • Fax (808) 932-2928

August 25, 2015

Mr. Keli'i Kapali
PBR Hawaii & Associates, Inc.
Senior Planner
1001 Bishop Street, Suite 650
Honolulu, Hawai'i 96813-3484

Dear Mr. Keli'i Kapali,

SUBJECT: PRE-ASSESSMENT CONSULTATION FOR THE PROPOSED IMPROVEMENTS AT LALAMILO WELL A, LALAMILO, SOUTH KOHALA DISTRICT, ISLAND AND COUNTY OF HAWAI'I

The Hawai'i Fire Department has no issues with regards to the proposed improvement at Lalamilo Well A application as noted above.

DARREN J. ROSARIO
Fire Chief

KT:ds

PBR HAWAII
& ASSOCIATES, INC.

PRINCIPALS

THOMAS S. WITTEN, ASLA
Chairman

R. STAN DUNCAN, ASLA
President

RUSSELL Y. J. CHUNG, FASLA, LEED®AP BD+C
Executive Vice-President

VINCENT SHIGEKUNI
Vice-President

GRANT T. MURAKAMI, AICP, LEED®AP BD+C
Vice-President

TOM SCHNELL, AICP
Principal

W. FRANK BRANDT, FASLA
Chairman Emeritus

ASSOCIATES

RAYMOND T. HIGA, ASLA
Senior Associate

KIMI MIKAMI YUEN, LEED®AP BD+C
Senior Associate

SCOTT ALIKA ABRIGO, LEED®AP BD+C
Managing Director - Kapolei

ROY TAKEMOTO
Managing Director - Hilo

SCOTT MURAKAMI, ASLA, LEED®AP
Associate

DACHENG DONG, LEED®AP
Associate

MARC SHIMATSU, ASLA
Associate

CATIE CULLISON, AICP
Associate

November 6, 2015

Darren J. Rosario, Fire Chief
Hawai‘i Fire Department
County of Hawai‘i
25 Aupuni Street, Room 2501
Hilo, Hawai‘i 96720

SUBJECT: PRE-ASSESSMENT CONSULTATION FOR THE PROPOSED IMPROVEMENTS AT LĀLĀMILO WELL A, LĀLĀMILO, SOUTH KOHALA DISTRICT, SIALND AND COUNTY OF HAWAI‘I, TMK (3)6-6-001:068

Dear Chief Rosario,

Thank you for your letter dated August 25, 2015, regarding pre-consultation for the Lālāmilo Well A Improvements Draft Environmental Assessment (EA). As the planning consultant for the applicant, the County of Hawai‘i Department of Water Supply, we acknowledge that the Hawaii Fire Department has no issues with regards to the proposed improvements at Lālāmilo Well A.

Thank you for your participation in the environmental review process. Your letter will be included in the Draft EA.

Sincerely,
PBR HAWAII

Keli‘i Kapali
Planner

cc: County of Hawai‘i Department of Water Supply

O:\Job30\3080.02 Lalamilo Well EA\EA\Pre-Consultation\Responses\CH Fire.docx

HONOLULU OFFICE
1001 Bishop Street, Suite 650
Honolulu, Hawai'i 96813-3484
Tel: (808) 521-5631
Fax: (808) 523-1402
E-mail: sysadmin@pbrhawaii.com

KAPOLEI OFFICE
1001 Kamokila Boulevard
Kapolei Building, Suite 313
Kapolei, Hawai'i 96707-2005
Tel: (808) 521-5631
Fax: (808) 535-3163

HILO OFFICE
1719 Haleloke Street
Hilo, Hawai'i 96720-1553
Tel/Cel: (808) 315-6878

printed on recycled paper

William P. Kenoi
Mayor

Harry S. Kubojiri
Police Chief

Paul K. Ferreira
Deputy Police Chief

County of Hawai'i

POLICE DEPARTMENT
349 Kapi'olani Street • Hilo, Hawai'i 96720-3998
(808) 935-3311 • Fax (808) 961-2389

August 28 2015

Mr. Keli'i Kapali
Senior Planner
PBR Hawaii & Associates, Inc.
1001 Bishop Street, Suite 650
Honolulu, Hawaii 96813-3484

SUBJECT: PRE-ASSESSMENT CONSULTATION FOR PROPOSED IMPROVEMENTS AT LALAMILO WELL A, LALAMILO, SOUTH KOHALA DISTRICT, ISLAND AND COUNTY OF HAWAII

Dear Mr. Kapali:

This is in response to your correspondence of August 18, 2015 with regard to the above-referenced project.

We have reviewed the information provided and have no comments or objections to offer at this time.

If you have any questions regarding this matter, please contact Captain Randall Medeiros, Commander of the South Kohala District, at 887-3080.

Sincerely,

HARRY S. KUBOJIRI
POLICE CHIEF

PAUL H. KEALOHA JR.
ASSISTANT POLICE CHIEF
AREA II OPERATIONS

RM
RS150535

PBR HAWAII
& ASSOCIATES, INC.

PRINCIPALS

THOMAS S. WITTEN, ASLA
Chairman

R. STAN DUNCAN, ASLA
President

RUSSELL Y. J. CHUNG, FASLA, LEED®AP BD+C
Executive Vice-President

VINCENT SHIGEKUNI
Vice-President

GRANT T. MURAKAMI, AICP, LEED®AP BD+C
Vice-President

TOM SCHNELL, AICP
Principal

W. FRANK BRANDT, FASLA
Chairman Emeritus

ASSOCIATES

RAYMOND T. HIGA, ASLA
Senior Associate

KIMI MIKAMI YUEN, LEED®AP BD+C
Senior Associate

SCOTT ALIKA ABRIGO, LEED®AP BD+C
Managing Director - Kapolei

ROY TAKEMOTO
Managing Director - Hilo

SCOTT MURAKAMI, ASLA, LEED®AP
Associate

DACHENG DONG, LEED®AP
Associate

MARC SHIMATSU, ASLA
Associate

CATIE CULLISON, AICP
Associate

HONOLULU OFFICE
1001 Bishop Street, Suite 650
Honolulu, Hawai'i 96813-3484
Tel: (808) 521-5631
Fax: (808) 523-1402
E-mail: sysadmin@pbrhawaii.com

KAPOLEI OFFICE
1001 Kamokila Boulevard
Kapolei Building, Suite 313
Kapolei, Hawai'i 96707-2005
Tel: (808) 521-5631
Fax: (808) 535-3163

HILO OFFICE
1719 Haleloke Street
Hilo, Hawai'i 96720-1553
Tel/Cel: (808) 315-6878

printed on recycled paper

November 6, 2015

Chief Harry S. Kubojiri, Police Chief
Police Department
County of Hawai‘i
349 Kapi'olani Street
Hilo, Hawai‘i 96720

Attention: Captain Randall Medeiros

SUBJECT: PRE-ASSESSMENT CONSULTATION FOR THE PROPOSED IMPROVEMENTS AT LĀLĀMILO WELL A, LĀLĀMILO, SOUTH KOHALA DISTRICT, SIALND AND COUNTY OF HAWAI‘I, TMK (3)6-6-001:068

Dear Chief Kubojiri,

Thank you for your letter dated August 28, 2015, regarding pre-consultation for the Lālāmilo Well A Improvements Draft Environmental Assessment (EA). As the planning consultant for the applicant, the County of Hawai‘i Department of Water Supply, we acknowledge that the Hawaii Police Department has no comments nor objections with regards to the proposed improvements at Lālāmilo Well A.

Thank you for your participation in the environmental review process. Your letter will be included in the Draft EA.

Sincerely,
PBR HAWAII

Keli‘i Kapali
Planner

cc: County of Hawai‘i Department of Water Supply

O:\Job30\3080.02 Lalamilo Well EA\EA\Pre-Consultation\Responses\CH Police Dept.docx

CUST 3-3-1
H-W/G

September 2, 2015

PBR Hawaii & Associates, Inc.
1001 Bishop Street Suite 650
Honolulu Hawai'i 96813-3484
Attention: Keli'i Kapali

Gentlemen:

Subject: Pre-Assessment Consultation for Proposed Improvements at Lālāmilo Well A
Lālāmilo, South Kohala, Island of Hawai'i
Tax Map Key: 6-6-001:068

Thank you for the opportunity to comment on the subject's Pre-Assessment Consultation. Hawai'i Electric Light will be able to provide electrical service to the proposed development in South Kohala. A detailed analysis will be performed after the receipt of the consultant's detailed design drawings and estimated load. The following is a summary of our comments:

1. Generation capacity – As of January 2015, Hawai'i Electric Light's current system peak load is 187,800kW and our total generation system capability is 277,300kW. Our reserve margin is 48% and may have adequate generation to serve the above.

2. Electrical Substation - The area is served by our existing Mauna Lani electrical substation and 12,470 volt overhead distribution. Until proposed loads are given, we are unable to determine if the capacity of our existing substation is adequate to serve the proposed improvements at Lālāmilo Well A.

3. Off-Site Electrical Transmission System – The existing 69,000 volt transmission line runs along a corridor approximately 17,000 feet east of Queen Ka'ahumanu Highway.

4. Off-Site Electrical Distribution System – The existing off-site 12,470 volt overhead distribution system runs to the customer's primary metering switchgear. Until details are provided, it is undetermined at this time if the facilities are adequate for the proposed improvements.

5. On-Site Electrical Distribution System – On-site distribution lines are owned by the customer. There also exists a separate on-site utility distribution lines which serves Well A as a "back-up" option. Again, until details are provided, it is undetermined at this time if the facilities are adequate for the proposed improvements.

After the development's detailed loading and civil plans are submitted, Hawai'i Electric Light will prepare a firm cost to provide electrical power to this development.

Hawai'i Electric Light recommends energy efficient and conservation measures to reduce the maximum electrical demand and energy consumption. The developer may call Hawai'i Electric Light's Energy Services department at (808) 935-1171 for questions or details on available programs.

It is encouraged that the developer's electrical consultant open a service request with Hawai'i Electric Light Engineering department as soon as practicable to ensure timely electrical facility installation. If you have any questions, please contact me at (808) 327-0504 or email shelley.doctor@hawaiielectriclight.com.

Sincerely,

Shelley Doctor
Electrical Engineer, Planning Division
Engineering Department

email: K. Kubojiri
M. Mather

PBR HAWAII
& ASSOCIATES, INC.

PRINCIPALS

THOMAS S. WITTEN, ASLA
Chairman

R. STAN DUNCAN, ASLA
President

RUSSELL Y. J. CHUNG, FASLA, LEED®AP BD+C
Executive Vice-President

VINCENT SHIGEKUNI
Vice-President

GRANT T. MURAKAMI, AICP, LEED®AP BD+C
Vice-President

TOM SCHNELL, AICP
Principal

W. FRANK BRANDT, FASLA
Chairman Emeritus

ASSOCIATES

RAYMOND T. HIGA, ASLA
Senior Associate

KIMI MIKAMI YUEN, LEED®AP BD+C
Senior Associate

SCOTT ALIKA ABRIGO, LEED®AP BD+C
Managing Director - Kapolei

ROY TAKEMOTO
Managing Director - Hilo

SCOTT MURAKAMI, ASLA, LEED®AP
Associate

DACHENG DONG, LEED®AP
Associate

MARC SHIMATSU, ASLA
Associate

CATIE CULLISON, AICP
Associate

HONOLULU OFFICE
1001 Bishop Street, Suite 650
Honolulu, Hawai'i 96813-3484
Tel: (808) 521-5631
Fax: (808) 523-1402
E-mail: sysadmin@pbrhawaii.com

KAPOLEI OFFICE
1001 Kamokila Boulevard
Kapolei Building, Suite 313
Kapolei, Hawai'i 96707-2005
Tel: (808) 521-5631
Fax: (808) 535-3163

HILO OFFICE
1719 Haleloke Street
Hilo, Hawai'i 96720-1553
Tel/Cel: (808) 315-6878

printed on recycled paper

November 6, 2015

Shelley Doctor, Electrical Engineer
Planning Division, Engineering Department
Hawai'i Electric Light Co, Inc.
74-5519 Kaiwi Street
Kailua-Kona, Hawaii 96740

SUBJECT: PRE-ASSESSMENT CONSULTATION FOR THE PROPOSED IMPROVEMENTS AT LĀLĀMILO WELL A, LĀLĀMILO, SOUTH KOHALA DISTRICT, SIALND AND COUNTY OF HAWAI'I, TMK (3)6-6-001:068

Dear Ms. Doctor,

Thank you for your letter (CUST 3-3-1, H-W/G) dated September 2, 2015, regarding pre-consultation for the Lālāmilo Well A Improvements Draft Environmental Assessment (EA). As the planning consultant for the applicant, the County of Hawai'i Department of Water Supply, we have reviewed Hawaii Electric Light Company's (HELCO) comments with regards to the proposed improvements at Lālāmilo Well A, and offer the following responses.

1. Generation capacity—We appreciate the information you provided about HELCO's current system peak load, total generation system capability, reserve margin and determination that HELCO may have adequate generation to serve the proposed improvements.

2. Electrical Substation—We also appreciate the information provided that the Mauna Lani electrical substation and 12,470 volt overhead distribution service the existing area. We note that additional information for proposed loads are needed to inform HELCO if the capacity of the Mauna Lani substation is adequate to serve the Lālāmilo Well A Improvements. You are probably aware that the Department of Water Supply has an earlier proposed project to install a small windfarm to help power the Lālāmilo Well system.

3-5. Off-Site Electrical Transmission and Distribution Systems, as well as On-Site Electrical Distribution System—We acknowledge the information HELCO provided about those existing systems' capabilities. The Draft EA will include discussion of the existing conditions and potential impacts on electrical needs that may inform HELCO if the existing facilities are adequate for the proposed improvements.

Thank you for your participation in the environmental review process. Your letter will be included in the Draft EA.

Sincerely,
PBR HAWAII

Keli'i Kapali
Planner

cc: County of Hawai'i Department of Water Supply

O:\Job30\3080.02 Lalamilo Well EA\EA\Pre-Consultation\Responses\HELCO.docx

APPENDIX B:
CIVIL ENGINEERING BASIS OF DESIGN REPORT

LALAMILO WELL A
PROPOSED UPSIZING OF WELL PUMP AND SUPPORTING FACILITIES

Lalamilo, South Kohala, Hawaii

BASIS OF DESIGN

Prepared by:

Prime/Civil Consultant	Akinaka & Associates, Ltd. 3375 Koapaka Street, Suite B-206 Honolulu, HI 96819
Mechanical Consultant	Okahara & Associates, Inc. 200 Kohola Street Hilo, HI 96720
Electrical Consultant	Ronald NS Ho & Associates 2153 N King Street, #201 Honolulu, HI 96819
Structural Consultant	KAI Hawaii 50 S Beretania Street, #C-119C Honolulu, HI 96813 Architect Subconsultant: Bryce E Uyehara, AIA

Date: December 2014

TABLE OF CONTENTS

I. BACKGROUND

II. PROJECT DESCRIPTION

III. CONSTRAINTS
- A. Well Shaft
- B. Well Site

IV. PROJECT IMPROVEMENTS AND BASIS OF DESIGN
- A. Building Layout
- B. Well Pump & Piping
- C. Electrical System
- D. Motor Controls & SCADA System
- E. Site Improvements
- F. Waterline
- G. Hydropneumatic System
- H. Solenoid Control Valve Station
- I. Pump Operation Plan
- J. Restroom Plumbing

V. COORDINATION

VI. APPENDICES
- A. Proposed Building Layouts
- B. Conceptual Site Plans
- C. Proposed Lineshaft Pump
- D. Hydropneumatic Pressure Booster System

VII. REFERENCES
- A. Water System Standards, County of Hawaii, dated 2002 and its amendments
- B. Lalamilo Water System, Access Road & Pipeline Well A to Well B, As-Builts Plans dated 1985
- C. Lalamilo Water System plans dated 1980

I. BACKGROUND

The existing Lalamilo Well A was originally outfitted in 1980 with a 700 gpm pump and 350 hp motor.

The original site includes a small pump control building,

two electrical transformers,

and access road enclosed by a chain link fence and double swing gate.

It is located in Lalamilo, South Kohala, Island of Hawaii, Hawaii [TMK: (3) 6-6-001:068].

II. PROJECT DESCRIPTION

A. This project involves the upsizing of the well pump, piping and appurtenances, including a new control building. A solenoid control valve station will also be included to keep the well pump discharge piping flooded during normal pump operations. The site will be improved to accommodate the new layout of the building and pump/piping system.

B. The plans and specifications shall be in accordance to the County of Hawaii, Department of Wate r Supply Water System Standards 2002, as amended.

III. CONSTRAINTS

The constraints imposed on the project include the following:

A. Well Shaft

1. The existing size of the well casing is 12-inches I.D.
2. The screen section of the well casing begins above the static water level (SWL) and ends about 48 feet below SWL.

B. Well Site

1. The elevation of the well site is higher than the existing water storage tank that the new well pump will pump into.

IV. PROJECT IMPROVEMENTS AND BASIS OF DESIGN

A. Building Layout

1. Building Features:
   - Hydropneumatic Pressure Booster System

- Electrical Room
- Pump Control Room
- Restroom (ADA Compliant)

2. 10-foot high concrete block masonry walls
3. Pitch Roof, zinc aluminum corrugated sheet roofing on pre-engineered galvanized or wooden trusses (4:12 pitch)

B. Well Pump & Piping

1. Submersible Pump: This pump alternative has been eliminated from consideration due to the well casing constraints previously mentioned. Because the submersible motor would be within the screen casing, it is not possible to know whether there would be adequate cooling flow passing the motor. A motor shroud or pipe jetting arrangement would not be possible due to the lack of space available.
2. Line Shaft Pump: A Goulds 11CHC – 20 stage, 1,000 gpm @ 1,220' TDH pump has been selected. The electric motor selected is a US Motors 450 HP, 4-Pole, 460V, 3-Phase, 60 Hz, premium-efficiency, VHS, TEFC. Please see the attached pump and motor literature for additional information. Note: The discharge head and sole plate will not be exactly as shown.

C. Electrical System

1. Electrical Service: The electrical service to the new pump station will comprise of two sources: Hawaiian Electric Light Company (HELCO) and Wind Power. Only one source will provide power to the station at any given time. A manual transfer switch with Kirk-key interlocks between the two sources shall prevent paralleling. Preferably, when Wind Power is generating and available to provide power, the station will utilize the renewable source of energy. 480V, 3-phase electrical service will be provided by padmounted transformers on site.
2. Electrical Service and Metering Equipment: The HELCO metering and main service disconnects will be located exterior and away from the control building housed in an outdoor weatherproof electrical switchboard. From the switchboard, a 480V, 3-phase feeder and a 120/240V, 1-phase feeder will feed the control building's electrical equipment. The 1-phase feeder will be generated through an outdoor 480-120/240V, 1-phase transformer.
3. Control Building Incoming Electrical Equipment: The 480V, 3-phase feeder will enter the control building' electrical room and connect to an arc-resistant switchgear. The switchgear will then feed the power conditioning and the reduced voltage solid-state soft starter equipment. The 1-phase feeder will enter the control

building's pump control room and connect to a 120/240V, 1-phase panelboard.

4. Power Conditioning Equipment: Power conditioning equipment will be used to mitigate power quality issues generated from the utility and station loads such as voltage sags, voltage surges, unbalanced power, and low power factor. The power conditioning equipment will consist of an Active Voltage Conditioner and Reactive Power Conditioner. Additional input from HELCO and DWS on specific power quality issues that may arise at this site will be needed to size the power conditioning equipment properly.
5. Motor Starter: A reduced voltage solid-state soft starter will be used to start the 460V, 3-phase, 450 HP motor. The soft starter will be housed in an arc-resistant motor control center structure.

D. Motor Controls & SCADA System

1. Motor Control Panel: The Motor Control Panel will house the flow meter transmitter, power function monitor, and motor controls and indicators, which include various relays and contacts, Hand-Off-Auto selector switch, alarm reset pushbutton, emergency stop pushbutton, running time meter, and LED status indicators. The motor controls will provide the required controls for the pump control valves, solenoid valves, limit switches, flow switches, and pressure switches.
2. Auxiliary Cabinet: The Auxiliary cabinet will house the autodialer, lighting control timer, circular chart recorder, and various LED status indicators.
3. SCADA Cabinet: The SCADA cabinet will house the required SCADA components, including PLC, HMI touch panel, and data ports. It is our understanding that Wind Power will provide and maintain the SCADA equipment.

E. Site Improvements

1. Grading
2. Access Road
3. Security Fence & Gate

F. Water Line

1. The existing 8-inch water line will be realigned and connected to accommodate the layout of the piping system from the well pump to the transmission main.

G. Hydropneumatic System

1. 200-Gal. Holding Tank: This tank will provide a stable supply of water to the hydropneumatic system booster pump.
2. Hydropneumatic Booster Pump: The system selected is a packaged unit manufactured by Penn Pump and Manufacturing. It is

equipped with a 44-gal. hydropneumatic tank. Outlet pressure will be 60 psi. Please see the attached literature for additional information.

H. Solenoid Control Valve Station

1. Description: Since the well site is approximately 71 feet above the tank overflow, the waterline from Well Pump A drains whenever Pump A is off. The draining of the waterline is undesirable since it creates a large air void in the pipe and possible water hammer problems upon subsequent pump start ups. The solenoid control valve will help to prevent the waterline from draining during normal pump shut downs.

I. Pump Operation Plan

Legend (See Mechanical Drawings):

1 – Cla-Val Pump Control Valve (Normally Open): At Deep Well Piping (Item #24)

2 – Masoneilan 36005 Control Valve (Normally Closed): At Deep Well Piping (Item #8)

3 – Cla-Val Solenoid Valve (Normally Closed): At Solenoid Valve Station Piping (Item #9)

1. Pump Start Up Sequence:
   Valve #1 is a normally open valve. When the pump starts up the flow of air and water from the pump goes through this valve only. After a predetermined amount of time (via adjustable timer) for purging, #2 slowly opens to about 25% open where it times out and energizes the pilot solenoid of valve #3 to slowly open. After #3 is fully open, the limit switch actuates valve #1 to slowly close and #2 to slowly open. An alarm will sound if #1 does not fully close, or if #2 or #3 does not fully open. The pump will continue to run except in the event of low flow and the pump flow switch trips the pump off.
2. Pump Shut Down Sequence:
   During pump shut down #1 valve solenoid is de-energized causing #1 to start opening. When #1 is 50% open, #2 and #3 valve solenoids are de-energized and begins to close. Closing speed for #3 causes this valve to close faster than #2. Closing speed for #2 is set to close faster than #1 can open. When #3 and #2 are fully closed, it trips a limit switch to confirm the valves are fully closed. When #1 is fully open the limit switch will trip the pump to shut off.
3. Emergency Pump Shut Off or Power Failure:
   During an emergency shut down or power failure event, the default condition of the valves will be fully open for #1, and fully closed for #2 and #3. The actuator for #2 will be equipped with spring loaded feature to assist in closing the valve to keep the water in the discharge piping from draining back down the pump column. The #3 valve will

slowly close to avoid water hammer. Partial draining of the discharge line will take place. When the pump is started again, the partial opening of #2 will evacuate the discharge line of trapped air through the air relief valves along the discharge line between valves #2 and #3, before #3 starts to open.

J. Restroom Plumbing

1. Description: Plumbing design will be in accordance with the Uniform Plumbing Code, 2006 and the Hawaii County Plumbing Code, as amended.

V. COORDINATION

A. County of Hawaii, Department of Water Supply

B. State of Hawaii, Department of Land and Natural Resources, Commission on Water Resources

APPENDIX A
PROPOSED BUILDING LAYOUT

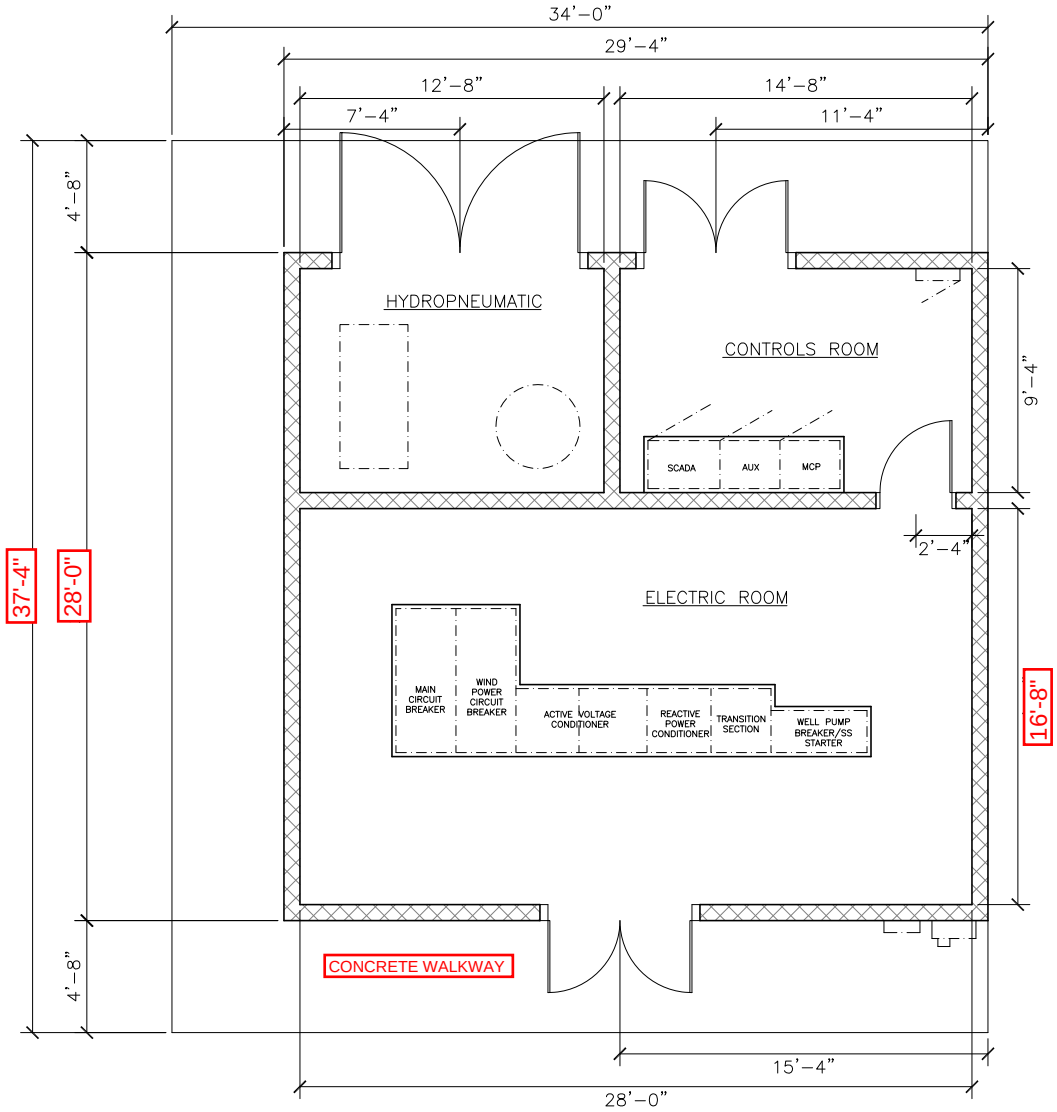

EXHIBIT 1 - NO RESTROOM

SCALE: 1/8"=1'-0"

821.3 Sq Ft

GRAPHIC SCALE

0 4' 8' 16'

FEET

DWS-LALAMILO

ADDRESS

T.M.K.: X – X – X : X

B R Y C E E . U Y E H A R A, A.I.A., INC.
2639 SOUTH KING STREET, SUITE 203 HONOLULU, HAWAII 96826 TELEPHONE: (808) 947-9704

DATE:
NOVEMBER 2014

DRAWING NUMBER
SK-1
SHEET____ OF____

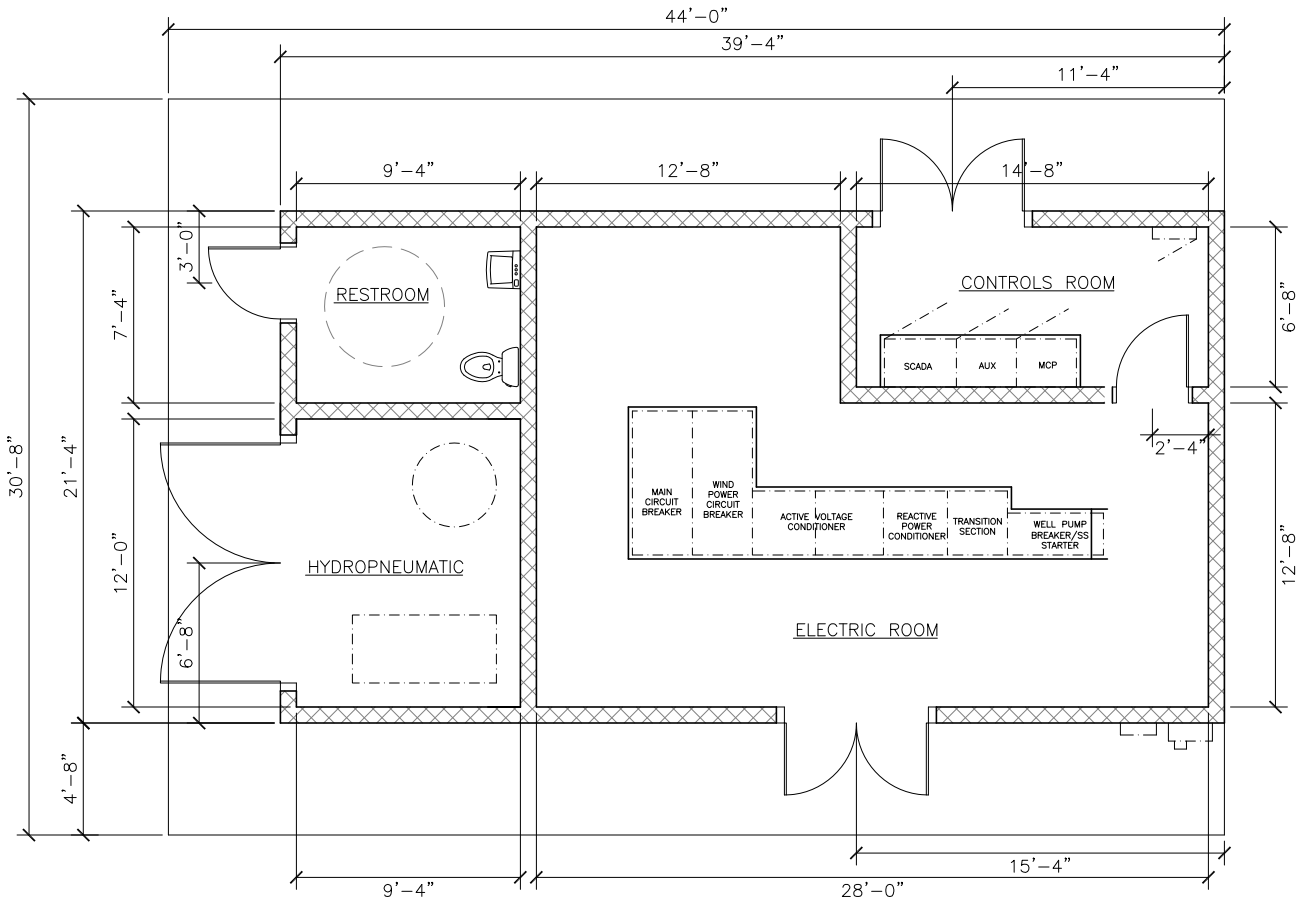

EXHIBIT 2 - WITH RESTROOM

SCALE: 1/8"=1'-0"

839.1 Sq Sf

GRAPHIC SCALE

0 4' 8' 16' FEET

DWS-LALAMILO

ADDRESS

T.M.K.: X – X – X : X

BRYCE E. UYEHARA, A.I.A., INC.
2639 SOUTH KING STREET, SUITE 203 HONOLULU, HAWAII 96826 TELEPHONE: (808) 947-9704

DATE:
NOVEMBER 2014

DRAWING NUMBER
SK-2
SHEET____ OF____

APPENDIX B
CONCEPTUAL SITE PLAN

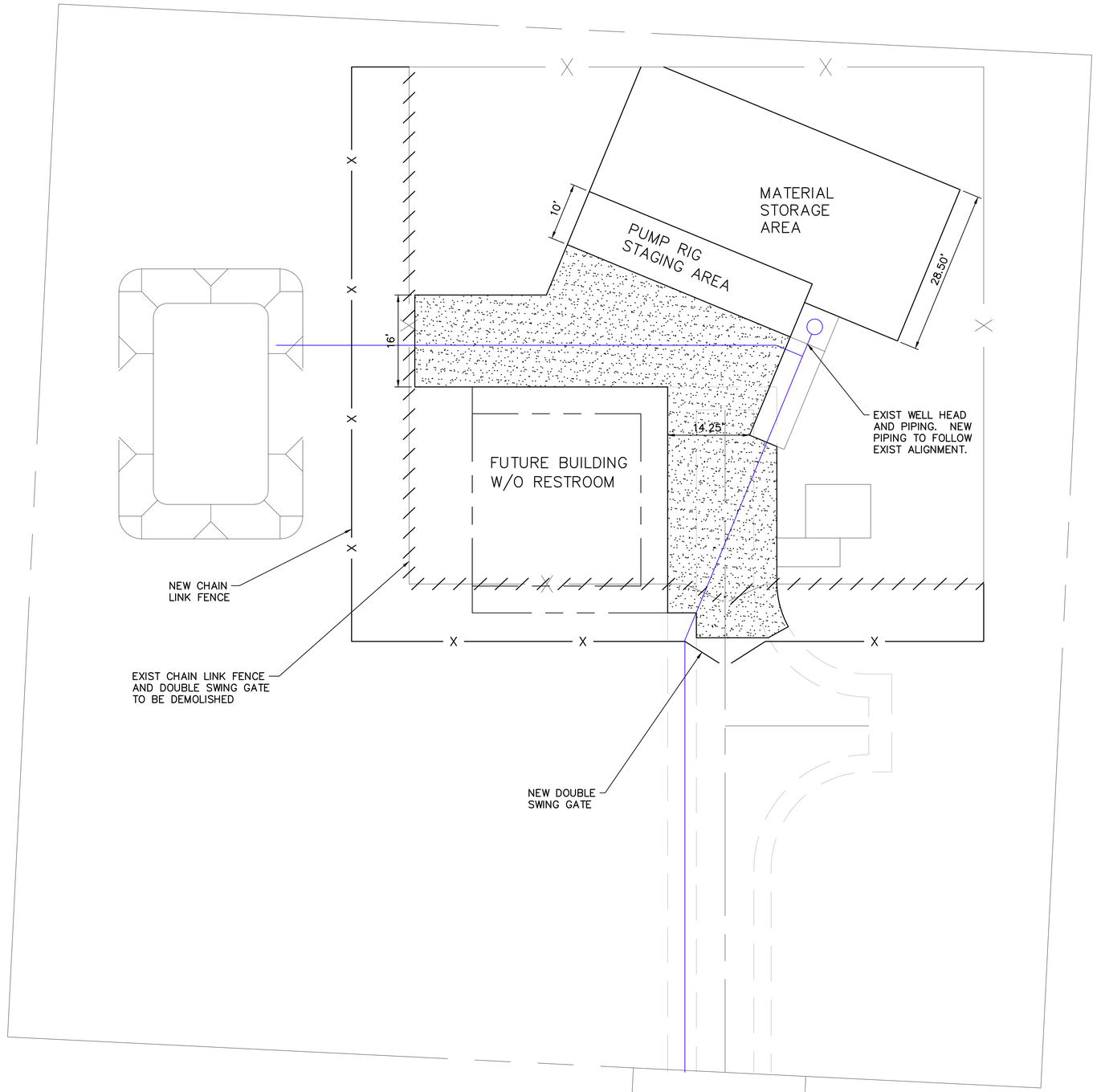

10' 0 10' 20'

SCALE: 1" = 10'-0"

CONCEPTUAL SITE PLAN
W/O RESTROOM

SCALE: 1" = 10'

REVISION DATE	DESCRIPTION	MADE BY	APPROVED

THE TRUE LIFE COMPANIES
LALAMILO WELL A UPSIZING

TAX MAP KEY: (3) 6-6-01:68
SOUTH KOHALA, COUNTY OF HAWAII, HAWAII

CONCEPTUAL SITE PLAN
W/O RESTROOM

THIS WORK WAS PREPARED BY ME OR UNDER MY SUPERVISION AND CONSTRUCTION OF THIS PROJECT WILL BE UNDER MY OBSERVATION
LICENSE EXPIRES 4/30/14

AKINAKA & ASSOCIATES, LTD.
CONSULTING ENGINEERS

SHEET ____ OF XX SHEETS

FILE	POCKET	FOLDER	NO.

Last Save by: GHK
Last Saved: 12/9/2014
Plotted on: 12/9/2014

G:\TTLC1401 Lalamilo A Upsizing\300
DSGN\310 Plans\TTLC1401 Concept Layout
(no RR).dwg

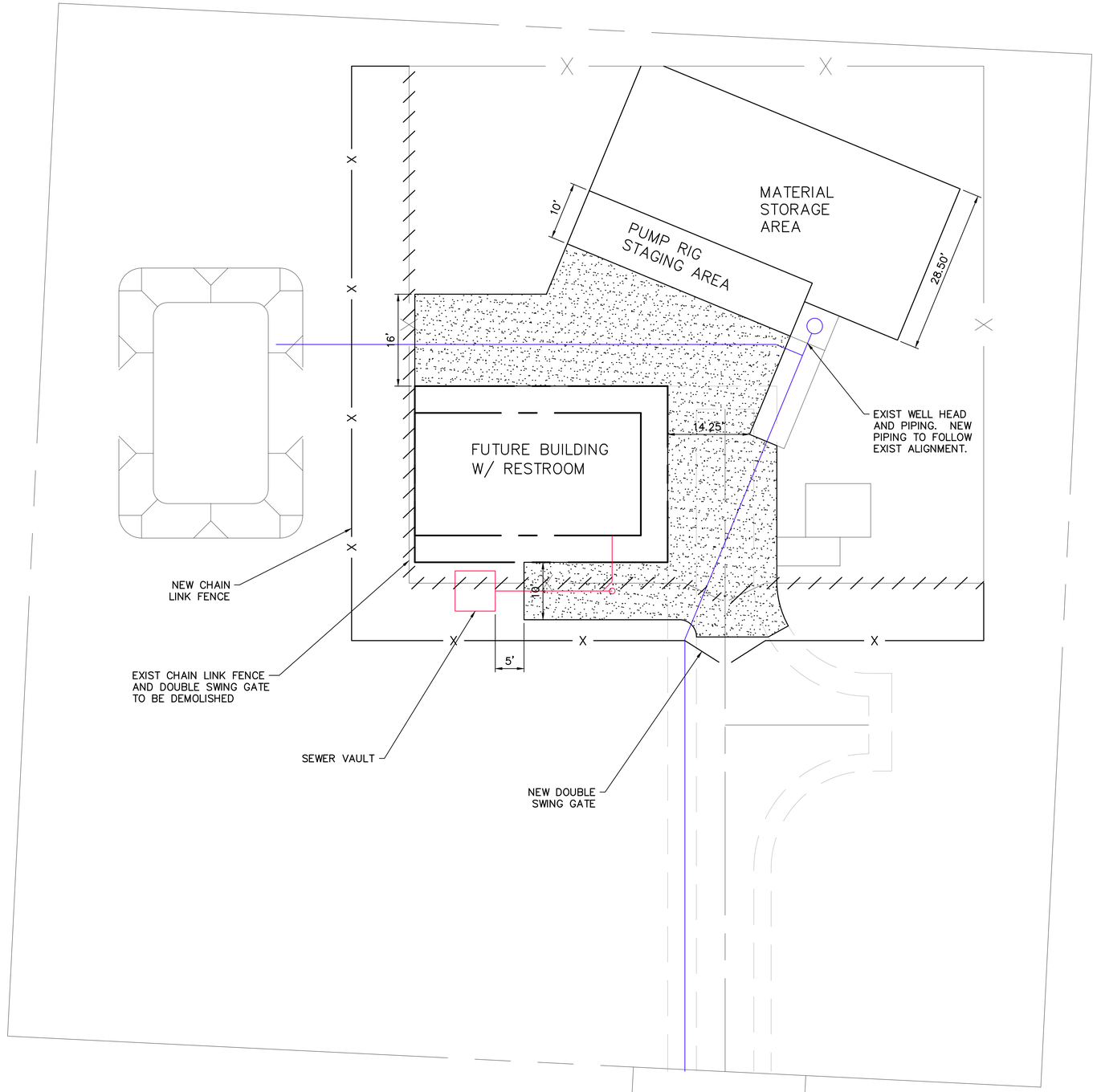

CONCEPTUAL SITE PLAN
W/ RESTROOM

SCALE: 1" = 10'

10' 0 10' 20'

SCALE: 1" = 10'–0"

REVISION DATE	DESCRIPTION	MADE BY	APPROVED

THE TRUE LIFE COMPANIES
LALAMILO WELL A UPSIZING

TAX MAP KEY: (3) 6–6–01:68
SOUTH KOHALA, COUNTY OF HAWAII, HAWAII

CONCEPTUAL SITE PLAN
W/ RESTROOM

THIS WORK WAS PREPARED BY ME OR UNDER MY SUPERVISION AND CONSTRUCTION OF THIS PROJECT WILL BE UNDER MY OBSERVATION
LICENSE EXPIRES 4/30/14

AKINAKA & ASSOCIATES, LTD.
CONSULTING ENGINEERS

SHEET ____ OF XX SHEETS

FILE	POCKET	FOLDER	NO.

Last Save by: GHK
Last Saved: 12/9/2014
Plotted on: 12/9/2014

G:\TTLC1401 Lalamilo A Upsizing\300 DSGN\310 Plans\TTLC1401 Concept Layout.dwg

APPENDIX C
PROPOSED LINE SHAFT PUMP

Printed: 12/9/2014

Goulds

DIMENSIONAL OUTLINE

DWT-FFTM-LL
20 Stage 8x11CHC-LL

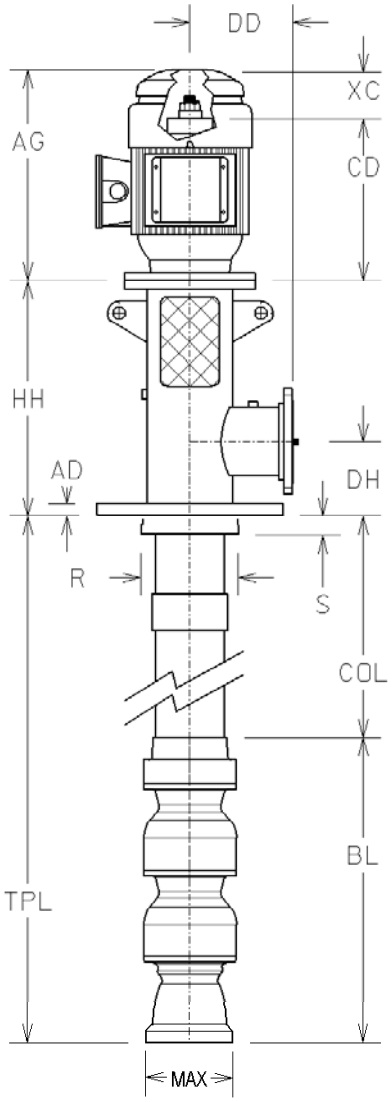

AD:	1.63
AG:	
BD:	30.5
BL:	267.48
CD:	
CL:	N/A
COL:	1180.00'
DD:	15.50
DH:	9.50
G:	23.50
H:	21.25
HH:	30.00
J:	1.13
R:	12.25
S:	2.06
TPL:	1202.3'
UG:	N/A
V:	
W:	23.50
X:	20.50
XC:	
Y:	1.00
Z:	16.25
MAX:	11.00

Pump Data

Size:	11CHC-LL
Stages:	20
BowlShaft:	1.69"
LineShaft:	1.94" BY OTHERS
LineShaft Type:	Enclosed-O/L
Column:	BY OTHERS
Column:	8" Threaded
Bearing Spacing:	5 feet
Section Length:	20 feet
Head:	F:VIT
Flange (Disch.):	8"-300# RF
Suct.:	
Seal:	O-Ring
Strainer:	None
SubBase:	Yes

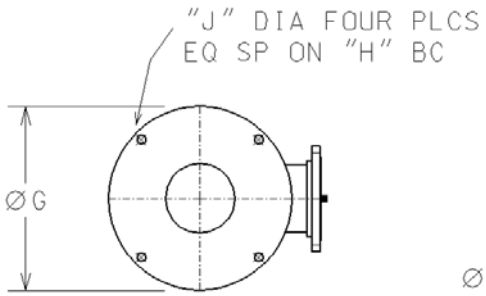

DISC HEAD

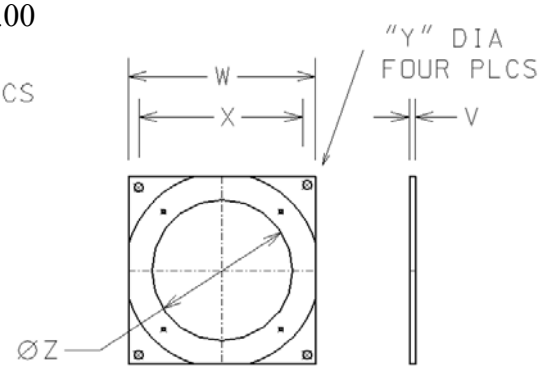

SOLE PLATE

Hydraulic Data

Flow (gpm):	1000
Pump Head (ft):	1076.6
TDH (ft):	1237.0
Speed (rpm):	1770
Fluid:	Water
Temperature (F):	68
Viscosity:	0.9946
Spec.Grav:	1.00012

Miscellaneous

Thrust At Design (lb):	20741
Thrust At Shutoff (lb):	22598
Pumping Level(in):	1200

Weight

Pump (lb):	58748
Motor (lb):	5500
Total (lb):	64248

Motor Data

Model:	VHS
Make:	USEM
HP:	450
RPM:	1800
Type:	JUE Premium TEFC
Efficiency:	95.0
Frame:	5807P
Ratchet:	NRR

Version: 4.18P

Customer: Lalamilo A

Date: 11-07-2014

Goulds

HYDRAULIC ANALYSIS
DWT-FFTM-LL
20 Stage 8x11CHC-LL

GOULDS WATER TECHNOLOGY a xylem brand

Overall Pump Parameters

Size and Model:	11CHC-LL	Pump Operating Speed, RPM:	1770
Capacity, GPM:	1000	Total Dynamic Head, Ft.:	1237.0
Total Pump Length, In.:	14427.5	Impeller Trim, In.:	8.1
Pump Type:	Well	Head Type:	F:VIT
Pump K-Factor:	6.8	Number of Stages:	20
		Pumping Level, In.:	1200.0

LineShaft-Related Data

Shaft Diameter, In.:	1.94	Shaft Limit, HP:	456
Shaft Material:	C-1045	Matl Correction Fact:	1
LineShaft Length, In.:	14160.00	Shaft Elongation, w/o Adder:	1.41
LineShaft Type:	Enclosed-O/L	Impeller Running Clearance:	0.13
Enclosing Tube Diameter:	3.00		

Bowl Data

Total Bowl Length, In.:	267.48	Bowl Diameter, In.:	11
Bowl Shaft Dia, In.:	1.69	Bowl Shaft Limit, HP:	505
		Bowl Shaft Material:	17-4PH

Column Data

Column Diameter, In.:	8	Column Load, Lb.:	12091.7
Wall Thickness, In:	0.322	Column Elongation, In.:	0.62
		Shutoff Column Elongation, In.:	0.77

HorsePower Data

Shaft Friction Loss, Hp.:	21.37	Thrust Load Loss, Hp.:	2.75
Bowl HP At Design, Hp.:	376	Motor HorsePower, Hp.:	450

Other Data

Hydraulic Thrust, Lb.:	8412.6	Thrust at Design, Lb.:	20741.0
Thrust at Shutoff, Lb.:	22597.6	Actual Head above Grade, Ft.:	1076.55
Available Lateral, In.:	2.00	Design Lateral, In.:	0.92
Shutoff Lateral, In.:	1.10		
Suction Pressure, psi:	0.0	Shutoff Disc Pressure, psi:	610.5
Column Loss, Ft.:	59.65	NPSHa, Ft.:	1134.29
Head Loss, Ft.:	0.81	NPSHr, Ft.:	15.00
Total Loss, Ft.:	60.45	NPSH margin, Ft.:	1119.29

Efficiency Data (Efficiencies estimated not guaranteed)

Bowl Efficiency:	83.00	Pump Efficiency:	74.19
Motor Efficiency:	95.00	Overall Efficiency:	70.48
		KWH/1000 gallons:	5.51

Component Weights

Bowl Weight, Lbs.:	2108	Column Weight,Lbs.:	56640
Head Weight, Lbs.:	0	Can Weight,Lbs.:	0
Motor Weight, Lbs.:	5500	Total Pump Weight,Lbs.:	64248

Version: 4.18P Customer: Lalamilo A Date: 11-07-2014

SECTIONAL
DWT-FFTM-LL
20 Stage 8x11CHC-LL

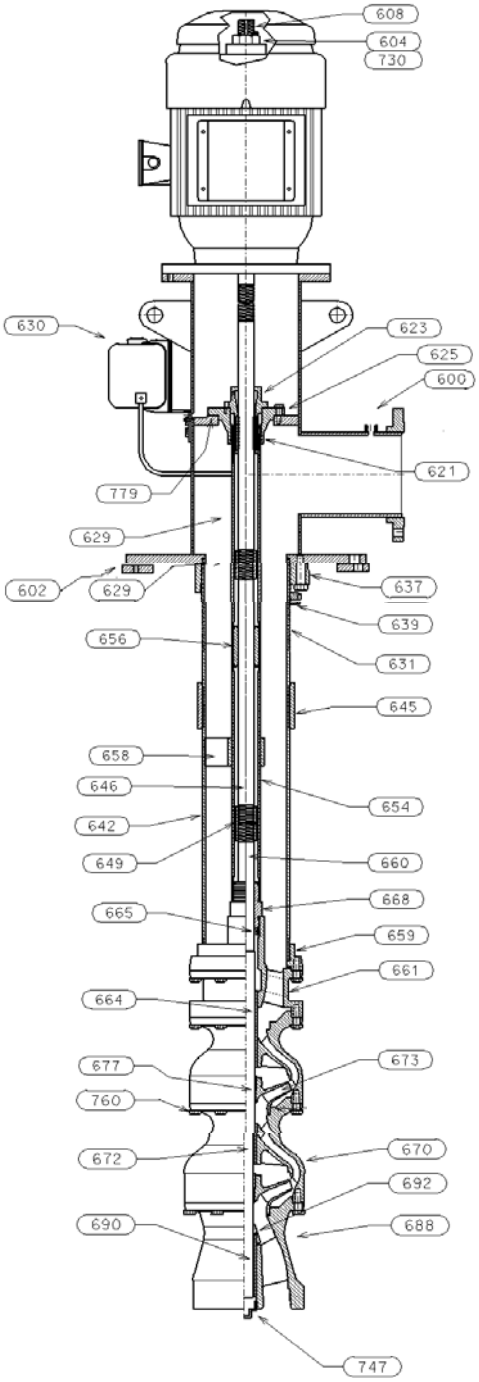

DISCHARGE HEAD ASSEMBLY

ITEM	NAME	Code	MATERIAL	ASTM
600	HEAD- DISCHARGE	9645	CARB0N STEEL FAB	A53
602	SOLEPLATE	3201	CARBON STEEL GR D	A36M-00a
604	NUT- ADJUSTING	2242	CARBON STEEL 1018	A108-99
608	HEADSHAFT	2227	SST 416	A582M-95b
621	O'RING	5302	NITRILE BUNA N	D4322-96
623	NUT- TENSION	1187	BRASS C84400 SEMI-RED	B584-00
625	PLATE- TENSION	1003	CAST IRON CL30	A48-94ae1
630	RESERVOIR- OIL	1425	ALUM 319	B179-96
637	COLUMN FLANGE	1018	DUCTILE IRON 65-45-12	A536-84(1999)e1
730	KEY- MOTOR GIB	2242	CARBON STEEL 1018	A108-99
779	GASKET- HOUSING	5136	ACRYLIC/NITRILE	5136 REV 4

COLUMN AND LINESHAFT ASSEMBLY

BOWL ASSEMBLY

659	ADAPTER- COLUMN TO BOWL	1018	DUCTILE IRON 65-45-12	A536-84(1999)e1
660	SHAFT- BOWL	2259	17-4PH	A564M
661	BOWL- DISCHARGE	1018	DUCTILE IRON 65-45-12	A536-84(1999)e1
664	BEARING- DISC BOWL	1109	FEDERALLOY BISMUTH BRZ	B584-00
665	SEAL- OIL	0000	VENDOR STANDARD	x
668	BEARING- TUBE ADAPTER	1109	FEDERALLOY BISMUTH BRZ	B584-00
670	BOWL- INTERMEDIATE	6917	DUCTILE IRON ENAMEL	A536-84(1999)e1
672	BEARING- INT BOWL	1109	FEDERALLOY BISMUTH BRZ	B584-00
673	IMPELLER	1123	BRONZE, NI AL C95800	B148-97e1
677	COLLET- IMPELLER	2218	SST 416	A582M-95b
688	BOWL/BELL- SUCTION	1018	DUCTILE IRON 65-45-12	A536-84(1999)e1
690	BEARING- SUCTION	1109	FEDERALLOY BISMUTH BRZ	B584-00
692	SANDCOLLAR	1205	SST 304	A744M-00
747	PLUG- PIPE	1046	MALLEABLE IRON	A197
760	CAPSCREW- HEX	2229	SST 316	A276-00a

ADDERS
DWT-FFTM-LL
20 Stage 8x11CHC-LL

ADDITIONAL PUMP COMPONENTS

The following is a list of the additional components you ordered.
Consult factory for any other components or services.

Component

Bowl SS Bolting
Ductile Iron Bowl
416SS Collets
Dynam. Bal. Impeller
Performance Test (Witnessed)
300# Discharge
17-4PH Bowlshaft
NAB Impellers

Pump Data Sheet - Turbine 6

Company: Goulds
Name:
Date: 11/7/2014

Customer: Lalamilo A
Order No:

Pump:

Size: 11CHC-LL (20 stage)

Type: Lineshaft
Synch speed: 1800 rpm

Speed: 1770 rpm
Dia: 8.0625 in

Curve: E6411CMPC0

Impeller:

Specific Speeds:

Ns: 2437
Nss: ---

Dimensions:

Suction: ---
Discharge: ---

Vertical Turbine:

Bowl size: 11 in
Max lateral: 2 in
Thrust K factor: 6.8 lb/ft

Pump Limits:

Temperature: ---
Pressure: ---
Sphere size: 0.68 in

Power: ---
Eye area: ---

Search Criteria:

Flow: 1000 US gpm

Head: 1220 ft

Fluid:

Water
SG: 1
Viscosity: 0.9946 cP

Temperature: 68 °F
Vapor pressure: 0.3391 psi a
Atm pressure: 14.7 psi a

NPSHa: ---

Motor:

Standard: NEMA
Enclosure: WPI

Size: 400 hp
Speed: 1800
Frame: 5008

Sizing criteria: Max Power on Design Curve

Curve Corrections:

NAB Impellers

Factors: Flow x 0.98 Head x 0.98 Eff x 0.98

---- Data Point ----	
Flow:	1000 US gpm
Head:	1237 ft
Eff:	83%
Power:	376 hp
NPSHr:	15 ft
---- Design Curve ----	
Shutoff head:	1510 ft
Shutoff dP:	653 psi
Min flow:	---
BEP:	83.1% @ 970 US gpm
NOL power:	399 hp @ 1422 US gpm
-- Max Curve --	
Max power:	407 hp @ 1377 US gpm

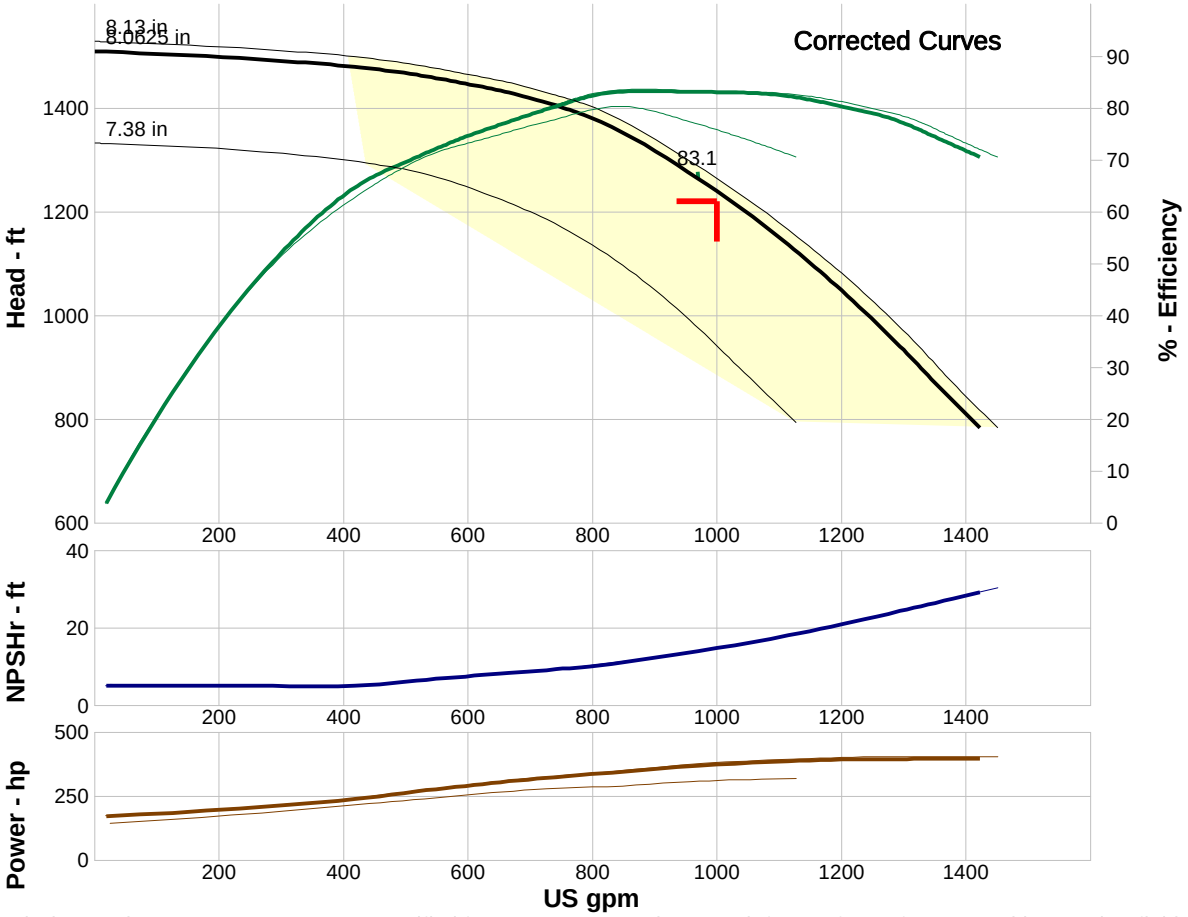

Discharge Sizes-6",8",10". Curves are certified for water at 60°F only. Consult factory for performance with any other fluid.

Performance Evaluation:

Flow US gpm	Speed rpm	Head ft	Efficiency %	Power hp	NPSHr ft
1200	1770	1048	80.3	395	21
1000	1770	1237	83	376	15
800	1770	1380	82.3	338	10.3
600	1770	1446	74.7	293	7.65
400	1770	1481	62.9	237	5.15

MOTOR PERFORMANCE

Model Number:	DI=76608
Status:	**PUB**
Motor Type:	JUE
Frame:	5807
MPI:	143783
HP:	450.00
POLES:	4
VOLTS:	460
HZ:	60
SERVICE FACTOR:	1.15
EFFICIENCY (%):	
S.F.	95.1
FULL	95.0
3/4	95.0
1/2	93.8
1/4	89.4
POWER FACTOR (%):	
S.F.	88.7
FULL	89.3
3/4	89.4
1/2	87.1
1/4	76.2
NO LOAD	13.4
LOCKED ROTOR	15.3
AMPS:	
S.F.	575.0
FULL	496.0
3/4	372.0
1/2	258.0
1/4	155.0
NO LOAD	87.5
LOCKED ROTOR	3217.4
NEMA CODE LETTER	G
NEMA DESIGN LETTER	B
FULL LOAD RPM	1790
NEMA NOMINAL EFFICIENCY (%)	95.0
GUARANTEED EFFICIENCY (%)	94.1
MAX KVAR	59.3
AMBIENT (°C)	40
ALTITUDE (FASL)	3300
SOUND PRESSURE (DBA @ 1M)	92.0
TORQUES:	
BREAKDOWN{% F.L.}	200
LOCKED ROTOR{% F.L.}	80
FULL LOAD{LB-FT}	1321.7
SAFE STALL TIME-HOT (SEC)	30

EFFECTIVE: 08-APR-11	VERTICAL MOTORS TEFC/EXPLOSION PROOF FRAME: 5800 BASIC TYPE: EU, JU	PRINT: 09-1821
SUPERSEDES: 20-DEC-04		SHEET: 1 OF 1

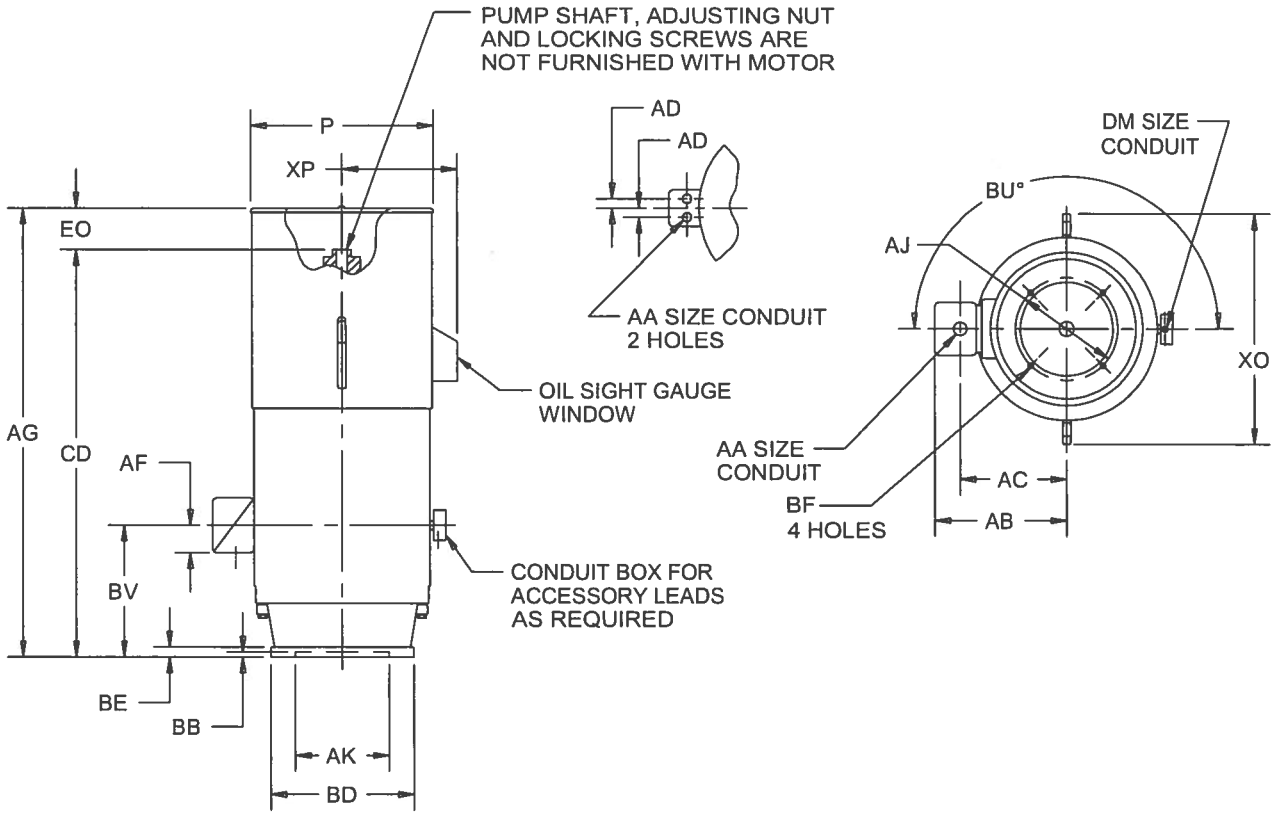

ALL DIMENSIONS ARE IN INCHES

FRAME	AG	CD
5807	73.69	61.53
5809	80.69	68.53
5811	88.69	76.53

FRAME	BD MAX	BE	AJ	BF	AK +.005	BB	P	XO	XP	BV	EO
5800P	30.50	1.25	26.000	.81	22.000	.25	31.13	38.50	17.63	16.75	10
5800PH	24.50		14.750	.69	13.500						
			22.000	.94							

FRAME	HP	TYPE	VOLTS	AA	AB	AC	AD	AF	BU°	DM
5800	THRU 500	JU	460	3.50	26.13	20.63	-	8.06	180	.75
	ALL	JU	2300							
	OVER 500	JU	460		32.38	23.75	3	10.94		
	ALL	JU	4000		27.13	21.63	-	10		
	THRU 500	EU	460	3.50	26.13	19.44	-	5.63	180	.75
	ALL	EU	2300							
	OVER 500	EU	460		32	21.63	3	8.63		
	ALL	EU	4000							

1: ROUGH DIMENSIONS MAY VARY BY +/- 1/4" DUE TO CASTING AND/OR FABRICATION VARIATIONS.
2: CONDUIT OPENINGS MAY BE LOCATED IN STEPS OF 90°. STANDARD IS AS SHOWN WITH CONDUIT OPENING DOWN.

TOLERANCES	
FACE RUNOUT	.007 T.I.R.
PERMISSIBLE ECCENTRICITY OF MOUNTING RABBET	.007 T.I.R.
PERMISSIBLE SHAFT RUNOUT	.003 T.I.R.
SHAFT END PLAY	.010 MAX

09-1821/B

Nidec Motor Corporation
St. Louis, Missouri

INFORMATION DISCLOSED ON THIS DOCUMENT IS CONSIDERED PROPRIETARY AND SHALL NOT BE REPRODUCED OR DISCLOSED WITHOUT WRITTEN CONSENT OF NIDEC MOTOR CORPORATION

ISSUED BY R. KING
APPROVED BY K. POTTER

IHP_DP_NMCA (MAR-2011) SOLIDEDGE

APPENDIX D
HYDROPNEUMATIC PRESSURE BOOSTER SYSTEM

WATER PRESSURE BOOSTER SYSTEMS

SUBMITTAL DATA

Series WPB

APPLICATION

Applications include commercial, industrial, and other installations requiring a boost in water pressure. **The Penn Pump & Equipment Company** Water Pressure Booster System will efficiently provide a steady downstream pressure regardless of a varying flow rate and/or varying inlet pressure.

DESIGN FEATURES

- Professionally engineered components
- Compact design minimizes floor space
- Single source responsibility
- Factory assembled and tested

PROJECT INFORMATION

Project Name:		Model No. Ordered:
Customer:		Total Capacity:
Engineer:		Boost Pressure:
Reference:	Penn Pump Project Number:	Motor HP:
Date:	PO Number:	Voltage:

SPECIFY WITH CONFIDENCE, SPECIFY PENN PUMP SYSTEMS

WATER PRESSURE BOOSTER SYSTEMS: SERIES WPB

SUBMITTAL DATA

SPECIFICATIONS

Furnish and install a packaged water pressure booster system series WPB as manufactured by **Penn Pump & Equipment Company, Inc.,** of Hatfield, PA (215-997-6100). The packaged and tested system shall provide the capacity as scheduled on the drawings.

A. The pump shall be cast iron bronze fitted, end suction, close coupled centrifugal type with a minimum of 175 psi case working pressure, equipped with a bronze shaft sleeve and a mechanical seal. The pump shall include a bronze modulating thermal safety valve to prevent overheating of the pump casing.

B. Each pump shall include a two-piece bronze 600psi WOG non-shock ball valve, isolation valves on the inlet and outlet of each pump to provide service of the pump or control valve, and a spring actuated bronze body check valve.

C. Provide a NEMA 1 system logic controller mounted and wired to contain:

- Single point power connection
- Main disconnect switch with cover interlock
- Individual motor circuit protectors
- Variable Frequency Drives, each with a pressure transducer
- HOA selector switches
- No flow system shut down
- Electronic pump alternation
- Lead pump failure protection
- Low suction shut down with alarm light
- High System pressure shutdown with alarm light
- Remote monitoring contacts

D. The pump package shall include a 44 gallon hydropneumatic tank mounted and piped on the package. The tank shall also include a pressure relief valve, pressure gauge, and tank isolation valves.

E. The packaged pumping system shall be factory assembled and tested with type "L" copper piping and shall include pressure gauges. It shall be cleaned and painted with a high grade enamel prior to shipment. The service of a factory trained representative shall be made available on the project site for start-up and instructing operating personnel.

WATER PRESSURE BOOSTER SYSTEMS

SUBMITTAL DATA

Model Number	GPM Each Pump	Pump Head		Pump HP	Header Size Suction Disch.	Pump Model	Model Number	GPM Each Pump	Pump Head		Pump HP	Header Size Suction Disch.	Pump Model
		PSI	Feet						PSI	Feed			
WPB-6020		20	45	1.5		1250	WPB-16020		20	45	3		1550
6030		30	70	2	2" Simplex	1250	16030		30	70	5		1550
6040		40	95	3		1550	16040		40	95	7.5		1550
6050		50	115	5		1070	16050	160	50	115	7.5	4" Duplex	1270
6060	60	60	140	5	3" Duplex	1070	16060		60	140	10		1270
6070		70	160	5		1070	16070		70	160	10	6" Triplex	1270
6080		80	185	7.5		1070	16080		80	185	15		1270
6090		90	210	7.5	3" Triplex	1070	16090		90	210	20		1595
60100		100	231	10		1270	160100		100	231	20		1595
WPB-8020		20	45	1.5		1550	WPB-18020		20	45	5		1550
8030		30	70	3	2" Simplex	1550	18030		30	70	5		1550
8040		40	95	5		1550	18040		40	95	7.5		1550
8050		50	115	5		1070	18050		50	115	10	4" Duplex	1570
8060	80	60	140	7.5	3" Duplex	1070	18060	180	60	140	10		1570
8070		70	160	7.5		1070	18070		70	160	15	6" Triplex	1570
8080		80	185	7.5		1070	18080		80	185	15		1570
8090		90	210	7.5	3" Triplex	1070	18090		90	210	20		1595
80100		100	231	10		1595	180100		100	231	20		1595
WPB-10020		20	45	2		1550	WPB-20020		20	45	3		2050
10030		30	70	3	2" Simplex	1550	20030		30	70	5		2050
10040		40	95	5		1550	20040		40	95	7.5		1570
10050		50	115	5		1070	20050		50	115	10	4" Duplex	1570
10060	100	60	140	7.5	3" Duplex	1070	20060	200	60	140	10		1570
10070		70	160	7.5		1070	20070		70	160	15	6" Triplex	1570
10080		80	185	10		1070	20080		80	185	15		1570
10090		90	210	10	4" Triplex	1270	20090		90	210	20		1595
100100		100	231	15		1595	200100		100	231	25		1595
WPB-12020		20	45	2		1550	WPB-25020		20	45	5		2050
12030		30	70	3	2" Simplex	1550	25030		30	70	7.5		2070
12040		40	95	5		1550	25040		40	95	10		2070
12050		50	115	7.5		1070	25050		50	115	10	4" Duplex	2070
12060	120	60	140	7.5	3" Duplex	1070	25060	250	60	140	15		2070
12070		70	160	10		1070	25070		70	160	15	6" Triplex	2070
12080		80	185	10		1270	25080		80	185	20		2070
12090		90	210	10	4" Triplex	1270	25090		90	210	25		1595
120100		100	231	15		1595	250100		100	231	25		2095
WPB-14020		20	45	3		1550	WPB-30020		20	45	7.5		2070
14030		30	70	5	3" Simplex	1550	30030		30	70	10		2070
14040		40	95	5		1550	30040		40	95	15		2070
14050	140	50	115	7.5		1270	30050		50	115	15	4" Duplex	2070
14060		60	140	7.5	3" Duplex	1270	30060	300	60	140	15		2070
14070		70	160	10		1270	30070		70	160	20	6" Triplex	2070
14080		80	185	10		1270	30080		80	185	20		2070
14090		90	210	15	4" Triplex	1270	30090		90	210	30		2095
140100		100	231	15		1595	300100		100	231	30		2095

Note: Selections are 3500 RPM.

Header options:

- ☐ 304 Schedule 40 Stainless Steel
- ☐ Class 125/150 ANSI Flanged
- ☐ Grooved

SPECIFY WITH CONFIDENCE, SPECIFY PENN PUMP SYSTEMS

Penn Pump & Equipment Company, Inc., 2880 Bergey Road Unit O, Hatfield, PA 19440, 215-997-6100, (Fax) 215-997-6195, sales@pennpump.com, © 2013

WATER PRESSURE BOOSTER SYSTEMS

SUBMITTAL DATA

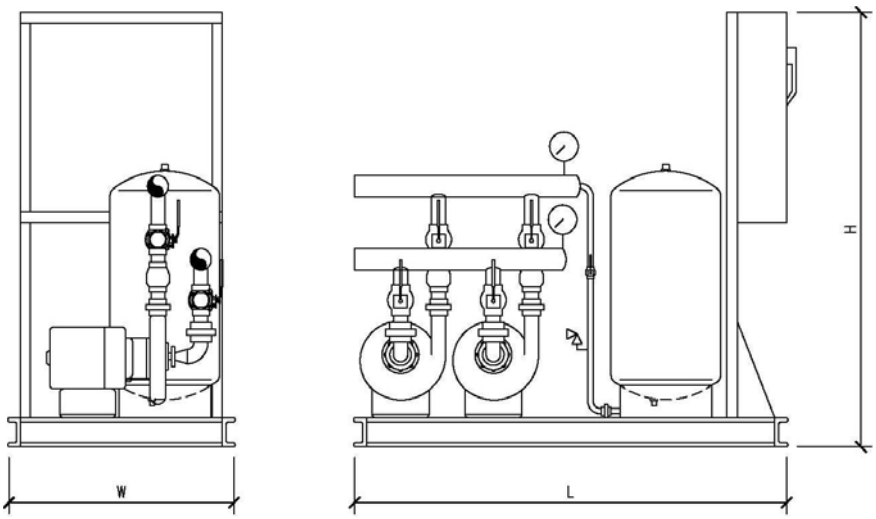

SYSTEM DIMENSIONS

DUPLEX

HP Per Pump	L x W x H (inches)	Dry Wgt. (Lbs.)
1.5 - 7.5	72 x 34 x 60	1300
10 - 15	78 x 34 x 60	1450
20 - 30	84 x 40 x 60	1700

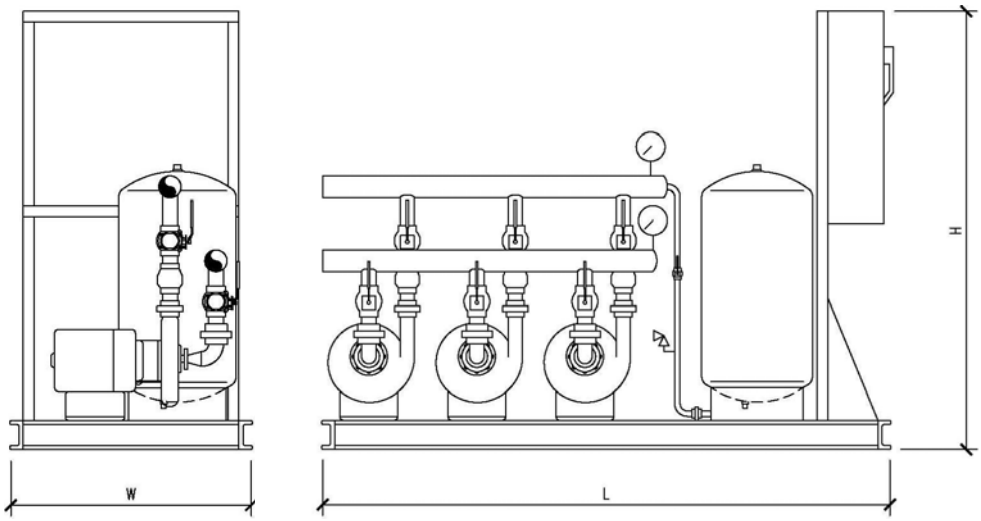

SYSTEM DIMENSIONS

TRIPLEX

HP Per Pump	L x W x H (inches)	Dry Wgt. (Lbs.)
1.5 - 7.5	90 x 34 x 60	1600
10 - 15	96 x 34 x 60	1900
20 - 30	108 x 40 x 60	2250

SPECIFY WITH CONFIDENCE, SPECIFY PENN PUMP SYSTEMS

Penn Pump & Equipment Company, Inc., 2880 Bergey Road Unit O, Hatfield, PA 19440, 215-997-6100, (Fax) 215-997-6195, sales@pennpump.com, © 2013

SUBMITTAL DATA

CENTRIFUGAL PUMPS

DESIGN FEATURES

- Cast Iron Bronze fitted construction
- Back pull out design
- Compact design minimizes floor space
- Factory assembled and tested
- Built according to Hydraulic Institute – NEMA Standards

STANDARD CONSTRUCTION

- Cast Iron Casing
- Bronze Impeller
- Carbon Steel Shaft
- Bronze Shaft Sleeve
- Bronze Case Wear Ring
- Open Drip-Proof Motor
- Single Mechanical Seal
- Maximum Working Pressure 175 PSI

OPTIONS

- TEFC or Explosion-Proof Motors
- High Temperature Seals
- Special Alloy Shaft Seals
- Higher Working Pressure

SPECIFY WITH CONFIDENCE, SPECIFY PENN PUMP SYSTEMS

Penn Pump & Equipment Company, Inc., 2880 Bergey Road Unit O, Hatfield, PA 19440, 215-997-6100, (Fax) 215-997-6195, sales@pennpump.com, © 2013

WATER PRESSURE BOOSTER SYSTEMS

SUBMITTAL DATA

The integrated pump specific software and setup parameters, allow the operator to set up specific control values for a wide range of applications. iQpump will automatically adjust pump operating conditions, as the process variables change while still maintaining optimum pump performance and protection.

Most existing systems, which require constant pressure or flow control, are using bypass lines, pressure release valves, throttling valves or impeller trim adjustments. The most efficient method is pump speed control. Pump speed control will reduce energy consumption, while maintaining system optimization.

The iQpump Controller can be configured for Simplex, Duplex, Triplex or up to an eight-pump system. One iQpump Controller can be used as a master, which can also control one or two secondary pump motors. The secondary pump motors can be connected using mechanical motor starters, reduced voltage soft starters, or additional iQpump drives. The software is structured in such a way that it only has a few basic pump parameters to be setup to run this application.

The iQpump controller is available from 5 to 500 horsepower. In addition to Water Pressure Booster Pumps in Commercial and Industrial applications, the iQpump controller is suitable for a variety of other pumping applications such as Submersible Deep Well Pumps, Storage Tank Level Control, Metering Pumps, and HVAC pumps and fans.

Drive Performance Features

- Ratings: 5-150 HP, 208 VAC 5-150 HP, 230 / 240 VAC 5-500 HP, 480 VAC
- Overload capacity: nominal 110% for 60 sec. (150% peak)
- Starting torque: 100% at 3 Hz
- Motor preheat function
- Adjustable accel/decel: 0.1 to 6000 sec.
- Controlled speed range: 40:1
- Critical frequency rejection: 3 selectable, adjustable bands
- Torque-limiting: 30-180%
- Energy Saving control
- Torque boost: full range, auto
- Power loss ride-thru: 2 sec.
- Auto restart after power loss or fault reset, selectable, programmable
- Feedback signal loss detection
- Serial communications loss detection
- "Up/Down" floating point control capability (PI)
- Stationary motor auto-tuning
- Pump Sleep function
- Run-permissive input

Pump Control Features

- Operator Keypad with intuitive pump language
- Hand-Off-Auto
- Programmable Pump Process Set Point
- Pump Start Level & Start Time
- Sleep Protection
- Simplex, Duplex, & Triplex Control
- Automatic System Restart
- No Flow Detection
- Low and High Feedback set points
- Pre-Charge Low Level Control
- Thrust Bearing Control
- Automatic System Stabilization
- Motor Condensation Pre-Heat Function

Protective Features

- Current-limited stall prevention
- Heat sink over-temperature, speed fold-back
- Bi-directional start into rotating motor
- Current-limiting DC bus fuse
- Optically-isolated controls
- Short circuit protection: Phase-phase and phase-neutral
- Ground fault protection
- Short circuit withstand rating: 100K RMS
- Electronic motor overload: UL
- Current limit
- Fault display: last 10 faults
- Fault circuit: OC, OV, OT
- Over torque and under torque protection

Pump Protective Features

- Dry Well
- Air in System
- Blocked Impeller
- Pump over Cycling
- No Flow Protection
- Loss of Prime
- Transducer Loss
- Over Torque

Pump Alarms and Messages

- Low Feedback
- High Feedback
- Low Level
- Low Water
- Pump Over Cycling
- No Flow Detection
- Loss of Prime
- Pump Fault
- Motor Thermostat
- Pre-Charge Mode
- Thrust Bearing Active
- Start Mode Active
- Sleep Mode Active

Service Conditions

- Ambient Temperature:
- -10°C to 40°C (14° F to 104° F) NEMA 1, -10°C to 45°C (14° F to 113° F) protected chassis
- Humidity: 95% RH, non-condensing
- Altitude: 3300 ft; higher by derate
- Input voltage: +10%/-15%
- Input frequency: 50/60 Hz ± 5%
- 3-phase, 3-wire, phase sequence insensitive

Design Features

- LCD keypad display, 5 lines x 16 characters, backlit, 6 languages, copy function
- Multi-step speed settings: 5 available
- Setpoint (PI) control
- 32-bit microprocessor logic
- Non-volatile memory, program retention
- Displacement power factor: 0.98
- Output frequency: 0.1 to 120 Hz
- Frequency resolution: 0.06 Hz
- Frequency regulation: 0.1%
- Control Terminal Board: Quick disconnect
- Carrier frequency: selectable to 15 kHz
- 3% DC bus reactor: 30-150 HP, 208 VAC; 30-150 HP, 240 VAC; 40-500 HP, 480 VAC; optional on lower ratings
- 24 VDC control logic, PNP / NPN selectable
- Transmitter/Option power supply
- Input/output terminal status
- Timer function: Elapsed time, Delay on start, Delay on stop
- RS-422/485 port: Modbus protocol
- Volts/hertz ratio: Preset and programmable V/Hz patterns
- Meter Functions: Volt, amp, kilowatt, elapsed run time, speed command
- NEMA 1 or protected chassis
- UL, cUL listed and CE marked; IEC 146;
- MTBF: exceeds 28 years

SPECIFY WITH CONFIDENCE, SPECIFY PENN PUMP SYSTEMS

Penn Pump & Equipment Company, Inc., 2880 Bergey Road Unit O, Hatfield, PA 19440, 215-997-6100, (Fax) 215-997-6195, sales@pennpump.com, © 2013

WATER PRESSURE BOOSTER SYSTEMS

TYPICAL WIRING DIAGRAMS

DUPLEX

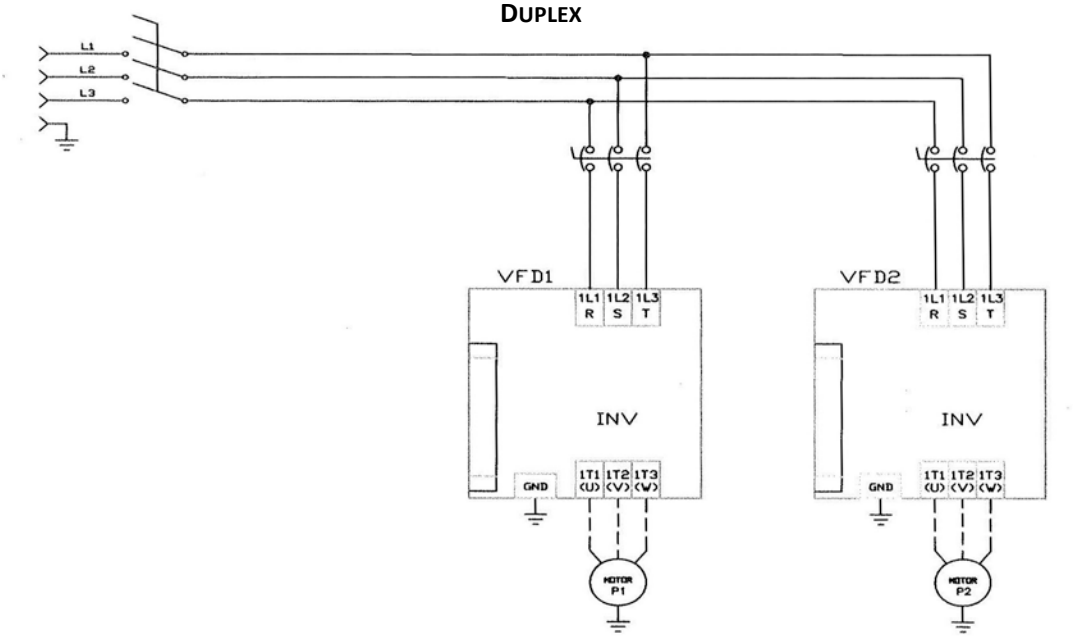

APPROXIMATE FULL LOAD AMPS PER MOTOR

		Horsepower									
		1 ½	2	3	5	7 ½	10	15	20	25	30
Voltage	200	4.6	6.2	7.0	15.4	21.8	28.8	42.1	57.5	69.7	83.5
	230	4.2	5.4	7.8	13.3	19.0	25.0	36.5	50.0	60.5	72.5
	460	2.1	2.7	3.9	6.7	9.5	12.5	18.3	25.0	30.3	36.3

TRIPLEX

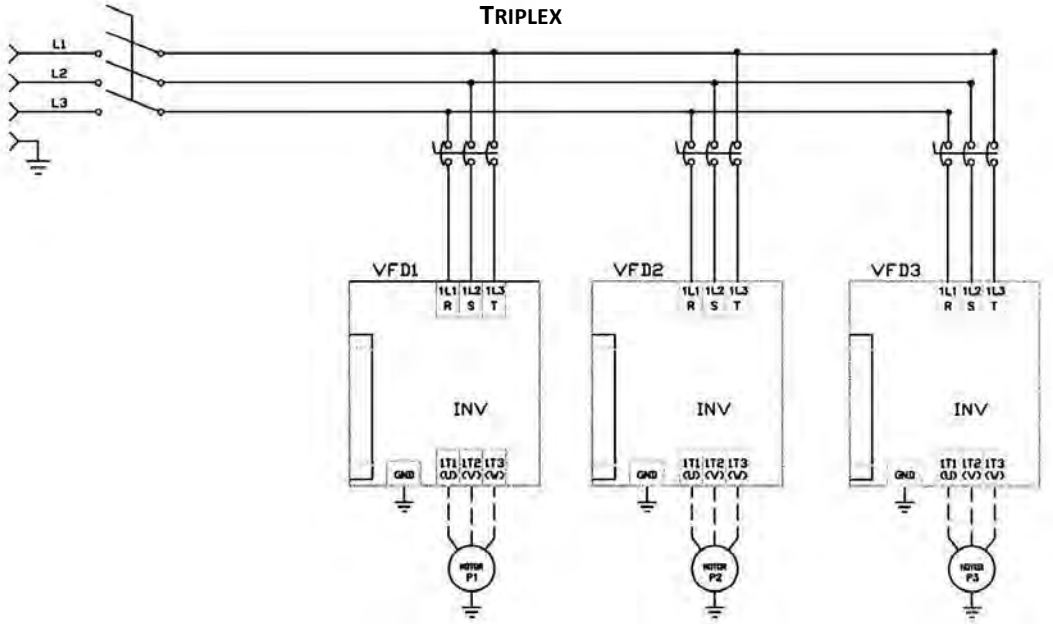

SPECIFY WITH CONFIDENCE, SPECIFY PENN PUMP SYSTEMS

Penn Pump & Equipment Company, Inc., 2880 Bergey Road Unit O, Hatfield, PA 19440, 215-997-6100, (Fax) 215-997-6195, sales@pennpump.com, © 2013

WATER PRESSURE BOOSTER SYSTEMS

SUBMITTAL DATA

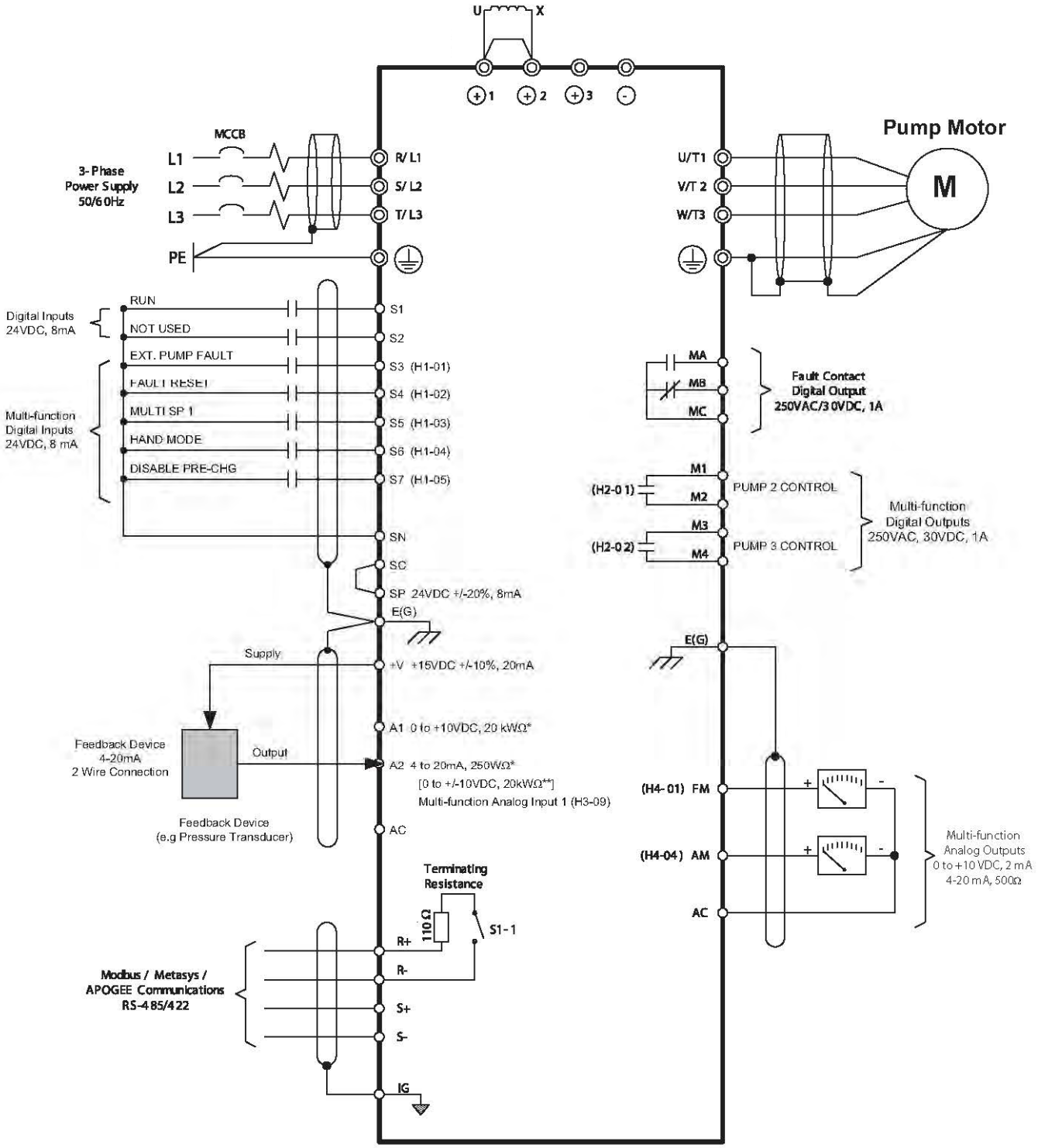

SPECIFY WITH CONFIDENCE, SPECIFY PENN PUMP SYSTEMS

WATER PRESSURE BOOSTER SYSTEMS

SUBMITTAL DATA

FULL PORT, TWO PIECE, BRASS BALL VALVE

Body	Brass
Ball	Chrome plated brass
Seat	PTFE
Pressure Rating	600 PSI

LUG STYLE BUTTERFLY VALVE

Body	Ductile Iron
Stem	416SS
Disc	Aluminum Bronze
Seat	EPDM
Pressure Rating	200 PSI

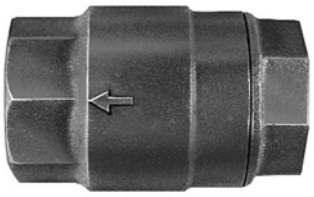

BRONZE SILENT CHECK VALVES

Body	Bronze
Seat	PTFE
Spring	Stainless Steel
Pressure Rating	250 PSI

WAFER TYPE CHECK VALVE

Body	Cast Iron ASTM A126-B
Trim	Bronze ASTM B62/316 SS
Spring	302 Stainless Steel, ASTM A276
Pressure Rating	250 PSI

SPECIFY WITH CONFIDENCE, SPECIFY PENN PUMP SYSTEMS

Penn Pump & Equipment Company, Inc., 2880 Bergey Road Unit O, Hatfield, PA 19440, 215-997-6100, (Fax) 215-997-6195, sales@pennpump.com, © 2013

WATER PRESSURE BOOSTER SYSTEMS

SUBMITTAL DATA

HYDRO-CUSH TANK

Capacity	44 Gallons Standard	☐ 86 Gallons Optional
System Connection	Stainless Steel	
Diaphragm	Butyl	
Liner	Polypropylene	
Pressure Rating	150 PSIG	

PRESSURE RELIEF VALVE

Body	Bronze
Seat	Bronze
Valve	Stainless Steel
Pressure Rating	150 PSIG

THERMAL PURGE VALVE

Body	Brass
Seat	Brass
Spring	300 Series Stainless Steel
Seal	Buna-N
Pressure Rating	300 PSIG
Set Temperature	105°F

PRESSURE GAUGE

Case	Stainless Steel
Bourdon Tube	Brass
Size	4 ½" Dial
Face	Glass

SPECIFY WITH CONFIDENCE, SPECIFY PENN PUMP SYSTEMS

Penn Pump & Equipment Company, Inc., 2880 Bergey Road Unit O, Hatfield, PA 19440, 215-997-6100, (Fax) 215-997-6195, sales@pennpump.com, © 2013