William Kenoi
*Mayor*

Daryn S Arai
*Acting Planning Director*

8 - 83

# County of Hawaii

PLANNING DEPARTMENT
Aupuni Center • 101 Pauahi Street, Suite 3 • Hilo, Hawaii 96720
Phone (808) 961-8288 • Fax (808) 961-8742

RECEIVED
2009 JAN 27 A1:36

January 23, 2009

Ms. Katherine Puana Kealoha, Director
Office of Environmental Quality Control
235 South Beretania Street, Suite 702
Honolulu, HI 96813

Dear Ms. Kealoha:

**RE: Final Environmental Assessment/FONSI Determination**
**Hilo Family Entertainment Center**
**TMK: (3) 2-2-030:017 & 019, Waiākea, South Hilo, Island of Hawai'i**

The County of Hawai'i Planning Department has reviewed the final environmental assessment for the subject project and has made a Finding of No Significant Impact (FONSI) determination. Please publish notice of availability for this project in the next available Environmental Notice on February 8, 2009.

Enclosed are a completed OEQC publication form, project summary, two copies of the final EA, and one CD. In addition, on January 22, 2009, we provided (by e-mail) a copy the OEQC publication form and project summary. Please call Norman Hayashi or Maija Cottle of this department at 961-8288 if you have any questions.

Sincerely,

DARYN S. ARAI
Acting Planning Director

MJC:smn
P:\wpwin60\Maija\Letters\OEQC\Hilo Family Entertainment Center Final EA.doc

Enclosures

cc w/o enclosures: Mr. Norman Hayashi, Planning Division
Ms. Catie Fernandez, PBR Hawaii & Associates, Inc.

# Hilo Family Entertainment Center

## Final Environmental Assessment

February 2009

Prepared for:
Approving Authority,
Hawai'i County Planning Department
&
Applicant,
Ho'oluana Place, LLC

Prepared by:

PBR HAWAII
& ASSOCIATES, INC.

# HILO FAMILY ENTERTAINMENT CENTER

## FINAL ENVIRONMENTAL ASSESSMENT

February 2009

Prepared for:
Approving Authority,
Hawai'i County Planning Department
&
Applicant,
Ho'oluana Place, LLC

Prepared by:

PBR HAWAII
& ASSOCIATES, INC.

# TABLE OF CONTENTS

**1.0 INTRODUCTION ..... 1**
1.1 SUMMARY ..... 1
1.2 APPLICANT ..... 2
1.3 OWNERSHIP ..... 2
1.4 MAJOR APPROVALS REQUIRED ..... 2
**2.0 Hilo Family Entertainment Center DESCRIPTION ..... 3**
2.1 DESCRIPTION OF THE PROPERTY ..... 3
2.2 CURRENT LAND USES ..... 3
2.3 SURROUNDING LAND USES ..... 3
2.4 LAND USE HISTORY ..... 3
2.5 HILO FAMILY ENTERTAINMENT CENTER ..... 3
2.6 OBJECTIVES ..... 4
*2.6.1 Feasibility ..... 4*
*2.6.2 Site Development ..... 4*
2.7 PHASING AND TIMING ..... 4
2.8 COST ..... 5
**3.0 ASSESSMENT OF THE EXISTING NATURAL ENVIRONMENT, POTENTIAL IMPACTS AND MITIGATION MEASURES ..... 7**
3.1 CLIMATE ..... 7
3.2 GEOLOGY AND TOPOGRAPHY ..... 7
3.3 DRAINAGE & SOILS ..... 8
3.4 AGRICULTURAL IMPACT ..... 9
3.5 GROUNDWATER RESOURCES/HYDROLOGY ..... 9
3.6 NATURAL HAZARDS ..... 9
3.7 FLORA AND FAUNA ..... 10
*3.7.1 Flora ..... 10*
*3.7.2 Fauna ..... 11*
**4.0 ASSESSMENT OF THE EXISTING HUMAN ENVIRONMENT, POTENTIAL IMPACTS AND MITIGATION MEASURES ..... 13**
4.1 ARCHAEOLOGICAL AND HISTORIC RESOURCES ..... 13
4.2 CULTURAL RESOURCES ..... 14
4.3 NOISE ..... 15
4.4 AIR QUALITY ..... 16
4.5 MAN-MADE HAZARDS ..... 17
4.6 VISUAL RESOURCES AND OPEN SPACE ..... 19
4.7 POPULATION & SOCIAL BENEFITS ..... 19
4.8 ECONOMIC CHARACTERISTICS ..... 19
4.9 INFRASTRUCTURE ..... 20
*4.9.1 Utilities ..... 20*
*4.9.2 Water Supply and Distribution ..... 20*
*4.9.3 Wastewater Collection and Transmission ..... 21*
*4.9.4 Drainage Facilities ..... 21*
4.10 TRANSPORTATION FACILITIES AND TRAFFIC ..... 22
4.11 SOLID WASTE DISPOSAL FACILITIES ..... 24
4.12 EMERGENCY SERVICES ..... 25
4.13 RECREATIONAL FACILITIES ..... 25

**5.0 RELATIONSHIP TO PLANS AND POLICIES ..... 27**
5.1 STATE OF HAWAIŸI ..... 27
*5.1.1 Chapter 343, Hawai'i Revised Statues ..... 27*
*5.1.2 State Land Use Law, Chapter 205, Hawai'i Revised Statues ..... 27*
*5.1.3 Coastal Zone Management Act, Chapter 205A, Hawai'i Revised Statutes ..... 27*
5.2 COUNTY OF HAWAIŸI ..... 29
*5.2.1 General Plan ..... 29*
*5.2.2 Hawai'i County Zoning ..... 35*
*5.2.3 Special Management Area ..... 35*
5.3 REQUIRED PERMITS AND APPROVALS ..... 36
**6.0 ALTERNATIVES ..... 37**
6.1 "NO-ACTION" ALTERNATIVE ..... 37
6.2 ALTERNATIVE USES ..... 37
**7.0 DETERMINATION, FINDINGS, AND REASONS FOR SUPPORTING DETERMINATION ..... 39**
7.1 SIGNIFICANCE CRITERIA ..... 39
7.2 DETERMINATION ..... 41
**8.0 CONSULTED PARTIES ..... 43**
8.1 AGENCIES CONSULTED IN THE PREPARATION OF THE DEA ..... 43
8.2 COMMENTS TO THE DRAFT ENVIRONMENTAL ASSESSMENT ..... 43
**9.0 REFERENCES ..... 45**

# LIST OF FIGURES

| FIGURE | | FOLLOWS PAGE |
|---|---|---|
| 1 | Preliminary Site Plan | 2 |
| 2 | Site Photographs | 2 |
| 3 | Regional Location Map | 2 |
| 4 | Tax Map Key (TMK) Map | 2 |
| 5 | Land Use Pattern Allocation Guide for the Island of Hawai‘i | 2 |
| 6 | Hawai‘i County Zoning | 2 |
| 7 | State Land Use Districts | 2 |
| 8 | Special Management Area | 2 |
| 9 | Flood Insurance Rate Map | 8 |
| 10 | Natural Resources Conservation Service Soil Classification Map | 8 |
| 11 | Tsunami Evacuation Zone | 10 |

# LIST OF APPENDICES

Appendix A Pre-consultation Correspondence
Appendix B Draft Environmental Assessment Comment Letters and Responses
Appendix C Civil Engineering Report
Appendix D Flora & Fauna Study (Rana Productions)
Appendix E Archeological Assessment Report (Alan Haun & Associates)
Appendix F Cultural Impact Assessment
Appendix G Traffic Impact Analysis

# LIST OF ACRONYMS

The following is a list of terms, abbreviations, and acronyms used in this document.

| | |
|---|---|
| ADA | Americans with Disabilities Act |
| BMPs | Best Management Practices |
| CERCLIS | Comprehensive Environmental Response, Compensation, and Liability Information System |
| CG-7.5 | General Commercial (County Zoning District) |
| DOH | State of Hawai‘i Department of Health |
| EA | Environmental Assessment |
| EPA | United States Environmental Protection Agency |
| FEIS | Final Environmental Impact Statement |
| FEMA | Federal Emergency Management Agency |
| FIRM | Flood Insurance Rate Map |
| FONSI | Finding of No Significant Impact |
| HAR | Hawai‘i Administrative Rules |
| HEER | State of Hawai‘i Hazard Evaluation and Emergency Response Office |
| HFEC | Hilo Family Entertainment Center |
| HDU | High Density Use |
| HRS | Hawai‘i Revised Statutes |
| LOS | Level of Service |
| LUC | Land Use Commission |
| LUPAG | County of Hawai‘i General Plan Land Use Pattern Allocation Guide |
| NPDES | National Pollutant Discharge Elimination System |
| ppm | Parts Per Million |
| ROW | Right of Way |
| SMA | Special Management Area |
| TIAR | Traffic Impact Analysis Report |
| TMK | Tax Map Key |
| V-.75 | Resort-Hotel (County Zoning District) |

# 1.0 INTRODUCTION

## 1.1 SUMMARY

Ho‘oluana Place LLC wishes to develop a family entertainment center centered around a new bowling alley with new restaurants and retail shops, in central Hilo. A site plan for the Hilo Family Entertainment Center is provided as Figure 1. Presently the site is vacant and overgrown with vegetation as shown in site photographs, Figure 2.

The Hilo Family Entertainment Center will include infrastructure improvements that will utilize County road rights-of-ways. The use of County lands triggers an environmental requirement for the preparation of an environmental assessment (EA) in compliance with Chapter 343, HRS. The site is also within the Special Management Area (SMA). As such development will require a SMA Use permit in compliance with Chapter 205A, HRS. The following summary describes the project location, existing entitlements, and proposed action:

| | |
|---|---|
| **Project Name:** | Hilo Family Entertainment Center |
| **Proposing and Approving Agency**: | County of Hawai‘i Planning Department |
| **Location:** | Kekūanaō‘a and Mililani Streets, Hilo, Hawai‘i (Figure 3) |
| **Tax Map Key and Land Area:** | TMK: (3) 2-2-30: 17 & 19<br>6.23 acres (Figure 4) |
| **Landowners:** | Ho‘oluana Place LLC and David De Luz, Sr. (private) |
| **Existing Use:** | Vacant with overgrown vegetation |
| **Proposed Use:** | Construction of a family entertainment center, including a bowling alley, restaurants, and retail shops |
| **Land Use Designations:** | Land Use Pattern Allocation Guide (LUPAG) –High Density Urban (HDU) (Figure 5)<br>County Zoning: V-.75 Resort-Hotel zoning and CG-7.5 (Figure 6)<br>State Land Use District: Urban (Figure 7) |
| **Special Designations:** | In the Special Management Area (SMA) (Figure 8);<br>Not on state or national register of historic places or in an historic district |
| **Determination:** | Finding of No Significant Impact (FONSI) |
| **Agencies Consulted:** | See Chapter 8, Appendix A and Appendix B. |

## 1.2 APPLICANT

The applicant is Ho‘oluana Place LLC. The mailing addresses and primary contact person is listed below:

Ho‘oluana Place LLC
c/o Mr. Thomas H. Yamamoto
P.O. Box 6150
Kamuela, HI 96743
Phone: (808) 885-3411
Fax: (808) 885-1622

## 1.3 OWNERSHIP

Ho‘oluana Place LLC and David De Luz, Sr. own parcels to be developed (Figure 4). The following table shows ownership. Acreages given below are approximate (rounded).

| LANDOWNER | AREA (ACRES) | PARCEL NO. (TMK PLAT: 2-2-30) |
|---|---|---|
| Ho‘oluana Place LLC | 4.4 | 17 |
| David De Luz, Sr. | 1.8 | 19 |
| **TOTAL AREA (APPROXIMATE)** | 6.2 | |

## 1.4 MAJOR APPROVALS REQUIRED

The following is a preliminary list of major approvals and permits that may be required for the implementation of the Hilo Family Entertainment Center.

| Permit or Approval | Approving Authority |
|---|---|
| Chapter 343, HRS | Hawai‘i County Planning Department |
| Special Management Area Use Permit | Hawai‘i County Planning Department |
| Plan Approval | Hawai‘i County Planning Department |
| National Pollutant Discharge Elimination System (NPDES) | State Department of Health |
| Grading/Building Permits | Hawai‘i County Department of Public Works |

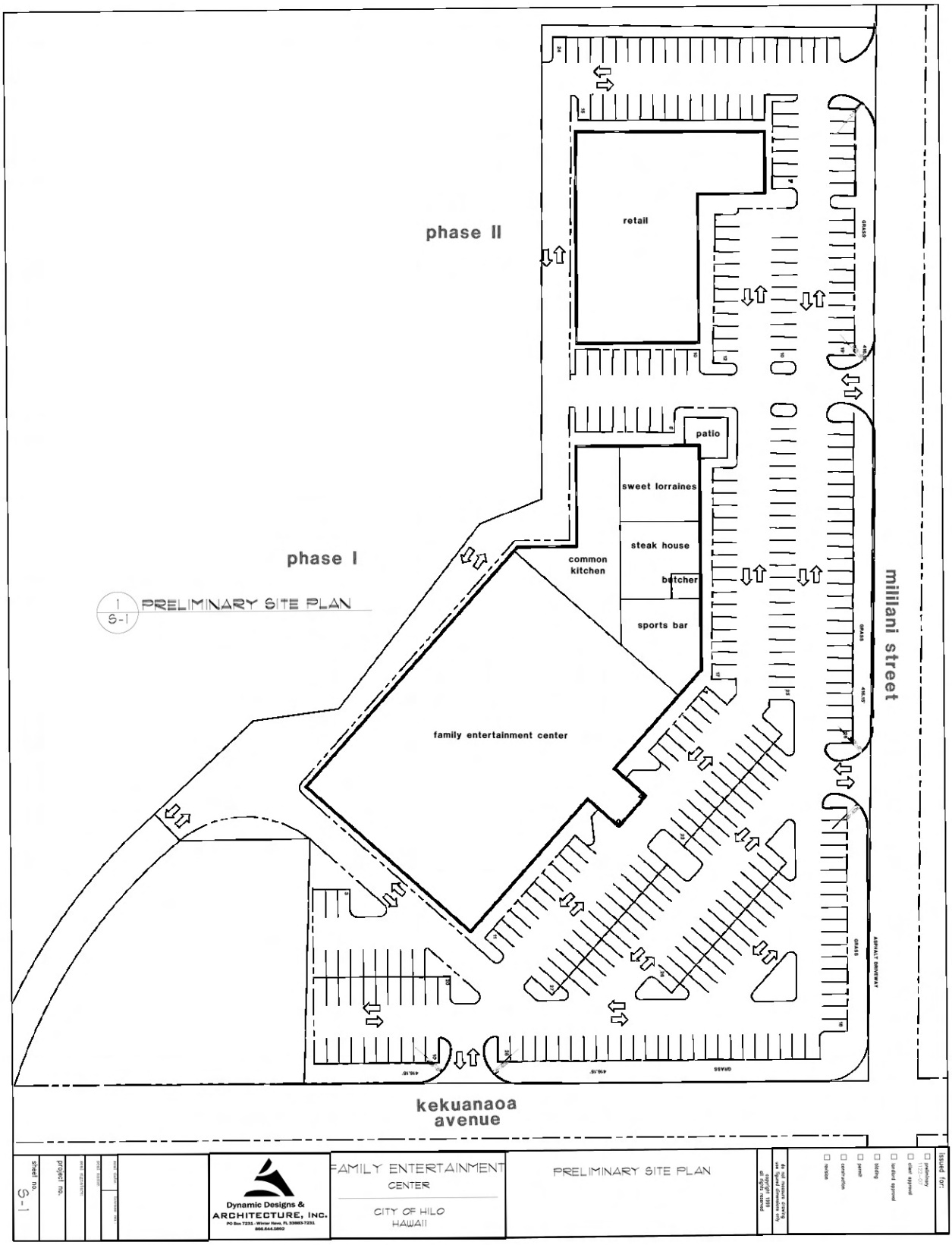


Disclaimer: This graphic has been prepared for general planning purposes only.

**FIGURE 1**

Preliminary Site Plan

# Hilo Family Entertainment Center

Hooluana Place, LLC

ISLAND OF HAWAI'I

NORTH

LINEAR SCALE (FEET)

0 60 180

PBR HAWAII & ASSOCIATES, INC.

1. View looking southwest from Hualani Street (NE corner of the property). The Credit Union (CU) is in the background.

2. View from Mililani Street (east boundary of the property) looking northwest; Waiakea Villas are in the background.

3. View from the NE corner of property looking south toward tennis court; manmade drainage ditch is in the foreground.

4. View from Kekūanaō'a Street at the SW corner of the property looking NE; the grass lawn is in the foreground.

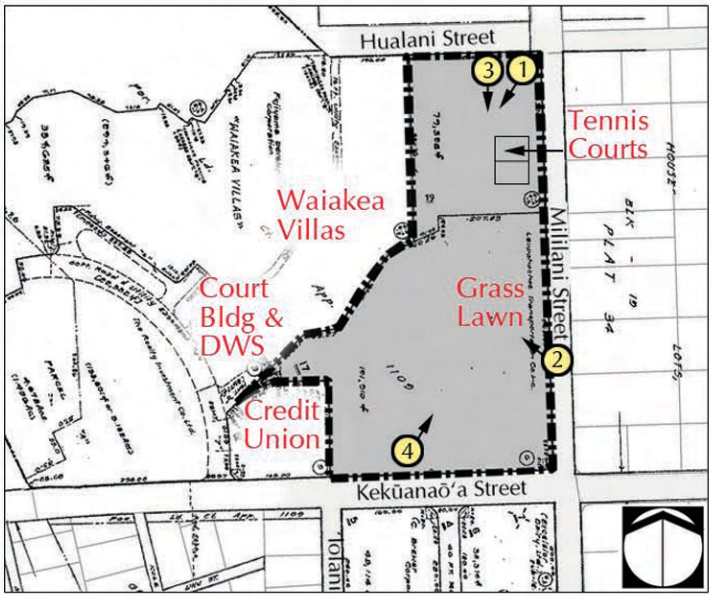


*Map Key*

**FIGURE 2**

Site Photographs

## Hilo Family Entertainment Center

Hooluana Place, LLC

ISLAND OF HAWAI'I

PBR HAWAII & ASSOCIATES, INC.

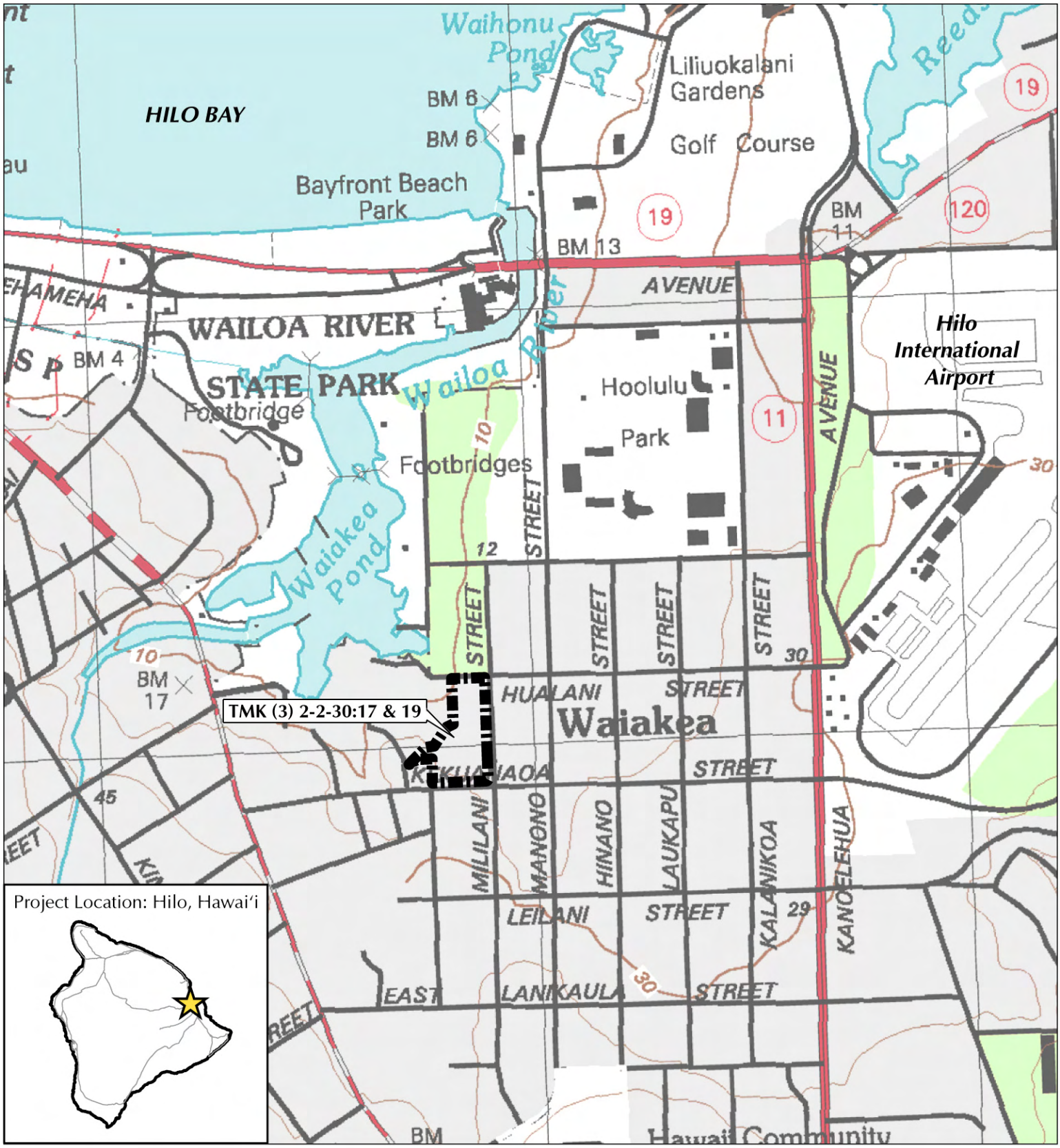


**Legend**

Hilo Family Entertainment Center

**FIGURE 3**

Regional Location

## Hilo Family Entertainment Center

Hooluana Place, LLC

ISLAND OF HAWAI'I

NORTH

LINEAR SCALE (FEET)

0 500 1,000 2,000

PBR HAWAII & ASSOCIATES, INC.

Source: U.S.Geological Survey, 2004

Disclaimer: This graphic has been prepared for general planning purposes only.

**Legend**

Hilo Family Entertainment Center

**FIGURE 4**

Tax Map Keys (3) 2-2-30:17 & 19

# Hilo Family Entertainment Center

Hooluana Place, LLC

ISLAND OF HAWAI'I

NORTH

LINEAR SCALE (FEET)

0 150 300 600

PBR HAWAII & ASSOCIATES, INC.

Source: County of Hawai'i Tax Maps, 2007

Disclaimer: This graphic has been prepared for general planning purposes only.

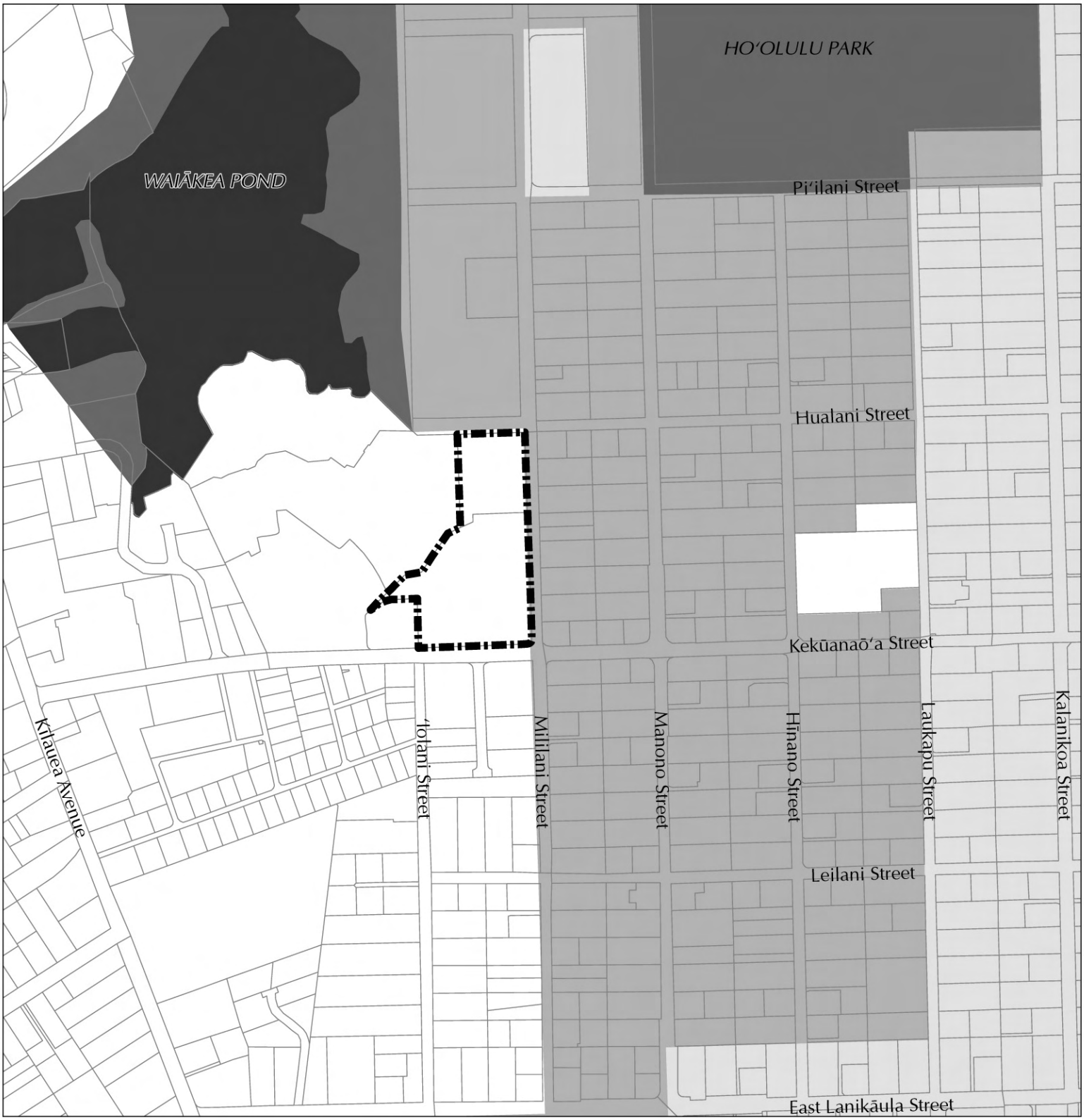


**Legend**

- Hilo Family Entertainment Center
- Conservation
- High Density Urban
- Industrial
- Medium Density Industrial
- Open Area

Source: County of Hawai'i, 2005
Disclaimer: This graphic has been prepared for general planning purposes only.

**FIGURE 5**

Land Use Allocation Guide
for the Island of Hawa'i

## Hilo Family Entertainment Center

Hooluana Place, LLC

ISLAND OF HAWAI'I

NORTH

LINEAR SCALE (FEET)

0 250 500 1,000

PBR HAWAII & ASSOCIATES, INC.

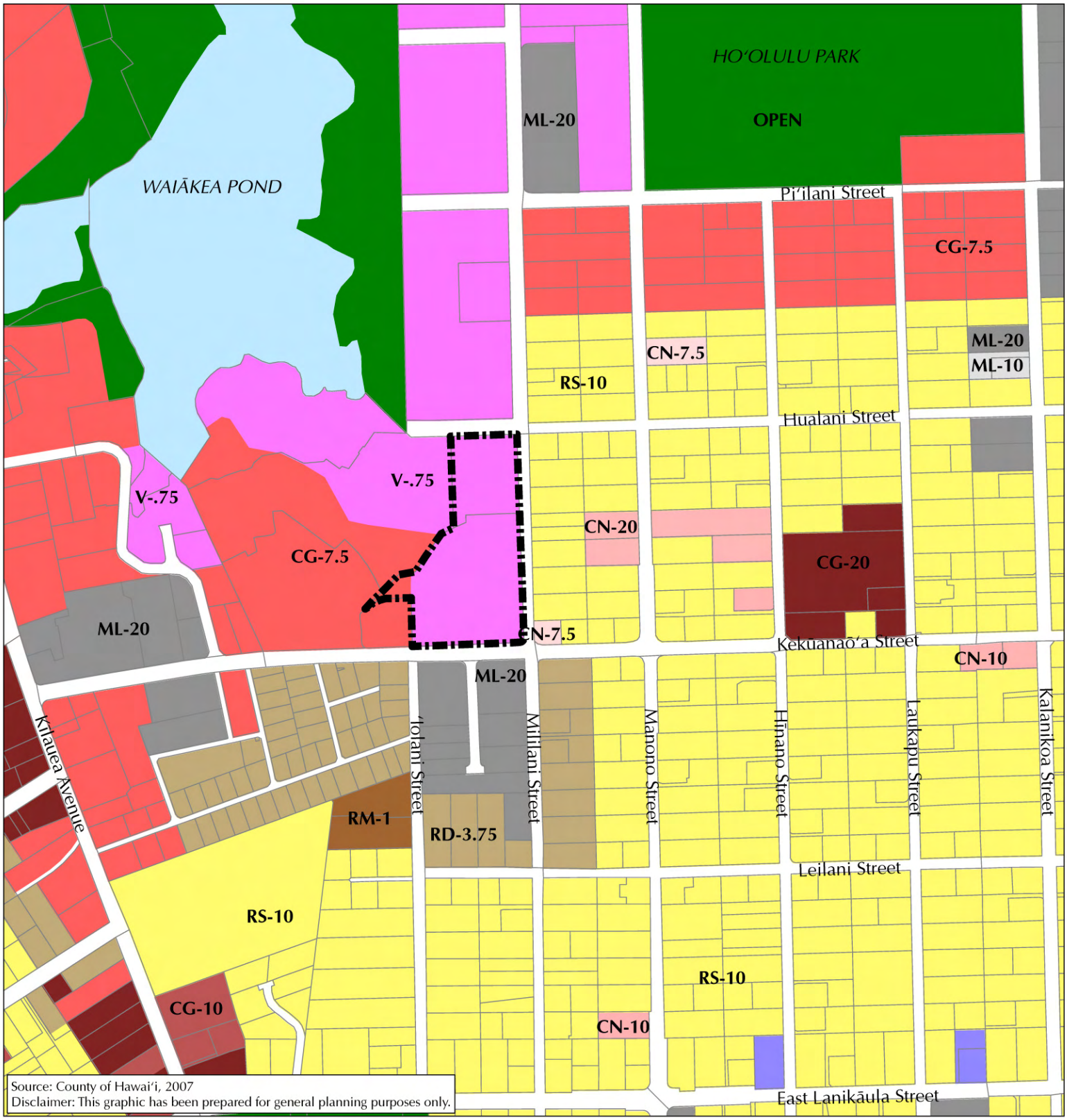


**Legend**

Hilo Family Entertainment Center

CG-10
CG-20
CG-7.5
CN-10
CN-20
CN-7.5
ML-10
ML-20
RD-3.75
RM-1
RS-10
RS-7.5
MCX-20
V-.75
Pond
OPEN

**FIGURE 6**

Hawai'i County Zoning

## Hilo Family Entertainment Center

Hooluana Place, LLC

ISLAND OF HAWAI'I

NORTH

LINEAR SCALE (FEET)

0 250 500 1,000

PBR HAWAII & ASSOCIATES, INC.

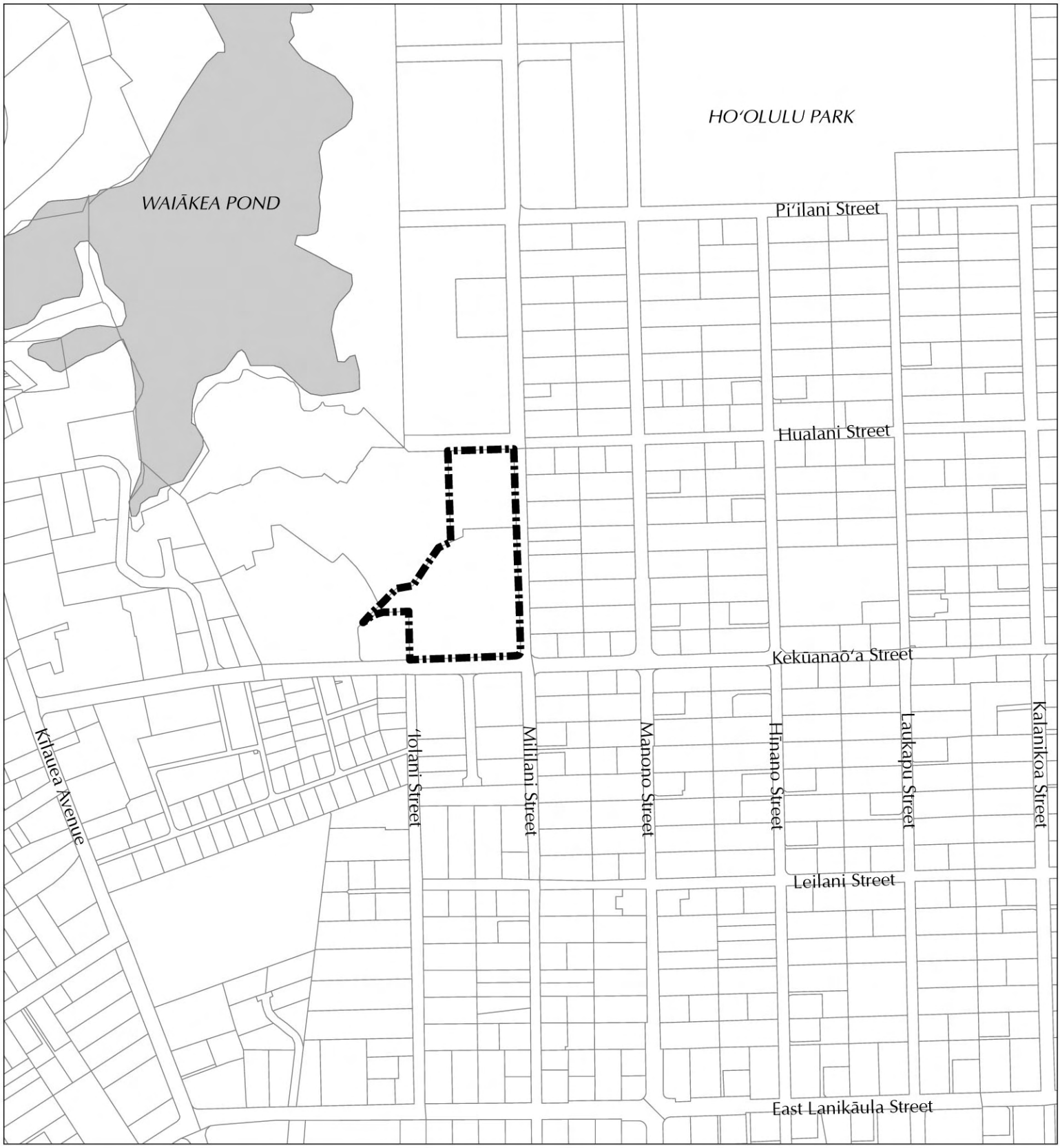


**Legend**

Hilo Family Entertainment Center

Urban

Conservation

Source: State Land Use Commission, 2004
Disclaimer: This graphic has been prepared for general planning purposes only.

**FIGURE 7**

State Land Use Districts

## Hilo Family Entertainment Center

Hooluana Place, LLC

ISLAND OF HAWAI'I

NORTH

LINEAR SCALE (FEET)

0 250 500 1,000

PBR HAWAII & ASSOCIATES, INC.

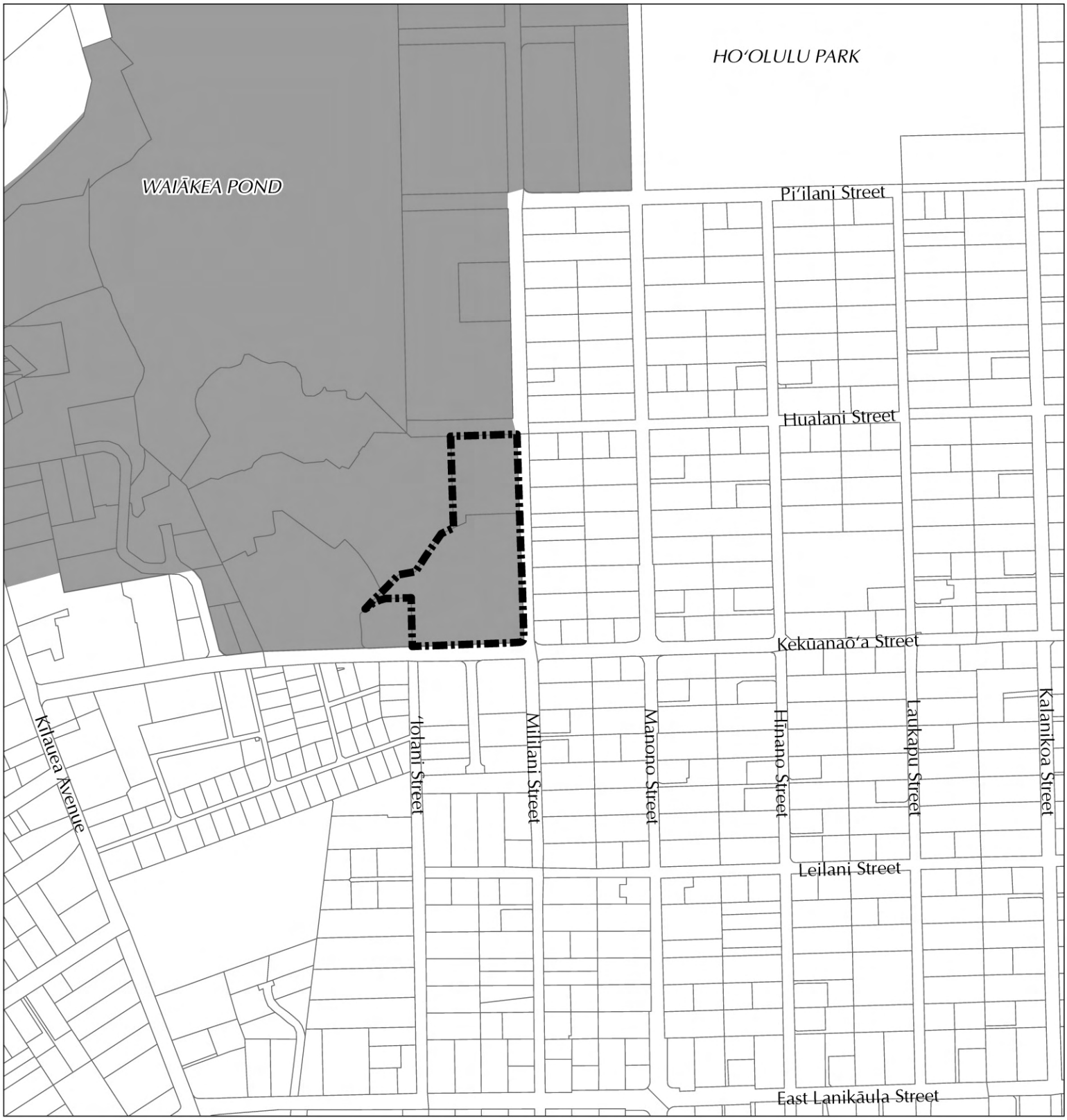


**Legend**

- Hilo Family Entertainment Center
- Not Within the Special Management Area
- Within the Special Management Area

**FIGURE 8**

Special Management Area

## Hilo Family Entertainment Center

Hooluana Place, LLC

ISLAND OF HAWAI'I

NORTH

LINEAR SCALE (FEET)

0 250 500 1,000

PBR HAWAII & ASSOCIATES, INC.

Source: County of Hawai'i Planning Department, 2006

Disclaimer: This graphic has been prepared for general planning purposes only.

# 2.0 HILO FAMILY ENTERTAINMENT CENTER DESCRIPTION

## 2.1 DESCRIPTION OF THE PROPERTY

The Hilo Family Entertainment Center site is situated in the *ahupua'a* of Waiākea in South Hilo District. The site is in Hilo and consists of an irregularly-shaped 6.2-acre property comprised of two TMK parcels (TMK: (3) 2-2-30: 17 & TMK: (3) 2-2-30: 19) (Figure 4) bordered by Hualani Street to the north, Mililani Street to the east, Kekūanaō'a Street to the south and by the Waiākea Villas apartment and office/retail complex to the west. Further northeast (makai) are the Waiākea Lagoons.

## 2.2 CURRENT LAND USES

The Hilo Family Entertainment Center site is mostly vacant and overgrown. See Figure 2, site photos.

## 2.3 SURROUNDING LAND USES

To the east side are residential dwellings. To the south are fairly well developed properties with a mixture of both residential dwellings and commercial buildings. To the west are the HT&T Federal Credit Union, a single commercial building, an access road and driveway that serve the County of Hawai'i Department of Water Supply building and the upper parking lot for the Waiākea Villas. Waiākea Villas is a condo/apartment complex with commercial/office uses (a real estate office, a dance club and a karaoke lounge). The parking lot for the credit union borders the HFEC property. To the north (across Hualani Street) is a neighboring undeveloped property that borders the Waiākea Lagoons.

## 2.4 LAND USE HISTORY

Sandalwood, whaling, industrial and commercial concerns, agriculture, milling and sugar plantations were established in the 1800s in this area. Waiākea Mill began production in 1879. The mill took ownership of the land in 1903. The industrial area was expanded in 1932 when a plant opened there to produce wall boards for buildings using bagasse (a plant byproduct of sugar cane processing). The mill stopped producing sugar in 1947, but bagasse production continued until 1966. A hotel complex was built on the disassembled plant and mill site, and that eventually became the Waiākea Villas apartment and office complex that exists there today. There are no standing remnants of the mill.

## 2.5 HILO FAMILY ENTERTAINMENT CENTER

Ho'oluana Place LLC wishes to develop a family entertainment center that will include a new bowling alley with new restaurants and retail shops located at Kekūanaō'a and Mililani Streets, in Hilo, Hawai'i (Figure 1). The center is intended to be a welcome addition to the Hilo community because it is intended to provide entertainment for families.

The Hilo Family Entertainment Center will be constructed in two phases. The first phase will include a family entertainment center, a 37,000+ square foot facility on the Kekūanaō‘a Street end of the property that is proposed to include:

- A bowling alley with approximately 32 lanes
- A 3,000 to 4,000 square foot kids zone with redemption gaming and amusements
- Private birthday party rooms
- 4 to 6 lanes of private bowling for private events and gatherings
- Laser tag center
- Indoor mini golf
- A family restaurant
- Private banquet rooms

The Hilo Family Entertainment Center will be joined physically to five other commercial entities totaling about 15,000 square feet, to possibly include a high-turnover restaurant, an upscale restaurant, a sports bar with a karaoke stage, a common kitchen, and a butcher shop. There will be a total of 288 parking stalls.

The second phase will be an approximately 16,000 square foot retail facility with 54 parking spaces, to be located at the Hualani Street end of the property.

## 2.6 OBJECTIVES

### 2.6.1 Feasibility

Ho‘oluana Place LLC believes that there is a demand for a place where youth and families can gather for indoor recreational activities. The opportunities for family recreational activities are limited in the Hilo area. The Hilo Family Entertainment Center will satisfy a need for quality family-orientated indoor recreational activities in the Hilo area.

### 2.6.2 Site Development

The property is currently zoned for resort and commercial use and can be serviced by nearby utilities.

The final layout and configuration of the Hilo Family Entertainment Center will be refined through the planning, engineering, and design process to ensure that use of the property will be consistent with surrounding land uses.

Guidelines for sustainable building design, landscaping with native plants, and the use of glassphalt will be considered and, wherever appropriate, incorporated.

## 2.7 PHASING AND TIMING

The Hilo Family Entertainment Center will be completed in two phases (Figure 1). The first phase will be the development of a family entertainment complex, a high-turnover restaurant, an

upscale restaurant, a sports bar with a karaoke stage and back-of-house food and beverage services (kitchen and butcher) for the adjacent retail outlets. The second phase consists of the development of the makai portion of the property with an approximately 16,000 square foot facility for retail uses. Construction of Phase I is expected to commence after all approvals and permits are received. Phase I construction is expected to be completed within approximately 14 months. The start of Phase II construction will be based on demand and is estimated to be of similar duration as Phase I.

## 2.8 COST

Total cost of the Hilo Family Entertainment Center is estimated to be approximately $11 million. The Hilo Family Entertainment Center will be financed entirely by private sources.

(this page intentionally left blank)

# 3.0 ASSESSMENT OF THE EXISTING NATURAL ENVIRONMENT, POTENTIAL IMPACTS AND MITIGATION MEASURES

The following describes the existing natural environment associated with the property and potential impacts that may result from the development. Mitigation measures to address potential impacts are also described as applicable.

## 3.1 CLIMATE

***Existing Conditions***

The climate of Hawai‘i Island is influenced by its geologic features; the island is dominated by Mauna Loa (13,653 foot summit elevation) and Mauna Kea (13,796 foot summit elevation). The annual rainfall in Hilo averages 128 inches with an average high temperature of 81 degrees Fahrenheit and an average low temperature of 66 degrees Fahrenheit.

Tradewinds near the Hilo Family Entertainment Center site are generally more persistent during the summer than in the winter, with stronger winds in the afternoon. The wind pattern for all Hawaiian Islands generally blows in a northeasterly direction. The wind pattern for Hawai‘i Island is further influenced by the local mountains, namely Mauna Loa volcano. In the early morning, the prevailing wind pattern pushes out towards the ocean, and in the afternoon, the winds blow from the ocean towards the island.

***Potential Impacts and Mitigation Measures***

The proposed development is not expected to have an impact on climatic conditions and no mitigation measures are planned.

## 3.2 GEOLOGY AND TOPOGRAPHY

The Hilo Family Entertainment Center site is located on lava flows of Mauna Loa Volcano, part of the youngest flows that were present when Polynesian voyagers discovered Hawai‘i at about A.D. 400. These types of flows are often discontinuous ash deposits.

***Potential Impacts and Mitigation Measures***

Since the topography of the site is moderately sloping, minimal grading will be required. Significant impacts to the area topography are not expected.

A preliminary topographic survey has been conducted for the site indicates that the site is 11 feet above sea level at its lowest elevation, and rises to approximately 27 feet in elevation at the southwest corner of the property nearest the HT & T Credit Union on Kekuanaoa Street.

## 3.3 DRAINAGE & SOILS

The FIRM designation for the Hilo Family Entertainment Center site is "Zone X" or minimal flooding area. The site is not located in either a designated Floodway, 100-year Floodplain or 500-year Floodplain which have been identified by the Federal Emergency Management Agency for areas along Wailoa Stream (Figure 9).

The soils at the site, as classified by the U.S. Department of Agriculture Natural Resources Conservation Service, are Keaukaha Extremely Rocky Muck (rKFD) (Figure 10), 6 to 20 percent slopes. This soil type occurs in Hilo and is undulating to rolling and follows the topography of the underlying pāhoehoe lava. Rock outcrops occupy about 25 percent of the area. The soil above the lava is rapidly permeable, and the pāhoehoe lava is very slowly permeable, with water moving rapidly through the cracks. Runoff is medium, and the erosion is slight. Keaukaha Extremely Rocky Muck lies in Soil Capability class VII. Soils in this class have very severe limitations that make them unsuited to cultivation, and their use is restricted to pasture or range, woodland, or wildlife.

***Potential Impacts and Mitigation Measures***

Runoff: Best management practices will be employed during construction and post-construction to minimize risk of soil erosion and to prevent water quality degradation downstream of the Hilo Family Entertainment Center site. Runoff from the site may contain pollutants associated with typical urban development (rooftops, parking lots). During construction, all grading operations will be conducted in compliance with dust and erosion control requirements of the County Grading Ordinance and applicable provisions of Chapter 11-60.1, HAR (Hawai'i Administrative Rules), Section 11-60.1-33 regarding Fugitive Dust. A watering program will be implemented during construction to minimize soil loss through fugitive dust emission. Other erosion control measures include cleaning job-site construction equipment and establishing of groundcover as quickly as possible after grading. Permanent landscaping will also help to retain soil throughout the property. In addition to construction watering programs and landscaping, other mitigation measures generally associated with best management practices include:

- Early construction of drainage control features;
- Construction of temporary sediment basins to trap silt;
- Use of temporary berms and cut-off ditches where needed; and
- Use of temporary silt fences or straw bale barriers to trap silt.

Ho'oluana Place LLC will comply with HAR, Chapters 11-54 (Water Quality Standards and 11-55 (Water Pollution Control) as implemented by the State Department of Health. A National Pollutant Discharge Elimination System (NPDES) permit will be obtained prior to construction to address point source discharges during construction. Ho'oluana Place LLC is also considering additional stormwater quality management methods such as the use of oil water separators for the drywells located within parking areas.

Any net increase of runoff from impermeable surfaces such as roads, parking lots and rooftops associated with the Hilo Family Entertainment Center can be dealt with using drywells in

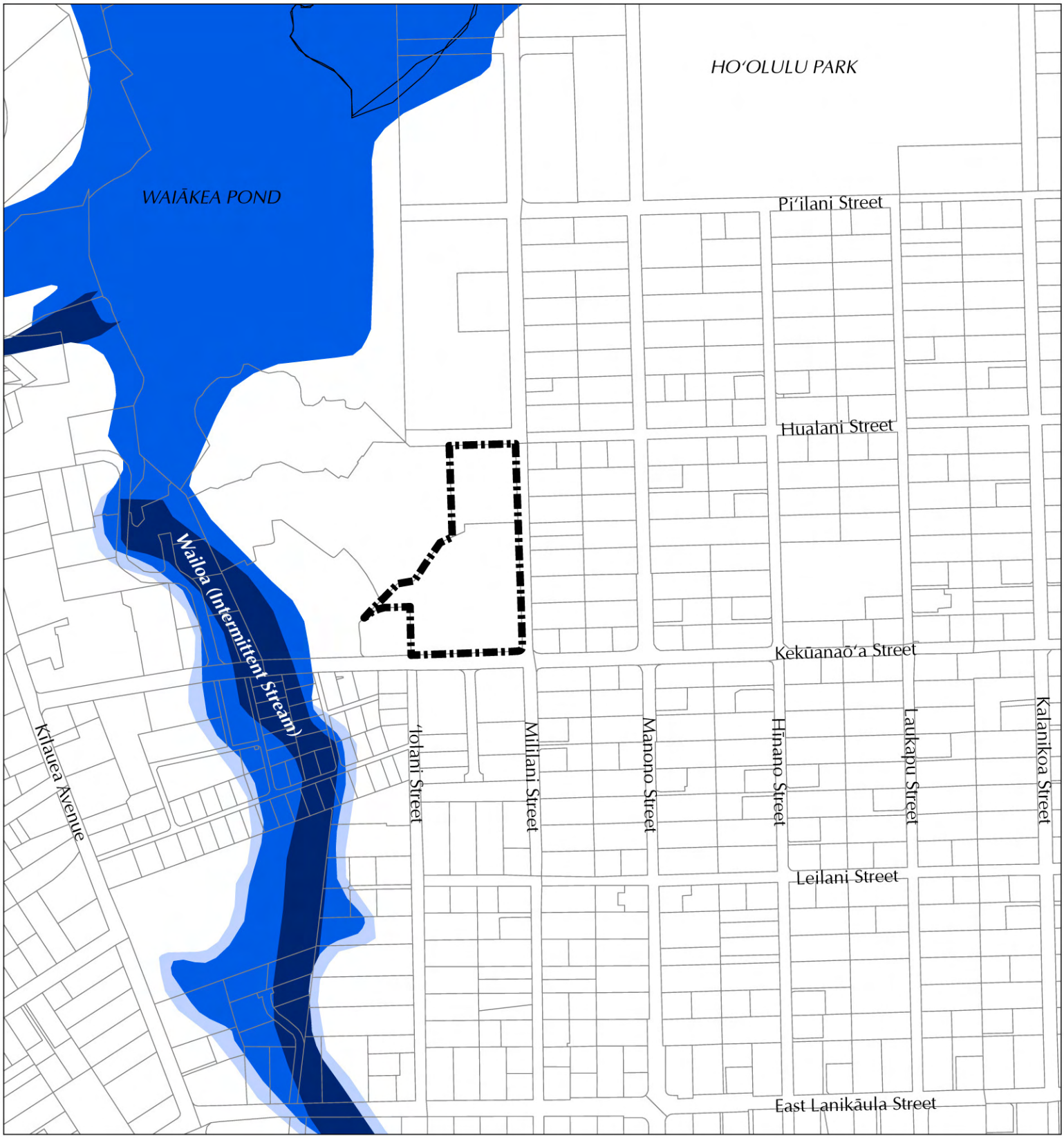


**Legend**

- Hilo Family Entertainment Center
- Zone X: Minimal Flooding Area
- Zone X-500: 500-Year Floodplain
- Zone A: 100-Year Floodplain
- Floodway

Source: Federal Emergency Management Agency,1970
Disclaimer: This graphic has been prepared for general planning purposes only.

**FIGURE 9**

Flood Insurance Rate Map

## Hilo Family Entertainment Center

Hooluana Place, LLC

ISLAND OF HAWAI'I

NORTH

LINEAR SCALE (FEET)

0 250 500 1,000

PBR HAWAII & ASSOCIATES, INC.

**Legend**

- Hilo Family Entertainment Center
- Water
- OlD: 'Ōla'a extremely stony silty clay loam, 0-20% slopes
- rKFD: Keaukaha extremely rocky muck, 6-20% slopes
- rPAE: Pāpa'i extremely stony muck, 3-25% slopes

Source: Natural Resources Conservation Service, 2007
Disclaimer: This graphic has been prepared for general planning purposes only.

**FIGURE 10**

Natural Resources Conservation Service
Soil Classification

## Hilo Family Entertainment Center

Hooluana Place, LLC

ISLAND OF HAWAI'I

NORTH

LINEAR SCALE (FEET)

0 250 500 1,000

PBR HAWAII & ASSOCIATES, INC.

combination with water quality techniques as described further in this report and in Appendix C, Civil Engineering Report.

## 3.4 AGRICULTURAL IMPACT

According to the National Resources Conservation Service, the soil at this site is not suited for agricultural purposes. See the soils description in the previous section.

***Potential Impacts and Mitigation Measures***

Since the site does not contain soils suited for agricultural purposes and has not been used for cultivation for the last half century, the development will not affect the area's agricultural activity, nor will it reduce the inventory of available agricultural lands in Hawai'i or statewide.

## 3.5 GROUNDWATER RESOURCES/HYDROLOGY

The source of water in the Hilo area is the Hilo Aquifer System, which has a sustainable yield of 347 million gallons per day (mgd). The current pumpage from Hilo City wells (Pana'ewa No. 1, 2, and 3; Pi'ihonua #3A and 3B; and Saddle Road) is 9.999 mgd.

***Potential Impacts and Mitigation Measures***

At full build-out, total water demand from the Hilo Family Entertainment Center is estimated to be 0.014 mgd.

As other projects are developed and the de facto population of Hilo grows, overall water demand will increase. However, given the current low rate of pumpage, even with the Hilo Family Entertainment Center, the available supply is adequate.

Ho'oluana Place LLC and its civil engineering consultant will coordinate with the County Department of Water Supply regarding the Hilo Family Entertainment Center's water requirements during the project design phase.

## 3.6 NATURAL HAZARDS

All developments on the island are subject to the risk of natural hazards such as earthquakes, volcanic eruptions, flooding, and hurricanes. The entire island of Hawai'i is designated Seismic Zone 4. The rating system uses a scale of 1 to 4, with Zone 4 being most at risk for seismic hazard. The Hawai'i County building code requires that all new structures be designed to resist forces to seismic Zone 4. According to the USGS Lava Flow Hazard Maps, the site is located within Hazard Zone 3. These are areas are some distance from recently active vents or separated by topography that would make it less likely that lava will cover these areas.

Since 1982, Hawai'i has been affected twice by devastating hurricanes, 'Iwa in 1982 and 'Iniki in 1992. While it is difficult to predict these natural occurrences, it is reasonable to assume that events could be likely. The Hilo area is no more or less vulnerable than the rest of the island to the destructive winds and torrential rains associated with hurricanes and cyclones.

Flood hazards are primarily identified by the Flood Insurance Rate Map (FIRM) prepared by the Federal Emergency Management Agency (FEMA). The Hilo Family Entertainment Center site is outside all FEMA flood designations and is listed on the FIRM map as "Zone X" or minimal flooding area.

Tsunamis are large, rapidly moving ocean waves triggered by a major disturbance of the ocean floor, which is usually caused by an earthquake but sometimes can be produced by a submarine landslide or a volcanic eruption. About 50 tsunamis have been reported in the Hawaiian Islands since the early 1800s. Seven caused major damage, and two of these were locally generated. The Hilo Family Entertainment Center site is within the Tsunami Evacuation Zone. (Figure 11).

***Potential Impacts and Mitigation Measures***

Mitigation of hazards associated with earthquakes, hurricanes, and tsunamis include adherence to Uniform Building Code adopted by the County to minimize potential damage to structures. Impacts from hurricanes and tsunamis can be further mitigated by adherence to appropriate County and State civil defense evacuation procedures. The Waiākea High School Gym, located at 155 W. Kāwili Street, approximately one mile west of the Hilo Family Entertainment Center site, is a designated emergency evacuation center for the area.

The site does not contain a soil type that indicates slippage, nor does it have a high flood risk potential.

## 3.7 FLORA AND FAUNA

### 3.7.1 Flora

Rana Productions conducted a survey of botanical species on the property in February 2008. Appendix D contains the complete report.

No endemic species, or any species currently listed as threatened, endangered or proposed for listing under either the federal or State of Hawai'i endangered species statutes were recorded on the site. Only four species, *'Uhaloa* (*Waltheria indica*), *Pakahakaha* fern (*Lepisorus thunbergianus*), the sedge (*Fimbristylis dichotoma*) and Itchy crabgrass (*Digitaria setigera*), are considered to be native indigenous species. Hilo has a long history of farming during both traditional Hawaiian times and the past two centuries. This particular property is reported to have a history of agricultural and urban uses. Large portions of the property appear to have undergone complete or partial clearing within the last ten years. The site is dominated by common lowland alien plants, almost to the exclusion of native species. All four indigenous species recorded on the site are commonly encountered ruderal species (species that grow in rubbish, poor land, or waste). Typical vegetation in the undeveloped portion of the parcel can be seen in the site photos (Figure 2).

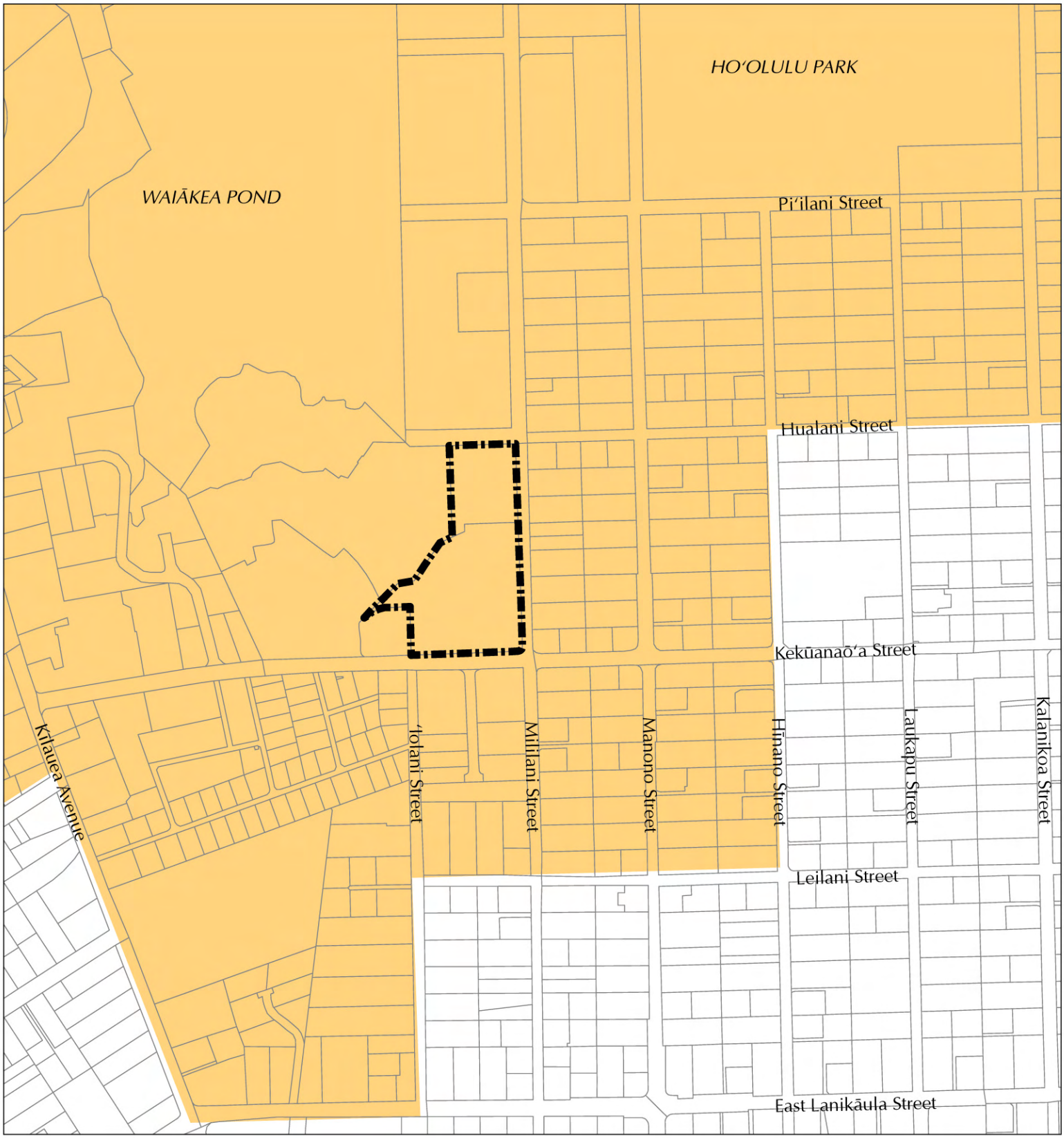


**Legend**

Hilo Family Entertainment Center

Tsunami Evacuation Zone

**FIGURE 11**

Tsunami Evacuation Zone

# Hilo Family Entertainment Center

Hooluana Place, LLC

ISLAND OF HAWAI'I

NORTH

LINEAR SCALE (FEET)

0 250 500 1,000

PBR HAWAII & ASSOCIATES, INC.

Source: Pacific Disaster Center, 1998

Disclaimer: This graphic has been prepared for general planning purposes only.

***Potential Impacts and Mitigation Measures***

Based on the urban setting, the lack of threatened, endangered, and rare species, and the general weediness of the vegetation, it is unlikely that the clearing and redevelopment of the property land will impact any botanical resources. No mitigation measures are planned.

### 3.7.2 Fauna

A faunal survey was conducted by Rana Enterprises in February 2008. The report is reproduced in Appendix D. Below is a synopsis.

*Mammalian Resources*

The two mammalian species (dogs and mongooses) detected during the course of this survey are considered to be alien to the Hawaiian Islands. Hawaiian hoary bats were not recorded during this survey, but they can use resources within the general area on a seasonal basis. This finding is consistent with numerous other surveys conducted in similar habitat in the South Hilo District in recent years. Currently there is no vegetation or habitat present on the site that is suitable for use by this species.

*Avian Resources*

Of the 11 different avian species recorded during this survey all but one are alien to the Hawaiian Islands. The lone native species detected, Pacific Golden-Plover, is an indigenous migratory shorebird species that nests in the High Arctic, returning to Hawai‘i and the Tropical Pacific during the late summer.

Although not detected during this survey, it is possible that small numbers of the endangered endemic Hawaiian Petrel (*Pterodroma sandwichensis* or *‘ua‘u*) and the threatened Newell’s Shearwater (*Puffinus auricularis newelli* or *‘a‘o*) over-fly the area between the months of May and November. There is no suitable nesting habitat within or close to the Hilo Family Entertainment Center site for either of these pelagic seabird species. The primary cause of mortality in both Hawaiian Petrels and Newell’s Shearwaters is thought to be predation by alien mammalian species at the nesting colonies and collision with man-made structures.

It is probable that the endangered Hawaiian Hawk (*Buteo solitarius*) is occasionally present within the general area, although it was not detected during the course of the survey. Currently there is no suitable nesting or perching habitat present within the Hilo Family Entertainment Center site suitable for use by this species.

***Potential Impacts and Mitigation Measures***

Given the lack of suitable habitat for the aforementioned native, threatened or endangered avian species, no impacts are expected, and therefore, no mitigation measures are planned. To prevent possible accidental bird strikes by Hawaiian Petrels and Newell’s Shearwaters, any exterior lighting will be shielded.

(this page intentionally left blank)

# 4.0 ASSESSMENT OF THE EXISTING HUMAN ENVIRONMENT, POTENTIAL IMPACTS AND MITIGATION MEASURES

This section presents background information applicable to the existing human environment. Subject areas addressed include archaeology, transportation, air quality, noise, the socio-economic environment, and visual conditions. Technical studies and analyses have been undertaken to address the potential impacts of the Hilo Family Entertainment Center and to identify appropriate mitigation measures to minimize the identified short- and long-term impacts.

## 4.1 ARCHAEOLOGICAL AND HISTORIC RESOURCES

The following is summarized from the full archeology assessment report, prepared by Alan Haun & Associates, which can be found in Appendix E.

Hawaiian traditional and legendary accounts attest to the longstanding importance of Waiākea. With its large bay, fishponds, wet taro fields, and abundant freshwater, Waiākea was a population center for commoners and royalty. Sandalwood was exported during the first two decades of the 1800s, and whalers began stopping at Hilo in the mid-1820s. In 1824, a missionary station was established in Waiākea and soon after, churches, schools, stores, and a sawmill. By the end of the 1880s, over 5,600 acres were in cane cultivation, along with plantations and mills. At this time a sugar mill was established at the inland end of Waiākea Fishpond. In the 1900s, the population of Hilo grew dramatically with the expansion of sugar cane cultivation, pineapple production, the timber industry, and other commercial developments.

The Hilo Family Entertainment Center site area is situated within the lower portion of the Upland Agricultural Zone, based on a settlement pattern model describing traditional Hawaiian land uses. The model consists of five elevation-defined zones: Coastal Settlement, Upland Agricultural, Lower Forest, Rainforest, and Sub-Alpine or Montane. The Coastal Settlement Zone, extending approximately a half mile inland from the shoreline between sea level and the 50-foot elevation, was the most densely populated with both permanent and temporary habitations, high status chiefly residences, and *heiau*. Settlements were concentrated at Hilo Bay and sheltered bays and coves. The Upland Agricultural Zone was situated between approximately 50 and 1,500 foot elevations. Settlement in the zone consisted of scattered residences among economically beneficial trees and agricultural plots of dryland taro and bananas. Lava tubes were utilized for shelter. A pattern of shifting cultivation is believed to have converted the original forest cover to parkland of grass and scattered groves of trees. Wetland cultivation of taro occurred along streams. Historic site types in the area vicinity likely included plantation agriculture-related features and residences. The Hilo Family Entertainment Center site is situated within the lower portion of this zone.

No surface archaeological sites or features were identified within the Hilo Family Entertainment Center property and no Land Commission Awards are present. The northern portion of the property is comprised of a tennis court, an associated shed, and a maintained grass lawn. The remainder of the property has been mechanically leveled as evidenced by the low secondary

growth vegetation. The low height of the vegetation in this area indicates that the vegetation may have been cleared as recently as two years ago. Shovel tests indicate that this area has been filled, likely during construction of a gravel parking lot. Also recovered were fragments of waterworn coral, shell, concrete and modern glass. These materials were likely imported to this location. Based on the negative survey results no further archaeological work was recommended.

***Potential Impacts and Mitigation Measures***

The State Historic Preservation Division (SHPD) has determined that no historic properties will be affected by the Hilo Family Entertainment Center based on the archeology assessment report, prepared by Alan Haun & Associates (see Appendix A for a copy of the SHPD letter, provided at the time of pre-consultation and Appendix B, for a second SHPD letter which confirms same). In addition, Alan Haun & Associates recommended no further archaeological work.

Hoʻoluana Place LLC will comply with all State and County laws and rules regarding the preservation of archaeological and historic sites. Should archeological or historic remains, such as artifacts, burials, concentrations of shell or charcoal be encountered during construction activities, work will cease in the immediate vicinity of the find and the State Historic Preservation Division will be contacted for appropriate mitigation, if necessary.

## 4.2 CULTURAL RESOURCES

A cultural impact assessment was prepared by the firm of T. S. Dye & Colleagues. The

There are many Hawaiian legends associated with Hilo and its environs. They relate to the gods, the people, and their relationship. Legends reflect the antiquity of occupation in the Hilo area, and the importance of the place as a seat of power. The uplands of Hilo were noted for their wild natural and cultural powers. Moʻo lived there, and harassed the occupants of the lower elevations. The gods and goddesses of Hawaiʻi tamed the natural powers of drought, fire, wind, and the moʻo, and brought order and safety to the people of Hilo.

Hilo is likely one of the first main settlement areas on the island due to its calm and sizable bay, permanent supply of fresh water, and fertile and arable soils. One of the early Polynesian travelers to Hawaiʻi was named Hiro, or Hilo, and the attachment of his namesakes to this place supplies some circumstantial evidence to the early occupation here.

The town of Hilo was a prominent setting in the long campaign of conquest of the islands by Kamehameha, who at one point selected Hilo as his base of operations in preparation for launching an attack on Oʻahu and the western islands. January 1797 saw the last of the battles fought by Kamehameha to unite the islands, but Hilo continued to be a place of power after the death of Kamehameha and after the breaking of the kapu by Kamehameha's son Liholiho.

<u>Historical Developments</u>: Sandalwood, whaling, industrial and commercial concerns, agriculture, milling and sugar plantations were established in the 1800s in this area. Waiākea Mill began production in 1879. The mill took ownership of the land in 1903. The industrial area was expanded in 1932 when a plant opened there to produce wall boards (canec) for buildings using bagasse (a plant byproduct of sugar cane processing). The mill stopped producing sugar in 1947, but bagasse production continued until 1966. A hotel complex was built on the

disassembled plant and mill site, and that eventually became the Waiākea Villas apartment and office complex that exists there today. There are no standing remnants of the mill.

Few archaeological sites have been recorded from the results of projects conducted in the lower elevations of Waiākea. This may be due to the disturbance of 200 years of the growing Hilo town. Burials have been found in the larger area. Since sand dunes are a preferred burial location it should be expected that prehistoric burials exist within some portion of the sandy shoreline of Hilo Bay.

The landscape of the Hilo Family Entertainment Center property today reflects the industrial history and the 87 year operation of the Waiākea Mill Company. Rubble from the mill occurs within a ground surface that has been modified to support warehouses and mill buildings that no longer exist. Any resources from periods prior to the mill likewise no longer exist. There have been no subsequent events or practices that constitute traditional cultural properties or cultural practices. Based on the results of the historical research, no interviews were deemed necessary to investigate potential traditional cultural properties or cultural practices.

***Potential Impacts and Mitigation Measures***
Documents indicate that this part of Waiākea was not used for habitation or agricultural purposes during traditional times, and there are no legendary associations, archaeological sites, or loci of cultural practices for this land. The sugar mill dominates the historical developments at this location. Based on the results of these investigations, there are no traditional cultural properties or cultural practices being conducted on the Hilo Family Entertainment Center property. Consequently, the construction and implementation of the Hilo Family Entertainment Center will have no impact to traditional cultural properties or cultural practices.

## 4.3 NOISE

Typical noise sources in the area include: noise from aircraft approaching or taking off at the Hilo International Airport; traffic along Mililani and, Kekūanaō‘a streets; lawn maintenance equipment; wind through vegetation; birds chirping and dogs barking. The Hilo Family Entertainment Center site is located outside of but between the two western and southwestern approach surfaces of the Hilo International Airport runways. A thorough noise study was completed for the 2003 *Hilo International Airport Improvements Final EA*. Noise contours prepared for that report indicate street-side of the Hilo Family Entertainment Center site experiencing ambient noise levels ranging from 55 to 65 DNL and the interior and Mililani Street-side of the property experiencing background ambient noise levels from 45 to 55 DNL.

***Potential Impacts and Mitigation Measures***

***Construction Phase Impacts and Mitigation Measures:*** Development of the Hilo Family Entertainment Center will involve grading and other temporary noise-generating construction. Noises from these activities are likely unavoidable due to their intensity but will be limited to daylight hours. Noise levels will vary over the construction period, with levels being a function of the machinery and methods employed at any given time.

Due to Hilo’s open and outdoor living conditions, the predominant use of naturally ventilated dwellings, and relatively low outdoor to indoor sound attenuation afforded by such structures,

adverse construction-related noise impacts with exterior noise level of 65 DNL or greater may not be entirely eliminated, but will be of a temporary duration.

All construction activities will comply with the HAR, Chapter 46, Community Noise Control. Contractors will also adhere to the guidelines for the hours of operation of heavy equipment and noise curfew times set forth in the State Department of Health (DOH) noise control regulations.

***Operational Phase Impacts and Mitigation Measures:*** The Hilo Family Entertainment Center is not expected to cause significant adverse impacts to noise levels in the area. Once the facility is in operation, noise from the site that might be experienced by the closest residences would be noise from: traffic associated with the facility, the parking lot and occasional conversation. The Hilo Family Entertainment Center involves indoor recreation, so nearly all of the noise generated by recreational activities will be contained within the buildings. Noise levels from the proposed buildings' mechanical equipment (such as air conditioning) will be similar to the noise generated by other buildings in the area.

Noise generated from the Hilo Family Entertainment Center will be in compliance with DOH permissible noise standards. DOH Administrative Rules, Chapter 46, Community Noise Control, defines the maximum permissible sound levels, and provides for the prevention, control, and abatement of noise pollution in the State from commercial activities. It establishes noise quality standards to protect public health and welfare, and to prevent the significant degradation of the environment and quality of life.

## 4.4 AIR QUALITY

Kīlauea Volcano has been emitting volcanic gases at its Pu'u 'Ō'ō vent, about 25 miles southwest of the Hilo Family Entertainment Center site, on a continuing but intermittent basis since 1983. A combination of these emissions and the local atmosphere produce volcanic fog, or "vog." Impacts to ambient air quality from vog are monitored at Hilo Airport. In spite of this, air quality for the island is generally good. There are no non-attainment areas (locality where air pollution levels persistently exceed National Ambient Air Quality Standards) for the State as a whole.

***Potential Impacts and Mitigation Measures***

Impacts associated with the Hilo Family Entertainment Center would be limited to construction activities from fugitive dust emissions (although soils are classified as "rocky muck" with erosion hazard described as "slight") and construction equipment exhaust emissions. During the construction phase, the contractor will adhere to best management practices as required by Department of Health. Therefore, the Hilo Family Entertainment Center is not expected to have any negative impacts. During construction the following mitigation measures will be employed, as applicable:

***Short-term Mitigation:***

- Frequent watering during construction activities to maintain dust control in active work areas at least twice daily on days without rainfall
- Grassing as soon as practicable, once grading has been completed.

- Wind screening as appropriate to limit fugitive dust
- Application of mulch and soil stabilizers on graded areas
- Covering trucks traveling on roadways and on-site washing to keep dirt from traveled roadways
- Monitoring dust at the project boundary during the construction period

***Long-term Mitigation:***

- Establishing extensive landscaping to maintain good air quality and integrate the Hilo Family Entertainment Center with the surrounding area

All construction activities will comply with State of Hawai'i Air Pollution Control regulations and the provisions of HAR Section 11-60.1-33 on Fugitive Dust. A combination of mitigation measures will be implemented to minimize air quality impacts. During construction, these measures can be adjusted to reflect current site conditions. The construction plan will also identify mitigation measures to minimize the potential impact on air quality. After construction, no serious long-term impacts on air quality are expected.

## 4.5 MAN-MADE HAZARDS

The site is currently vacant and un-maintained, but was once occupied by the Flintkote Company, which manufactured canec, a wallboard made from the fibers of cane after the sugar had been extracted. To prevent termite infestation the canec was treated with arsenic.

A Phase I Environmental Site Assessment (ESA) was conducted in May 2007 by Hawaii Environmental for the site. The study included a site investigation and a search of historical records and inquiries into current regulatory actions for the property (TMK: (3) 2-2-30: 17 & 19y) and surrounding properties. The ESA made several conclusions as follow:

- There is a known recognized environmental concern on the property: arsenic levels exceed the United States Environmental Protection Agency (EPA) non-carcinogenic preliminary remediation goals for direct contact exposure pathway in residential soil (22mg/kg).
- There are no environmental liens or other activity and use limitations found on the property.
- There are known arsenic levels in the soil of parcel 17 (TMK (3)-2-2-30:17), but it is unknown if any hazardous substances were used or stored on parcel 17, or if the contaminants were migratory.
- The property is not listed on environmental databases. Nearby sites were reviewed for environmental concerns relative to the property. The surrounding properties around the Waiakea Fish Ponds are listed in the federal Comprehensive Environmental Response, Compensation, and Liability Information System (CERCLIS) database.
- Parcel 17 is currently unoccupied with no surface water, and no information was found on ground water contamination on parcel 17.
- Parcel 19 is occupied with a small commercial building and a two court tennis court. There were no surface waters, and no information was found on contaminated ground water for parcel 19.

- The adjoining properties in their current state are unlikely to cause any significant environmental concerns.

Subsequent to the ESA, additional soil sampling was performed by a consultant for a potential purchaser of the site. Preliminary test results were provided to the State of Hawai‘i Department of Health, Hazard Evaluation and Emergency Response Office (HEER Office). These results indicated levels of bioaccessable arsenic between 0.3 parts per million (ppm) and 234 ppm.

***Potential Impacts and Mitigation Measures***

The HEER Office has developed a guidance document, “Soil Action Levels and Categories for Bioaccessible Arsenic Technical Report”, dated August 7, 2006, to help determine the magnitude of potential health risks at sites where arsenic-contaminated soil is discovered and help guide the scope of remedial actions needed. Depending on the bioaccessible arsenic levels, and the proposed use of the site (commercial vs. residential), the DOH’s *Technical Guidance Manual for the Hawai‘i State Contingency Plan* (1997), describes potential remedial actions including: restricting use of soils as fill material off-site; ensuring lawns and landscaping are maintained to minimize exposure; isolating the soils on site under permanent structures or properly designed caps; or, removing the soils from the site.

For the Hilo Family Entertainment Center site, the ESA did not report any environmental liens or other activity or use limitations. However, Ho‘oluana Place LLC acknowledges that there are known arsenic levels that exceed EPA non-carcinogenic preliminary remediation goals and that development of the site will require some level of remedial action. To date, the HEER Office has been preliminarily involved with soil investigations and Ho‘oluana Place LLC anticipates additional interaction with the HEER Office as permitting for the Hilo Family Entertainment Center moves forward. At this time, recommendations from HEER Office staff include the following:

- Additional testing to establish the vertical delineation for arsenic contamination.
- A possible need to sample groundwater beneath the site.
- Utilizing the HEER Office, “Soil Action Levels and Categories for Bioaccessible Arsenic Technical Report”, dated August 7, 2006, which provides guidance on the assessment of arsenic-contaminated soils in Hawai‘i to guide the scope of remedial actions needed.
- HEER Office consultation with EPA in developing remedial actions needed, due to the site’s relative proximity to CERCLIS sites surrounding Waiakea Pond.
- Participation in a public process as described in the 1997 Department of Health Technical Guidance Manual.

As permitting for Hilo Family Entertainment Center moves forward, Ho‘oluana Place LLC will coordinate with the HEER Office to further characterize the extent of the contamination, formulate a plan for remedial action, and participate in a public process lead by the DOH to ensure that sufficient information regarding the remedial actions is provided to the general public. The HEER office has reviewed the Draft Environmental Assessment and concurs with the recommendations prescribed in it.

Upon completion of the remedial action, Ho‘oluana Place LLC anticipates that the risks to public health or welfare, the environment or natural resources will be reduced from its present state and potentially eliminated all together.

## 4.6 VISUAL RESOURCES AND OPEN SPACE

The Hilo Family Entertainment Center will change the visual aspect of the property from vacant to the Hilo Family Entertainment Center. See photos in Figure 2. However, the appearance of the Hilo Family Entertainment Center will be in keeping with the adjacent urban uses.

***Potential Impacts and Mitigation Measures***

Although the visual aspect will change from vacant to the Hilo Family Entertainment Center, this change is will be in consonance with the surrounding urban areas.

## 4.7 POPULATION & SOCIAL BENEFITS

From 1980 to 2000 Hawai‘i County’s population (148,677 in 2000) grew 61.5%. The South Hilo District (47,386 population in 2000) increased 12.1%, more slowly that the island’s other 8 districts. Neighbor island growth rates will continue to outpace that of the State as a whole.

***Potential Impacts and Mitigation Measures***

The Hilo Family Entertainment Center will not affect the County’s or the district’s population growth rate or its characteristic makeup, nor will it lead to any population shifts. The development of the indoor recreational/commercial complex will serve the needs of the growing population of Hawai‘i County. There are no expected adverse impacts on population characteristics from the Hilo Family Entertainment Center, and therefore no mitigation measures are proposed.

## 4.8 ECONOMIC CHARACTERISTICS

The economy of East Hawai‘i is changing from sugar cultivation, an economic mainstay for many years but no longer in existence, to diversified agriculture, the visitor industry and research (astronomy, agriculture). Hilo, as the County seat, is the center of educational, governmental, industrial, commercial, and distribution activities. Hilo Harbor is one of the island’s two deep draft harbors. The visitor industry is an important factor in the County’s economy, but only 13% of visitors stay in East Hawai‘i. Per capita income is below that of other counties, and the unemployment rate is above the State average.

***Potential Impacts and Mitigation Measures***

Over the long term, the Hilo Family Entertainment Center will have a beneficial impact on the resident population by providing various business and employment opportunities. There will likely be no impact on the visitor industry other than possibly in a secondary or supportive role. No adverse impacts are expected and no mitigation measures are proposed.

## 4.9 INFRASTRUCTURE

Witcher Engineering LLP prepared a preliminary engineering report for the Hilo Family Entertainment Center. Appendix C contains the complete report. Key points and estimated demands are presented below.

### 4.9.1 Utilities

***Electrical and communications lines*:** Two overhead distribution pole lines exist, one along the Kekūanaō‘a Street and one along Mililani Street. Hawaiian Electric Light Company (HELCO) has an overhead distribution line within the Kekūanaō‘a Street right-of-way along the southern boundary of the Hilo Family Entertainment Center site and an overhead distribution line within the Mililani Street right-of-way along the eastern boundary. There is three-phase power available to the site.

HELCO’s current system peak load is 269,850 kilowatts. The reserve margin is 33 percent. The area is currently by the existing 7.5 MVA Kanoelehua electrical switching station and a 13,800 volt overheard distribution system along Kekuanaoa Avenue.

Hawaiian Telcom provides telephone and communications service to the site. Oceanic Time Warner provides cable television and communications service to the site

***Potential Impacts and Mitigation Measures***

In comments on the Draft EA, HELCO confirmed that it will be able to provide electrical service to the Hilo Family Entertainment Center subject to detailed analysis to be preformed after receipt of detailed design drawings and estimated demand. Ho‘oluana Place LLC and its design consultants will coordinate with HELCO to ensure timely electrical facility installation.

Ho‘oluana Place LLC and its design consultants will also coordinate with Hawaiian Telcom and Oceanic Time Warner to ensure that the Hilo Family Entertainment Center will have adequate telephone and TV service.

### 4.9.2 Water Supply and Distribution

In their pre-consultation letter, the Hawai‘i County Department of Water Supply (DWS) provided information that it maintains six-inch water lines in both Kekūanaō‘a and Mililani Streets.

***Potential Impacts and Mitigation Measures***

In a preliminary engineering report, Witcher Engineering LLP estimated total water demand from the Hilo Family Entertainment Center be 0.014 mgd at full-build out. In comments on the Draft EA (Appendix B) DWS stated that they reviewed the calculations and found them acceptable. DWS also stated that based on the calculations provided, the Hilo Family Entertainment Center will require 35 units of water, at 400 gallons per day, per unit, and the Department can confirm that water can be made available for that demand.

The DWS comment letter also indicated that the previously issued pre-consultation letter remained effective. In their pre-consultation letter DWS stated that the Hilo Family Entertainment Center will require that there be 2,000 gallons per minute available at the site for fire protection and the existing six-inch waterlines within Kekūanaō‘a and Mililani Streets should be adequate to provide the required fire flow.

DWS further stated that: "…any meter(s) serving the proposed project will require the installation of a reduced principal type backflow prevention assembly within five feet of the meter on private property." Ho‘oluana Place LLC acknowledges that the installation of the backflow prevention assembly(s) must be inspected and approved by DWS prior to commencement of water service.

Ho‘oluana Place LLC acknowledges that plans prepared by a professional engineer showing size and location of the water service connections and improvements required for fire protection are to be submitted before final approval.

### 4.9.3 Wastewater Collection and Transmission

According to the Hilo Family Entertainment Center engineering report, there is an eight-inch sewer line running south in Mililani Street. Both of the project parcels TMK parcels (TMK: (3) 2-2-30: 17 & TMK: (3) 2-2-30: 19) have six inch sewer laterals. During the pre-consultation period, the Hawai‘i County Department of Environmental Management (DEM) confirmed that there is a sewer lateral in Mililani Street.

***Potential Impacts and Mitigation Measures***

During the pre-consultation process, the Department of Environmental Management wrote "The Wastewater Division is granting the above-mentioned project tentative approval for connection to the sewer lateral located on Mililani Street. Final approval will be contingent on the receipt and approval of plans and details for the project, as well as, sewer studies and calculations as per the City and County of Honolulu-Design Standards, Volume 1." Tentative approval and final approval requirements were reiterated in a letter received during the Draft EA public comment period (See DEM letters in Appendix A and B). As Hilo Family Entertainment Center plans progress, Ho‘oluana Place LLC will provide plans and details (including sewer studies and calculations) to the Department of Environmental Management for review and approval.

Witcher Engineering LLP calculates the sewage flow from the property to be approximately 20,000 gallons per day. Appendix C contains the sewer calculations.

### 4.9.4 Drainage Facilities

Flood hazards are primarily identified by the Flood Insurance Rate Map (FIRM) prepared by the Federal Emergency Management Agency (FEMA). The Hilo Family Entertainment Center site is outside all FEMA flood designations and is listed on the FIRM map as "Zone X" or minimal flooding area (from Wailoa Stream).

While the Hilo Family Entertainment Center site is also located near Palai Stream there is a ridge that separates the site from this stream.

Due to the existing topography, ponding does occur on the site during heavy rainfall. From visual observation it appears that this ponding could be attributed to runoff originating off site, particularly from both Kekūanaō‘a and Mililani Streets. These streets do not have curbs and gutters and apparent drainage structures. In particular, the portion of the property along Mililani Street appears to have grass-lined swale that would be conducive to collecting storm water runoff.

Based on County drainage standards, existing total flow (10-year storm) from the Hilo Family Entertainment Center site is calculated to be 10.92 cubic feet per second (cfs).

***Potential Impacts and Mitigation Measures***

Impermeable surfaces established by on-site roadways, parking areas, and buildings within the Hilo Family Entertainment Center site will increase the amount of storm runoff currently generated.

The post development runoff from the Hilo Family Entertainment Center site is estimated to be 62.40 cfs, an increase of 51.48 cfs over calculated existing conditions. However, all additional runoff will be retained on site with no flow off the site. Drywells or other drainage facilities will be installed at the site according to applicable standards of the County and the State. Based on runoff calculations, the civil engineer calculates that 11 drywells are required. Appendix C contains the drainage plan.

To further mitigate potential water quality impacts, pursuant to HAR 11-55 (Water Pollution Control), a National Pollutant Discharge Elimination System (NPDES) permit will be obtained prior to construction to address point source discharges during construction. Ho‘oluana Place LLC is also considering additional stormwater quality management methods such as conveying stormwater to drywells via landscape strips or by installing oil water separators for the drywells located within parking areas. As the design of the Hilo Family Entertainment Center progresses, decisions relative to water quality treatment methods will be made considering several factors including: effectiveness, cost, and integration with a soil remediation plan.

## 4.10 TRANSPORTATION FACILITIES AND TRAFFIC

Witcher Engineering LLP conducted a traffic impact analysis report (TIAR) for the Hilo Family Entertainment Center. Appendix G contains the complete TIAR.

Traffic counts were taken at the intersections of Kekūanaō‘a Street and Mililani Street and Pi‘ilani Street and Manaono Street. Traffic counts were also taken at the intersection of Kekūanaō‘a Street and Monono Street, a block from the site. The counts taken at Kekūanaō‘a Street were to gain a better understanding of north south traffic transiting the area as Manono Street carries a heavier volume of traffic than Mililani Street. Peak hours of traffic flow were observed as follows:

| Intersection | AM and PM Peak Hour of Traffic | Vehicles Per Hour |
|---|---|---|
| Kekūanaō‘a & Manono | 7:15-8:15 AM | 1648 |
| Kekūanaō‘a & Manono | 4:00-5:00 PM | 2061 |
| Kekūanaō‘a & Mililani | 7:30-8:30 AM | 1110 |
| Kekūanaō‘a & Mililani | 3:00-4:00 PM | 1340 |
| Pi‘ilani & Manono | 8:00-9:00 AM | 876 |
| Pi‘ilani & Manono | 4:00-5:00 PM | 1161 |

Kekūanaō‘a Street is paved and includes a striped shoulder. No sidewalks or bike lanes exist along the site's Kekūanaō‘a frontage. Mililani Street is also paved, however, there is no shoulder, nor are there bike lanes or sidewalk. There are existing crosswalks at the intersection of Kekūanaō‘a Street and Manono Street.

***Potential Impacts and Mitigation Measures***

The TIAR projects future traffic volume based on the sum of existing levels of traffic plus traffic projected to be generated from the Hilo Family Entertainment Center. Future intersection Level of Service (LOS[1]) projections, after project buildout, vary from "A" to "F" for the Kekūanaō‘a and Mililani Streets intersection, to "F" for all directions at Kekūanaō‘a and Manono. The TIAR includes tables that detail the level of service for each intersection during the AM and PM peak hours for existing and future traffic. The TIAR does not include "growth" traffic or estimates of traffic based on other approved projects in the area.

In their comments on the Draft EA (see Appendix B) the County of Hawai‘i Police Department expressed a concern with increased traffic on Kekūanaō‘a and Mililani Streets as well as the intersections of Hualani and Piilani Streets. The Police Department suggests that a traffic signal or other traffic mitigation measure be considered for the Kekūanaō‘a Street and Mililani Street intersection. Ho‘oluana Place LLC's traffic engineer reviewed the Police Department's suggestion and does not recommend a signal for the Kekūanaō‘a Street and Mililani Street intersection due to the proximity of the existing signal one block away at the intersection of Kekūanaō‘a Street and Manono Streets. During peak traffic hours traffic backs up from the Kekūanaō‘a/Manono intersection through the Kekūanaō‘a/Mililani intersection. It is the opinion of the traffic engineer that installing a signal at Kekūanaō‘a/Mililani would only exacerbate the congestion.

To mitigate traffic impacts, the TIAR recommends the construction of a left turn lane eastbound at the Kekūanaō‘a/Mililani Street intersection (traffic eastbound on Kekūanaō‘a turning left to

[1] Operations of the study intersections were evaluated using Level of Service (LOS) calculations. LOS is a qualitative description of the performance of an intersection based on the average delay per vehicle. Intersection levels of service range from LOS A, which indicates free flow or excellent conditions with short delays, to LOS F, which indicates congested or overloaded conditions with extremely long delays. LOS for signalized intersections was calculated using the Highway Capacity Manual 2000 (HCM 2000) methodology. The LOS is based on the average delay (in seconds per vehicle) for the various movements within the intersection. A combined weighted average delay and LOS are presented for each of the signalized intersections.

northbound Mililani). Additionally, a second left turn lane is recommended for the southbound left turn lane at Kekūanaō‘a and Mililiani Street (traffic southbound on Mililani turning left to eastbound Kekūanaō‘a). If there is adequate right of way, right turn lanes at the Kekūanaō‘a and Manono Street intersection may provide mitigation by making more right turns on red lights possible.

The TIAR also recommends that if a driveway is proposed on Kekūanaō‘a, that the traffic be limited to right turns in and right turns out only. Based on the TIAR recommendations and concerns the main vehicular entries and exits to the Hilo Family Entertainment Center will be located on Mililani Street.

Pedestrian and Bicycle infrastructure in the area is proposed to be improved by the Manono Street Bike and Pedestrian Improvements Project, design of which is on the County's Capitol Improvement Program schedule for fiscal year 2008-2009. The project will provide a bicycle lane, sidewalks and improved drainage facilities on Manono Street from Bayfront Highway to Kawili Street.

With improved pedestrian and bicycle facilities anticipated by the County on Manono Street, it is expected that at least some bicycle and pedestrian traffic will be generated by Hilo Family Entertainment Center. Ho‘oluana Place LLC proposes to provide sidewalks in compliance with County Public Works Standards along the site street frontages on Kekūanaō‘a and Millilani Streets. While there is not adequate right of way to provide bicycle lanes on the streets, Ho‘oluana Place LLC proposes to provide bicycle racks that permit secure locking in a well-lit location, to accommodate bicycles on site.

## 4.11 SOLID WASTE DISPOSAL FACILITIES

***Construction Phase:*** As with all projects, solid waste will be generated by construction activities. All disposal will follow State and County regulations.

***Operational Phase:*** The County does not provide solid waste collection services. The development will use private contractors.

***Potential Impacts and Mitigation Measures***

***Construction Phase:*** Any waste generated by construction activities will be disposed of according to State and County regulations.

In addition, to the greatest extent practicable, Ho‘oluana Place LLC will instruct the contractor to:

- Develop a job-site recycling plan for construction and recycle as much construction and demolition waste as possible
- Specify and use products with recycled content such as: steel, concrete aggregate fill, drywall, carpet and glass tile

***Operational Phase:*** Hoʻoluana Place LLC will be encouraged to incorporate provisions for recycling into the Hilo Family Entertainment Center, utilizing a collection system and space for bins for recyclables.

## 4.12 EMERGENCY SERVICES

Police: The County police headquarters are located 1.4 miles away from the Hilo Family Entertainment Center site on Kapiʻolani Street in Hilo.

Fire: The nearest fire station is located on Keaʻā Street north of the site, just off of Kalanianaʻole Street. A 24-hour substation is also located 1.5 miles away on Kinoʻole Street in Hilo.

Medical Care: Hilo Medical Center is the closest facility, located 3.6 miles from the site on Waiānuenue Avenue in Hilo.

***Potential Impacts and Mitigation Measures***

There will be an occasional and unavoidable demand for emergency services; however, no significant impacts to the above public services are anticipated as a result of the Hilo Family Entertainment Center.

The Hilo Family Entertainment Center will be designed and built in compliance with County fire code requirements (UFC Section 10). In their comments on the Draft EA the County of Hawaiʻi Fire Department stated that fire apparatus access roads must be provided and maintained in accordance with the Uniform Fire Code Section 10.207 and that water supply must be in accordance with Uniform Fire Code Section 10.301(c).

Hilo Family Entertainment Center businesses and employees will comply with Occupational Safety and Health Administration (OSHA) regulations.

## 4.13 RECREATIONAL FACILITIES

There are a number of recreational facilities, parks, and open spaces in the Hilo area including: Kūhiō Kalanianaʻole Park, Honoliʻi Beach Park, Liliʻuokalani Gardens, Reeds Bay, Onekahakaha Beach Park, Kealoha Beach Park, Carlsmith Beach Park, and Richardson Ocean Park.

***Potential Impacts and Mitigation Measures***

No significant impacts to recreational facilities are anticipated as a result of the Hilo Family Entertainment Center due to the relative distance from the site to these facilities. Further, the project is not a direct generator of new residents requiring recreational facilities. The Hilo Family Entertainment Center will provide indoor recreational opportunities on a commercial (user fee) basis.

(this page intentionally left blank)

# 5.0 RELATIONSHIP TO PLANS AND POLICIES

## 5.1 STATE OF HAWAI'I

### 5.1.1 Chapter 343, Hawai'i Revised Statues

This EA is prepared pursuant to Chapter 343, Hawai'i Revised Statutes (HRS).

The Hilo Family Entertainment Center will include infrastructure improvements that will utilize County road rights-of-ways. The use of County lands triggers an environmental requirement for the preparation of an EA in compliance with Chapter 343, HRS. The site is also within the Special Management Area (SMA). As such development will require a SMA Use permit in compliance with Chapter 205A, HRS.

### 5.1.2 State Land Use Law, Chapter 205, Hawai'i Revised Statues

The subject property lies within the State Land Use Urban District (Figure 7). The Urban District generally includes lands characterized by "city-like" concentrations of people, structures and services. This district also includes vacant areas for future development. Jurisdiction of this district lies primarily with the respective counties. Generally, uses permitted in the Urban District are established by the respective County through ordinances or rules. The proposed use of the property is in keeping with State Urban District designation and the County planning and zoning designations for the site.

### 5.1.3 Coastal Zone Management Act, Chapter 205A, Hawai'i Revised Statutes

The objectives of the Coastal Zone Management (CZM) Program, (Section 205A-2, HRS), are to provide the public with recreational opportunities, protect historic and prehistoric resources, protect scenic and open space resources, protect coastal ecosystems, provide facilities for economic development, reduce hazards, and manage development. The County of Hawai'i has confirmed that the site is within the Special Management Area (Figure 8) and is therefore subject to Coastal Zone Management objectives and guidelines as part of the Special Management Area Use Permit process. A SMA permit processed by the County of Hawai'i will be required for Hilo Family Entertainment Center. The Coastal Zone Management program objectives applicable to the Hilo Family Entertainment Center are discussed below.

**RECREATIONAL RESOURCES**

**Objective**
*Provide coastal recreational opportunities accessible to the public.*

**Comments:**
The Hilo Family Entertainment Center is on property designated Urban by the State Land Use Commission and zoned Resort and General Commercial by the County. The property is part of a former sugar mill site, long vacant. As such, the Hilo Family Entertainment Center will not have any effect on coastal recreational areas or uses or effect access to coastal recreational areas in the County.

## HISTORIC RESOURCES

**Objective**
*Protect, preserve, and, where desirable, restore those natural and manmade historic and prehistoric resources in the coastal zone management area that are significant in Hawaiian and American history and culture.*

**Comments**
The Hilo Family Entertainment Center site does not have any natural or man-made historic or prehistoric resources significant in Hawaiian and American history and culture. The State Historic Preservation Division (SHPD) has determined that no historic properties will be affected by the project based on the archeology assessment report, prepared by Alan Haun & Associates (see Appendix A for a copy of the SHPD letter).

## SCENIC AND OPEN SPACE RESOURCES

**Objective**
*Protect, preserve, and, where desirable, restore or improve the quality of coastal scenic and open space resources.*

**Comments**
The area does not provide a high quality coastal scenic or open space resource. The neighboring Waiākea Villas apartment and office complex blocks any views towards Waiākea pond. The development does not involve shoreline open space or scenic resources, and will be sited on a former sugar mill site, now zoned for resort and general commercial use.

## ECONOMIC USES

**Objective**
*Provide public or private facilities and improvements important to the State's economy in suitable locations.*

**Comments**
The Hilo Family Entertainment is in an area zoned for resort and general commercial uses. It is located within an area surrounded by other urban uses, which prevents degradation of more environmentally sensitive areas such as along the coastline. Similarly, the location away from the shoreline will not impede future development of water dependent or water related uses.

## COASTAL HAZARDS

**Objective**
*Reduce hazard to life and property from tsunami, storm waves, stream flooding, erosion, subsidence, and pollution.*

**Comments**
The Hilo Family Entertainment Center site is located well inland from areas identified by the Federal Emergency Management Agency (FEMA) as subject to flooding from Wailoa Stream,

but is within the tsunami evacuation zone. To reduce hazard to life and property from this threat, County and State civil defense requirements will be adhered to regarding evacuation procedures, and the building specifications will conform to the Uniform Building Code. In addition, the Waiākea High School Gym, located at 155 W. Kāwili Street, approximately 1.5 miles west of the site, is a designated emergency evacuation center for the area. There is minimal or no risk from storm waves, stream flooding, erosion or subsidence. To prevent water pollution and sedimentation from site runoff, County and DOH regulations will be adhered to during the construction and operational phases.

**BEACH PROTECTION**

**Objective**
*Protect beaches for public use and recreation; locate new structures inland from the shoreline setback to conserve open space, minimize interference with natural shoreline processes, and minimize loss of improvements due to erosion.*

**Comments**
The Hilo Family Entertainment Center site is located well inland from the shoreline setback area. As such it will not interfere with natural shoreline processes. Further, to protect nearby Wailoa Stream, the contractor will utilize best management practices to control site erosion in compliance with the required National Pollution Discharge Elimination System (NPDES) permit.

**MARINE RESOURCES**

**Objective**
*Promote the protection, use and development of marine and coastal resources to assure their sustainability.*

**Comments**
To mitigate potential water quality impacts, a National Pollutant Discharge Elimination System (NPDES) permit will be obtained prior to construction to address point source discharges during construction. Hoʻoluana Place LLC is also considering additional stormwater quality management methods such as the use of oil water separators for the drywells located within parking areas.

Concerns regarding the potential for groundwater contamination from arsenic-contaminated soils on site will also be addressed through a process outlined by the DOH HEER Office.

## 5.2 COUNTY OF HAWAIʻI

### 5.2.1 General Plan

The General Plan was adopted in February 2005 and is a policy document for the long-range comprehensive development of the island of Hawaiʻi. The plan provides direction for the future growth of the County and offers policy statements that embody the expressed goals for present and future generations. The General Plan provides the legal basis for all subdivision, zoning, and

related ordinances and for the initiation and authorization of all public improvements and projects.

According to the General Plan LUPAG (Land Use Pattern Allocation Guide), the Hilo Family Entertainment Center site is designated High Density Urban (Figure 5). During the pre-consultation process, the County Planning Department wrote: "The proposed development will include a sports bar, 16,000 square feet of retail space, restaurant and family entertainment center. These uses all appear to be permitted uses in the County's Resort-Hotel (V-.75) zoning district and the State Land Use Urban district." Goals, objectives, and policies from the General Plan relevant to the proposed development are discussed below.

**ECONOMIC**

**Goals**

(a) *Provide residents with opportunities to improve their quality of life through economic development that enhances the County's natural and social environments.*

**Comments:** The Hilo Family Entertainment Center will provide employment in Hilo for a commercial use that will provide recreational opportunities for both the resident and visitor communities.

(b) *Economic development and improvement shall be in balance with the physical, social, and cultural environments of the island of Hawai'i.*

**Comments:** The Hilo Family Entertainment Center property is in the County Resort and General Commercial zoning districts and in the State Urban district. The activities proposed as part of the Hilo Family Entertainment Center are in keeping with these designations without compromising the County's physical, social or cultural environment.

(c) *Strive for diversity and stability in the economic system*
(d) *Provide an economic environment that allows new, expanded, or improved economic opportunities that are compatible with the County's cultural, natural and social environment*

**Comments:** The proposed development is in conformance with the current underlying zoning and the surrounding land uses and environment. The Hilo Family Entertainment Center will provide for year-round employment for a use that will serve both the visitor and resident population.

(e) *Strive for an economic climate that provides its residents an opportunity for choice of occupation*
(f) *Strive for diversification of the economy by strengthening existing industries and attracting new endeavors*
(g) *Strive for full employment*

**Comments:** The new indoor recreational development provides a venue for increased occupational options (as an alternative to jobs in the visitor industry in West Hawai'i).

## ENERGY

### Goals & Policies

(a) *Strive towards energy self-sufficiency;*
(g) *Provide incentives that will encourage the use of new energy sources and promote energy conservation.*
(n) *Encourage energy-saving design in the construction of buildings.*

**Comments:** Wherever possible, to the design, construction and operation of the Hilo Family Entertainment Center follow Sustainable Building Guidelines to reduce energy consumption. The Hilo location will generate new employment opportunities for workers that might otherwise commute by car to West Hawai‘i.

(m) *Encourage the use of solar water heating through the continuation of State tax credit programs, through the Building Code, and in County construction*
(n) *Encourage energy-saving design in the construction of buildings*

**Comments:** Wherever possible, buildings and facilities will be designed following Sustainable Building Guidelines to reduce energy consumption, and take advantage of natural energy sources in building design.

## ENVIRONMENTAL QUALITY

### Goals

(a) *Define the most desirable use of land within the County that achieves an ecological balance providing residents and visitors the quality of life and an environment in which the natural resources of the island are viable and sustainable.*
(b) *Maintain and, if feasible, improve the existing environmental quality of the island.*
(c) *Control pollution.*

**Comments:** The Hilo Family Entertainment Center is in a location that has been used and will continue to be used for commercial and other urban purposes, thus preventing environmental degradation in other areas outside its boundaries. Tenants will be encouraged to use recycled-content building materials where feasible. All County, State and Federal environmental regulations will be adhered to so as to comply with the County’s Environmental Quality Goals. To specifically address the concern over arsenic contamination in the soil, Ho‘oluana Place LLC will participate in a DOH process to develop a remediation plan so as to reduce exposure risk to the State’s satisfaction.

## FLOODING AND OTHER NATURAL HAZARDS

### Goals

(a) *Protect human life*
(b) *Prevent damage to man-made improvements*
(d) *Prevent damage from inundation*
(e) *Reduce surface water and sediment runoff*

(f) *Maximize soil and water conservation*

**Comments:** The Hilo Family Entertainment Center will be designed to minimize harm to human life and damage to physical improvements downstream of the property, through adherence to adopted County Building Codes. All land preparation and construction activities will strictly abide by governmental regulations to minimize soil erosion and runoff. Best management practices in compliance with NPDES requirements will be implemented to limit sediment runoff and maximize soil conservation and water quality.

**Policies**

(b) *Review land use policy as it relates to flood plain, high surf, and tsunami hazard areas*

**Comments:** The Flood Insurance Rate Map for the area shows that the Hilo Family Entertainment Center site is located outside floodplains and is not subject to high surf or tsunami hazard. It is acknowledged that the site is located within the Tsunami Evacuation Hazard zone. A preliminary topographic survey has been conducted for the site indicates that the site is 11 feet above sea level at its lowest elevation, and rises to approximately 27 feet in elevation at the southwest corner of the property nearest the HT & T Credit Union on Kekuanaoa Street.

(g) *Development-generated runoff shall be disposed of in a manner acceptable to the Department of Public Works and in compliance with all State and Federal laws.*

**Comments:** The Hilo Family Entertainment Center will be designed so that development-generated runoff will not increase over existing runoff from the site and damage any "downstream" properties.

*Consider natural hazards in all land use planning and permitting.*

**Comments:** *The County has mapped areas most likely subject to natural hazards. Where areas are deemed appropriate for development, land is zoned as such. Where additional precautions or considerations are required to mitigate for the threat of potential natural hazards, additional requirements are imposed. The project site is located outside the Floodplain, but within the tsunami evacuation area. As such, applicable standards for construction and operations will be adhered to.*

## NATURAL RESOURCES

**Goals:**

(a) *Provide opportunities for recreational, economic, and educational needs without despoiling or endangering natural resources.*

**Comments:** The Hilo Family Entertainment Center will provide a recreational opportunity that does not rely on exploiting Hawai'i's natural and scenic resources.

**PUBLIC UTILITIES - Water Policies:**

(b) *All water systems shall be designed and built to Department of Water Supply standards*

(n) *Develop and adopt a water master plan that will consider water yield, present and future demand, alternative sources of water, guidelines and policies for the issuing of water commitments*

**Comments:** Hilo Family Entertainment Center water systems and transmission lines will be built according to the Department of Water Supply standards. If possible, the use of reclaimed water will be utilized in the complex.

**PUBLIC UTILITIES - Sewer Policies:**

(f) *Require major developments to connect to existing sewer treatment facilities or build their own.*

**Comments:** The development will connect to the municipal sewer system.

**RECREATION**

Goals

**(a)** *Provide a wide variety of recreational opportunities for the residents and visitors of the County.*
**(b)** *Maintain the natural beauty of recreation areas.*
**(c)** *Provide a diversity of environments for active and passive pursuits.*

**Comments:** The Hilo Family Entertainment Center is intended to provide a variety family entertainment not currently available in Hilo. The indoor facility, located in central Hilo will offer this recreational alternative without exploiting natural resources.

**LAND USE**

**Goals**

(a) *Designate and allocate land uses in appropriate proportions and mix and in keeping with the social, cultural, and physical environments of the County*

**Policies**

(a) *Zone urban- types of uses in areas with ease of access to community services and employment centers and with adequate public utilities and facilities*

(b) *Promote and encourage the rehabilitation and use of urban areas that are serviced by basic community facilities and utilities*

(c) *Allocate appropriate requested zoning in accordance with the existing or projected needs of neighborhood, community, region and County*

**Comments:** The Hilo Family Entertainment Center is in an area zoned for resort and general commercial uses. It is located within an area surrounded by other urban uses, which will prevent degradation of more environmentally sensitive areas outside the zone. The Hilo Family

Entertainment Center will rehabilitate and make use of the property consistent with County zoning and will connect to municipal utility systems. The Hilo Family Entertainment Center site will be convenient and accessible to and from other centers of activity in the Hilo central business district, and within convenient walking and bicycling distance of residential and commercial areas.

(j) *Encourage urban development within existing zoned areas already served by basic infrastructure, or close to such areas, instead of scattered development*

**Comments:** The Hilo Family Entertainment Center is in an area zoned for resort and general commercial uses. It is located within an area served by municipal water and sewer systems.

**Land Use – Commercial Development**

**Goals**

(a) *Provide for commercial developments that maximize convenience to users*
(b) *Provide commercial developments that complement the overall pattern of transportation and land usage within the island's regions, communities, and neighborhoods.*

**Policies**

(b) *Commercial facilities shall be developed in areas adequately served by necessary services, such as water, utilities, sewers, and transportation systems. Should such services not be available, the development of more intensive uses should be in concert with a localized program of public and private capital improvements to meet the expected increased needs*
(e) *Encourage the concentration of commercial uses within and surrounding a central core area*
(f) *The development of commercial facilities should be designed to fit into the locale with minimal intrusion while providing the desired services. Appropriate infrastructure and design concerns shall be incorporated into the review of such developments*
(g) *Applicable ordinances shall be reviewed and amended as necessary to include considerations for urban design, aesthetic quality and the protection of amenities in adjacent areas through landscaping, open space and buffer areas*

**Comments:** The Hilo Family Entertainment Center is in an area zoned for resort and general commercial uses. It will be surrounded by other urban uses, which will prevent degradation of more environmentally sensitive areas outside the zone. The Hilo Family Entertainment Center will rehabilitate and make use of a portion of a former sugar mill area, long vacant, and will connect to municipal utility systems. As such it will be minimally intrusive to the urban-zoned area. The Hilo Family Entertainment Center will be convenient and accessible to and from other centers of activity in Hilo. The Hilo Family Entertainment Center landscaping will be designed to soften the appearance of buildings facing Hualani, Mililani and, Kekūanaō‘a streets, while also providing an inviting entry feature including appropriate signage.

**Land Use – Resort Development**

**Goals**

*(a) Maintain an orderly development of the visitor industry.*

**Policies**

(b) *Promote and encourage the rehabilitation and the optimum utilization of resort areas that are presently serviced by basic facilities and utilities.*

**Comments:** The Hilo Family Entertainment Center is sited in an area zoned for resort uses and general commercial uses. It will be surrounded by other urban uses, which will prevent degradation of more environmentally sensitive areas outside the zone. The development will rehabilitate and make use of a portion of a former sugar mill area, long vacant, and will connect to municipal utility systems. As such it will be minimally intrusive to the urban-zoned area.

(b) *Provide for resort development that maximizes conveniences to its users and optimizes the benefits derived by the residents of the County.*

**Comments:** It is expected that the Hilo Family Entertainment Center will provide recreation and dining opportunities to both visitors and residents.

### 5.2.2 Hawai‘i County Zoning

The County zoning is nearly all Resort-Hotel (V-.75) zoning district with a very small portion in the General Commercial – 7,500 square feet (CG-7.5) zoning district (Figure 6). According to the Hawai‘i County Code, “The V (resort-hotel) district applies to areas to accommodate the needs and desires of visitors, tourists and transient guests. It applies to specific areas where public roads and public utilities are available or where suitable alternative private facilities are assured. It may apply to a single isolated hotel or resort with or without a commercial mall or shopping section. During the pre-consultation process, the Planning Department wrote: “The proposed development will include a sports bar, 16,000 square feet of retail space, restaurant and family entertainment center. These uses all appear to be permitted uses in the County’s Resort-Hotel (V-.75) zoning district and the State Land Use Urban district.”

The height limit in the V district in the City of Hilo is 120 feet; the minimum building site area in lands zoned V is 15,000 square feet, and the minimum building site average width is 90 feet. The height limit in the CG in the City of Hilo is also 120 feet; the minimum building site area is 7,500 square feet, and the minimum building site average width is 60 feet. Plan approval is required for all new structures and additions to existing structures in both the V and CG districts.

### 5.2.3 Special Management Area

The County of Hawai‘i has established, “Rule 9, Special Management Area” under the County Planning Commission’s Rules of Practice and Procedure. The County implements the Special Management Area through State of Hawai‘i guidelines set forth in Section 205A-26, HRS, for the review of developments proposed in the Special Management Area.

**Comments:** The State's objectives and policies associated with 205A-26, HRS are discussed within this document in section 5.1.3 "Coastal Zone Management". A detailed examination of the policies and associated guidelines will be evaluated again with a Special Management Area Use Permit.

## 5.3 REQUIRED PERMITS AND APPROVALS

The following is a preliminary list of major approvals and permits that may be required for the implementation of the Hilo Family Entertainment Center.

| Permit or Approval | Approving Authority |
|---|---|
| Chapter 343, HRS | Hawai'i County Planning Department |
| Special Management Area Use Permit | Hawai'i County Planning Department |
| Lot Consolidation | Hawai'i County Planning Department |
| Plan Approval | Hawai'i County Planning Department |
| National Pollutant Discharge Elimination System (NPDES) | State Department of Health |
| Grading/Building Permits | Hawai'i County Department of Public Works |

# 6.0 ALTERNATIVES

Under *Hawai'i Administrative Rules*, Title 11, Chapter 200, Environmental Impact Statement Rules, Section 11-200-10(6), the alternatives to the proposed action considered are limited to those that would allow the objectives of the project to be met, while minimizing potential adverse environmental impacts. The feasible alternatives must also address the project's economic characteristics while responding to the surrounding land uses that will be impacted by the project. In conformance with applicable regulations, the following alternatives, including alternative sites and uses of the property, have been identified and investigated.

## 6.1 "NO-ACTION" ALTERNATIVE

The "no-action" alternative would leave the land vacant. This site is zoned by the County for resort (and commercial) use. This alternative would not be consistent with the County's intended use for the site. The economic benefits of developing the proposed site (employment, State income taxes, State excise taxes, and County real property taxes) outweigh the loss of underutilized land. For these reasons the "no-action" alternative has been rejected.

## 6.2 ALTERNATIVE USES

The Hawai'i County Code identifies permitted uses with the V (Resort) and CG (General Commercial) zoning districts. Nearly all of the Hilo Family Entertainment Center will be developed on the portion of the site with the V zoning district. Permitted uses within the V district include:

- Adult care homes;
- Amusement and recreational facilities, indoor;
- Art galleries, museums;
- Automobile service stations;
- Bars, night clubs and cabarets;
- Bed and breakfast establishments;
- Business services;
- Cemeteries and mausoleums;
- Churches, temples and synagogues;
- Commercial parking lots and garages;
- Community buildings;
- Day care centers;
- Dwellings, double-family, multi-family and single-family;
- Family child care homes;
- Financial institutions;
- Group living facilities;
- Home occupations;
- Hotels;
- Lodges;
- Medical clinics;
- Meeting facilities;
- Major outdoor amusement and recreation facilities;
- Model homes;

- Parks, playgrounds, tennis courts, swimming pools and other similar recreational facilities;
- Personal services;
- Photography studios;
- Public uses and structures;
- Restaurants;
- Retail establishments;
- Telecommunication antennas
- Temporary real estate offices;
- Theaters;
- Time share units;
- Utility substations;
- Visitor information centers.

In addition, other uses are permitted with a Use Permit including: crematoriums, golf courses and related golf course uses such golf driving ranges; and hospitals, sanitariums, old age, convalescent, nursing and rest homes. Each of the above uses may have similar, greater or lesser impacts on traffic, social acceptance, noise, air quality and visual aesthetics. Ho‘oluana Place LLC has reviewed the permitted uses, and considering the site size, location, access, surrounding land uses and their understanding of Hilo residents’ needs, selected the land uses which will present the least environmental and social impacts while providing a reasonable return on investment.

# 7.0 DETERMINATION, FINDINGS, AND REASONS FOR SUPPORTING DETERMINATION

This EA has evaluated the potential primary, secondary, and cumulative environmental impacts, both short-term and long-term, that could result from the proposed Hilo Family Entertainment Center. Mitigation measures have also been proposed as appropriate.

## 7.1 SIGNIFICANCE CRITERIA

According to the DOH, *Hawai'i Administrative Rules* (HAR) (§11-200-12 Significance Criteria), an applicant or agency must determine whether an action may have a significant impact on the environment, including all phases of the project, its expected consequences both primary and secondary, its cumulative impact with other projects and its short and long-term effects. The HAR establish a "significance criteria" to determine whether significant environmental impact will occur as a result of a proposed action. An action shall be determined to have a significant impact on the environment if it meets any one of the following criteria:

**(1) Involves an irrevocable commitment to loss or destruction of any natural or cultural resources**

The Hilo Family Entertainment Center is not anticipated to involve any construction activity that may lead to a loss or destruction of any natural or cultural resource. There is little potential for encountering such resources, as most of the area within the site had been previously graded and developed for the, Waiākea sugar mill which was closed in 1947.

**(2) Curtails the range of beneficial uses of the environment**

The Hilo Family Entertainment Center will not curtail the beneficial uses of the environment. The site, vacant for decades, was previously developed as part of former Waiākea sugar mill and is surrounded by various urban uses. The proposed use is consistent with the current zoning and surrounding uses in the area.

**(3) Conflicts with the State's long-term environmental policies or goals and guidelines as expressed in Chapter 344, HRS; and any revisions thereof and amendments thereto, court decisions, or executive orders**

The Hilo Family Entertainment Center is not in conflict with the long-term environmental policies, goals, and guidelines of the State of Hawai'i. This commercial use is proposed for central Hilo, where State and County land use designations direct development, rather than lands that are designated for open space or agricultural uses. As presented earlier in this EA, the Hilo Family Entertainment Center's potential adverse impacts are associated only with the short-term construction-related activities, and such impacts can be mitigated through adherence to standard construction mitigation practices.

**(4) Substantially affects the economic or social welfare of the community or State**

The Hilo Family Entertainment Center will have no adverse effects on the economy or social welfare of the City of Hilo or the County of Hawai‘i. Long-term social and economic benefits will manifest through the opportunity for new businesses and employment, and for the general public to utilize the products and services of these businesses.

**(5) Substantially affects public health**

There will be temporary impacts to noise, air and water quality levels during the construction phase of the Hilo Family Entertainment Center; however, these potential impacts will be short-term and are not expected to substantially affect public health. All construction activities will comply with applicable regulations and will implement appropriate mitigation measures. After construction, the development should have minimal impact on ambient noise levels or air and water quality.

**(6) Involves substantial secondary impacts, such as population changes or effects on public facilities**

The proposed recreational/commercial complex will serve the existing residents of Hilo and Hawai‘i County and its visitors. It will not induce any increases or shifts in population, and will not have a significant effect on any public facilities.

**(7) Involves a substantial degradation of environmental quality**

Construction activities associated with the Hilo Family Entertainment Center are anticipated to result in negligible short-term impacts to noise, air-quality, and traffic in the immediate vicinity. With the incorporation of the recommended mitigation measures during the construction period, the Hilo Family Entertainment Center will not result in degradation of environmental quality.

**(8) Is individually limited but cumulatively has considerable effect on the environment, or involves a commitment for larger actions**

The Hilo Family Entertainment Center involves development of a site with uses consistent with its current zoning and with surrounding urban uses. The Hilo Family Entertainment Center will not require a commitment for larger actions such as expansion of the existing sanitary sewer system or new County potable water well.

**(9) Substantially affects a rare, threatened or endangered species or its habitat**

There are no known, threatened, or endangered species of flora, fauna, or associated habitats located on the site that could be adversely affected by the construction and operation of the Hilo Family Entertainment Center.

**(10) Detrimentally affects air or water quality or ambient noise levels**

Construction activities for development of the property could potentially impact noise and air and water quality levels. However, these impacts will be short-term and are not expected to be detrimental. All construction activities will comply with applicable regulations and will implement appropriate mitigation measures as necessary. After construction, the development is not expected to adversely impact ambient noise levels or water and air quality. Although impervious surfaces will be created on currently undeveloped land, any increase in runoff would be accommodated by proposed drainage improvements and should not detrimentally affect water quality.

**(11) Affects or is likely to suffer damage by being located in an environmentally sensitive area, such as a flood plain, tsunami zone, beach, erosion-prone area, geologically hazardous land, estuary, freshwater, or coastal waters**

The development will not affect any environmentally sensitive area. The Hilo Family Entertainment Center is located outside a FIRM-designated flood plain and well inland from the coast. The Hilo Family Entertainment Center's facilities will be constructed in compliance with County of Hawai'i building codes, and the drainage improvements will be designed to minimize any potential of localized flooding. Additionally, the development will be built and operated in compliance with County-adopted codes to comply with special requirement related to the tsunami evacuation zone.

**(12) Substantially affects scenic vistas and view planes identified in County or State plans or studies**

The Hilo Family Entertainment Center will alter the visual setting by adding structures to existing land. The new structures, however, will comply with all applicable development standards of the existing zoning and will not significantly affect scenic views, as the buildings will be sited towards the western boundaries of the site providing significant setbacks from Kekūanaō'a and Mililani streets.

**(13) Requires substantial energy consumption.**

Construction and operation of the Hilo Family Entertainment Center will not require substantial increases in energy consumption.

## 7.2 DETERMINATION

The Planning Department does not foresee that the Hilo Family Entertainment Center will have significant adverse impacts on the existing natural, physical, or human environment, and the Planning Department, as the approving agency, has therefore issued a finding of no significant impact (FONSI).

(this page intentionally left blank)

# 8.0 CONSULTED PARTIES

## 8.1 AGENCIES CONSULTED IN THE PREPARATION OF THE DEA

On March 12, 2008, letters requesting pre-consultation comments on the Hilo Family Entertainment Centerwere sent to the parties listed below. Comment and response letters have been reproduced and are included in Appendix A. Those that responded are underlined.

**Community contacts**

Waiākea Villas Community Association

**County of Hawai'i**

Office of the Mayor
Department of Parks and Recreation
Department of Research and Development
Department of Water Supply
Department of Public Works
Department of Environmental Management
Department of Planning
Fire Department
Police Department

**State of Hawai'i**

Department of Health - Environmental Planning Office
Office of Environmental Quality Control
Department of Land and Natural Resources
State Historic Preservation Division, DLNR

**Private**

Hawaiian Electric Company, Inc., Environmental Department

## 8.2 COMMENTS TO THE DRAFT ENVIRONMENTAL ASSESSMENT

The following agencies and individuals were provided with copies of the Draft EA. Those underlined provided comments to the Draft EA. Appendix B contains all comment letters received and all responses.

**Community**

AOAO Waiākea Villas
Carolyn Redman
Hilo Public Library

**County of Hawai'i**

Department of Environmental Management
Fire Department
Police Department
Department of Planning

Department of Water Supply
Department of Public Works
Department of Parks and Recreation

**State of Hawai'i**

State Historic Preservation Division, DLNR
Office of Environmental Quality Control
State Department of Health, Environmental Planning Division
State Department of Health, Office of Hazard Evaluation and Emergency Response

**Utility Providers**

Hawai'i Electric Light Company

# 9.0 REFERENCES

Birnie, Ian (2007) http://www.tsunami.org/newsletter2.html

Haun, Alan E. Ph.D. (2008). *Archaeological Assessment TMK:(3) 2-2-30:17 and 19. Land of Waiakea South Hilo District Island of Hawai'i.* Prepared for Ho'oluana Place LLC.

Hawai'i County Code. http://co.hawaii.hi.us/countycode.html

Hawai'i, County of. Department of Public Works. (2008). *Summary of Departmental Requests Six Year Capital Improvements Program Fiscal Year 2008-2009.*

Hawai'i, County of. Department of Water Supply. *2002 Water System Standards*, *Section 111 – Water Requirements.*

Hawai'i, County of. Department of Water Supply. *(2006). Hawaii County Water Use and Development Plan Update.*

Hawaii Environmental. (2007). *Phase I Environmental Assessment.* Prepared for William Cohen.

Hawai'i, State Commission on Water Resources. (2005). *Island of Hawai'i Well Database.*

Hawai'i, State of. Department of Agriculture. (1977). *Agricultural Lands of Importance to the State of Hawai'i*. Honolulu, Hawai'i.

Hawai'i, State of. Department of Business and Economic Development and Tourism. (1993). *Hawai'i Model Energy Code*. Honolulu, Hawai'i.

Hawai'i, State of. Department of Health. (2006). *Soil Action Levels and Categories for Bioaccessible Arsenic.* Honolulu, Hawai'i.

Hawai'i, State of. Department of Health. (2007). *Technical Guidance Manual for the Implementation of the Hawai'i State Contingency Plan.* Honolulu, Hawai'i.

Hawai'i, State of. Land Use Commission http://luc.state.hi.us/

Hawai'i, State of. Office of Environmental Quality Control. (1999). *Guidelines for Sustainable Building Design in Hawai'i*. Honolulu, Hawai'i.

Hawai'i, State of. Office of State Planning. (1989). *The Hawai'i State Plan*. Honolulu, Hawai'i.

Juvik, S.P. (1998). *Atlas of Hawai'i*. 3rd Edition. Honolulu: University of Hawai'i Press. Honolulu, Hawai'i.

Rana Productions, Ltd. & Geometrician Associates, LLC. (2008). *A Survey of Botanical, Avian, and Terrestrial Mammialian Species for the Proposed Hilo Family Entertainment Center, South Hilo District, Island of Hawai'i.* Prepared for Ho'oluana Place LLC.

Robichaux, David. (2004). *East Hawai'i Regional Sort Station Final Environmental Impact Statement.* Prepared for the County of Hawai'i, Department of Environmental Management.

T.S. Dye and Colleagues, Archaeologists, Inc. (2008). *Cultural Impact Assessment for Hilo Family Entertainment Center in Waiākea, South Hilo, Hawai'i, TMK: (3) 2-2-030:17 & 19.* Prepared for Ho'oluana Place LLC.

U.S. Department of Agriculture Natural Resources Conservation Service. (August, 1972). *Islands of Kauai, Oahu, Maui, Molokai, and Lanai, State of Hawai'i*. Honolulu, Hawai'i.

U.S. Geological Service. Lava Flow Hazard Maps. http://pubs.usgs.gov/gip/hazards/maps.html.

Wilson Okamoto. (2003). *Final Environmental Assessment, Hilo International Airport.* Prepared for the Department of Transportation, Airports Division.

# Appendix A

Pre-consultation Correspondence

**Harry Kim**
*Mayor*

**Christopher J. Yuen**
*Director*

**Brad Kurokawa, ASLA**
**LEED® AP**
*Deputy Director*

County of Hawaii
**PLANNING DEPARTMENT**
101 Pauahi Street, Suite 3 • Hilo, Hawaii 96720-4224
(808) 961-8288 • FAX (808) 961-8742

RECEIVED MAR 2 9 2008

March 27, 2008

Ms. Rose Agbayani
PBR Hawaii & Associates, Inc.
101 Aupuni Street, Suite 310
Hilo, HI 96720

Dear Ms. Agbayani:

**Subject: Pre-consultation for Draft Environmental Assessment (EA)**
**Project: Hooluana Place, LLC Hilo Family Entertainment Center**
**Tax Map Key: (3) 2-2-30: 17 & 19; Waiākea, South Hilo, Hawaii**

This is in response to your letter dated March 12, 2008, in which you requested our comments on any special environmental conditions or impacts related to the proposed development.

The proposed development will include a sports bar, 16,000-square feet of retail space, restaurant and family entertainment center. These uses all appear to be permitted uses in the County's Resort-Hotel (V-.75) zoning district and the State Land Use Urban district.

The draft EA should include a discussion and analysis of impacts related to the following areas of public concern: noise generated from the site and its impact on surrounding residential neighborhoods, traffic and parking, and drainage. Additionally, since the site is located within a tsunami inundation zone a discussion of coastal hazards should be included.

The subject 6.23-acre site is located entirely within the County's Special Management Area (SMA), and therefore will require an SMA Major Use Permit from the Planning Commission.

*Hawai'i County is an Equal Opportunity Provider and Employer.*



Please provide this office with a copy of the draft EA upon its publication. Should you have questions, please contact Maija Cottle of my staff at 961-8288 extension 253.

Sincerely,

CHRISTOPHER J. YUEN
Planning Director

MJC:cs
P:\wpwin60\Maija\EA-EIS\Pre-Consult Comments\Hilo Family Entertainment Center 2-2-30-17&19 Pre-cmnts.doc

PBR HAWAII
& ASSOCIATES, INC.

PARTNERS
THOMAS S. WITTEN, ASLA
*President*

R. STAN DUNCAN, ASLA
*Executive Vice-President*

RUSSELL Y. J. CHUNG, FASLA
*Executive Vice-President*

VINCENT SHIGEKUNI
*Vice-President*

GRANT T. MURAKAMI, AICP
*Principal*

CHAIRMAN
W. FRANK BRANDT, FASLA
*Chairman*

ASSOCIATES
TOM SCHNELL, AICP
*Senior Associate*

RAYMOND T. HIGA, ASLA
*Senior Associate*

KEVIN K. NISHIKAWA, ASLA
*Associate*

KIMI MIKAMI YUEN, LEED AP*
*Associate*

SCOTT ALIKA ABRIGO
*Associate*

SCOTT MURAKAMI, ASLA, LEED AP*
*Associate*

HONOLULU OFFICE
1001 Bishop Street
ASB Tower, Suite 650
Honolulu, Hawai'i 96813-3484
Tel: (808) 521-5631
Fax: (808) 523-1402
E-mail: sysadmin@pbrhawaii.com

HILO OFFICE
101 Aupuni Street
Hilo Lagoon Center, Suite 310
Hilo, Hawai'i 96720-4262
Tel: (808) 961-3333
Fax: (808) 961-4989

WAILUKU OFFICE
1787 Wili Pā Loop, Suite 4
Wailuku, Hawai'i 96793-1271
Tel: (808) 242-7878

July 11, 2008

Mr. Christopher J. Yuen, Director
County of Hawai'i
Planning Department
101 Pauahi Street, Suite 3
Hilo, Hawai'i 96720-4224

SUBJECT: PRE-CONSULTATION FOR HILO FAMILY ENTERTAINMENT CENTER, HILO, HAWAI'I, TMK: (3) 2-2-30:17 and 19

Dear Mr. Yuen,

Thank you for your letter dated March 27, 2008 regarding Hilo Family Entertainment Center. As the planning consultant for the applicant, Ho'oluana Place LLC, we are responding to your comments.

The draft EA will include discussion of impacts and mitigation measures related to noise generated on site, traffic, parking and drainage. In addition, the draft EA will include discussion of impacts and mitigation measures related to the project's location in the tsunami inundation zone.

We acknowledge that the project site is within the SMA and will require an SMA Major Use Permit. We thank you for the information provided on county zoning for the project site.

The participation of County of Hawai'i Planning Department in the Environmental Assessment process is appreciated. The Draft EA will be provided to your Department when it is available.

Sincerely,

PBR HAWAII

Tom Schnell, AICP
Senior Associate

cc: Office of Environmental Quality Control
County of Hawai'i Planning Department
Thomas H. Yamamoto, Ho'oluana Place LLC

O:\Job26\2684.01 Hilo Family Entertainment Center\EA\Pre-consultation\Preconsult ltrs & responses\Planning Dept Response.doc



RECEIVED MAR 2 1 2008

Curtis and Carolyn Redman
400 Hualani St #336
Hilo, HI 96720
808-990-2647

March 18, 2008

PBR Hawaii
101 Aupuni St., Suite 310
Hilo, HI 96720

Aloha,

I am very pleased for you in developing the 6.23 acres of land located at the corner of Kekuananoa St and Mililani St. I wish you much prosperity.

I am an owner at the Waiakea Villas and have one question for you; how will you define your property from our property? It is my hope you will be fencing your property as to protect our parking space and vehicles from your customers using our space. I question our security.

Mahalo and good luck,

Carolyn E. Redman

**TO:** WAIAKEA VILLAS OWNERS AND TENANTS

**FR:** BOARD OF DIRECTORS
AOAO WAIAKEA VILLAS

**RE:** ENVIRONMENTAL ASSESSMENT BY PBR HAWAII

**DT:** MARCH 18, 2008

---

**Waiakea Villas Association is in receipt of a letter from PBR Hawaii. The agency is preparing an Environmental Assessment for the proposed Hilo Family Entertainment Center. The project site is the 6.23 acres of land identified as TMK (3) 2-2-30:17 and 19 located at the corner of Kekuanaoa St. and Mililani St. The Hilo Family Entertainment Center will include a sports bar, retail space, restaurant and a family entertainment center. The project will be built in two phases. The first phase will include the approximately 37,500 sq. ft. family entertainment center, a steak house, a restaurant, and a sports bar. The second phase involves the construction of approximately 16,000 sq. ft. of retail space. The site is within the State Urban district, Hawai'i County V-.75 Resort-Hotel zoning district, and the Special Management Area (SMA).**

**Please submit your comments in writing to AOAO Waiakea Villas at Building 9 Suite 294 by March 24, 2008. The Association in its response letter to PBR Hawaii will utilize your comments. Owners can legally submit their comments directly to PBR Hawaii at 101 Aupuni St., Suite 310, Hilo, HI 96720. Thank you for your cooperation in this request.**

PBR HAWAII
& ASSOCIATES, INC.

July 11, 2008

PARTNERS
THOMAS S. WITTEN, ASLA
*President*
R. STAN DUNCAN, ASLA
*Executive Vice-President*
RUSSELL Y. J. CHUNG, FASLA
*Executive Vice-President*
VINCENT SHIGEKUNI
*Vice-President*
GRANT T. MURAKAMI, AICP
*Principal*

CHAIRMAN
W. FRANK BRANDT, FASLA
*Chairman*

ASSOCIATES
TOM SCHNELL, AICP
*Senior Associate*
RAYMOND T. HIGA, ASLA
*Senior Associate*
KEVIN K. NISHIKAWA, ASLA
*Associate*
KIMI MIKAMI YUEN, LEED AP*
*Associate*
SCOTT ALIKA ABRIGO
*Associate*
SCOTT MURAKAMI, ASLA, LEED AP*
*Associate*

HONOLULU OFFICE
1001 Bishop Street
ASB Tower, Suite 650
Honolulu, Hawai'i 96813-3484
Tel: (808) 521-5631
Fax: (808) 523-1402
E-mail: sysadmin@pbrhawaii.com

HILO OFFICE
101 Aupuni Street
Hilo Lagoon Center, Suite 310
Hilo, Hawai'i 96720-4262
Tel: (808) 961-3333
Fax: (808) 961-4989

WAILUKU OFFICE
1787 Wili Pā Loop, Suite 4
Wailuku, Hawai'i 96793-1271
Tel: (808) 242-2878

Carolyn E. Redman
400 Hualani St. #336
Hilo, HI 96720

**SUBJECT:** PRE-CONSULTATION FOR HILO FAMILY ENTERTAINMENT CENTER, HILO, HAWAI'I, TMK: (3) 2-2-30:17 and 19

Dear Ms. Redman,

Thank you for your letter dated March 18, 2008 regarding Hilo Family Entertainment Center. As the planning consultant for the applicant, Ho'oluana Place LLC, we are responding to your question regarding how the property line will be defined.

At this time Ho'oluana Place LLC has not determined if a fence will be erected between the Hilo Family Entertainment Center and the Waiakea Villas. The majority of the Hilo Family Entertainment Center parking area will be toward the intersection of Kekūanaō'a and Mililani Streets; however your concerns regarding fencing and security are noted will be provided to Ho'oluana Place LLC.

Your participation in the Environmental Assessment process is appreciated. A copy of the Draft EA will be provided to the Waiakea Villas Association of Apartment Owners (AOAO) when it is available.

Sincerely,

PBR HAWAII

Tom Schnell, AICP
Senior Associate

cc: Office of Environmental Quality Control
County of Hawai'i Planning Department
Thomas H. Yamamoto, Ho'oluana Place LLC

O:\Job26\2684.01 Hilo Family Entertainment Center\EA\Pre-consultation\Preconsult ltrs & responses\Redman Response.doc

RECEIVED APR 1 4 2008

DEPARTMENT OF WATER SUPPLY • COUNTY OF HAWAI'I
345 KEKŪANAŌ'A STREET, SUITE 20 • HILO, HAWAI'I 96720
TELEPHONE (808) 961-8050 • FAX (808) 961-8657

April 8, 2008

Ms. Rose Agbayani
PBR Hawaii
101 Aupuni Street
Hilo Lagoon Center, Suite 310
Hilo, HI 96720

**PRE-ENVIRONMENTAL ASSESSMENT CONSULTATION**
**HOOLUANA PLACE, LLC**
**TAX MAP KEY 2-2-030:017 AND 019**

This is in response to your Pre-Environmental Assessment Consultation letter dated March 12, 2008.

Water can be made available from an existing 6-inch waterline within Kekuanaoa Street and from a 6-inch waterline within Mililani Street, both fronting the subject parcels. Prior to issuing a water commitment for the proposed project, the Department would request estimated maximum daily water usage calculations prepared by a professional engineer licensed in the State of Hawai'i for review. After review of the calculations, the Department will determine the water commitment deposit amount, facilities charges due, and other conditions for final approval.

Please be informed that the proposed facility will require that there be 2,000 gallons per minute available at the site for fire protection. The existing 6-inch waterlines described above should be adequate to provide the required fire flow.

Please also be informed that any meter(s) serving the proposed project will require the installation of a reduced principle type backflow prevention assembly within five feet of the meter on private property. The Department must inspect and approve the installation prior to commencement of water service.

Should there be any questions, please contact Mr. Finn McCall of our Water Resources and Planning Branch at 961-8070, extension 255.

Sincerely yours,

Milton D. Pavao, P.E.
Manager

FM:dfg

... Water brings progress...

The Department of Water Supply is an Equal Opportunity provider and employer. To file a complaint of discrimination, write: USDA, Director, Office of Civil Rights, Room 326-W, Whitten Building, 14th and Independence Avenue, SW, Washington DC 20250-9410. Or call (202) 720-5964 (voice and TDD)

PBR HAWAII
& ASSOCIATES, INC.

PARTNERS
THOMAS S. WITTEN, ASLA
*President*
R. STAN DUNCAN, ASLA
*Executive Vice-President*
RUSSELL Y. J. CHUNG, FASLA
*Executive Vice-President*
VINCENT SHIGEKUNI
*Vice-President*
GRANT T. MURAKAMI, AICP
*Principal*

CHAIRMAN
W. FRANK BRANDT, FASLA
*Chairman*

ASSOCIATES
TOM SCHNELL, AICP
*Senior Associate*
RAYMOND T. HIGA, ASLA
*Senior Associate*
KEVIN K. NISHIKAWA, ASLA
*Associate*
KIMI MIKAMI YUEN, LEED AP®
*Associate*
SCOTT ALIKA ABRIGO
*Associate*
SCOTT MURAKAMI, ASLA, LEED AP®
*Associate*

HONOLULU OFFICE
1001 Bishop Street
ASB Tower, Suite 650
Honolulu, Hawai'i 96813-3484
Tel: (808) 521-5631
Fax: (808) 523-1402
E-mail: sysadmin@pbrhawaii.com

HILO OFFICE
101 Aupuni Street
Hilo Lagoon Center, Suite 310
Hilo, Hawai'i 96720-4262
Tel: (808) 961-3333
Fax: (808) 961-4959

WAILUKU OFFICE
1787 Wili Pā Loop, Suite 4
Wailuku, Hawai'i 96793-1271
Tel: (808) 242-2878

July 11, 2008

Mr. Milton D. Pavao, PE, Manager
Department of Water Supply
County of Hawai'i
345 Kekūanaōa'a Street, Suite 20
Hilo, Hawai'i 96720

SUBJECT: PRE-CONSULTATION FOR HILO FAMILY ENTERTAINMENT CENTER, HILO, HAWAI'I, TMK: (3) 2-2-30:17 and 19

Dear Mr. Pavao,

Thank you for your letter dated April 8, 2008 regarding Hilo Family Entertainment Center. As the planning consultant for the applicant, Ho'oluana Place LLC, we are responding to your comments.

Existing waterlines: We appreciate the information on the two six-inch waterlines within Kekuanaoa and Mililani Streets. This information will be included in the draft EA. Prior to issuance of a water commitment, a licensed professional engineer will submit estimated maximum daily water usage calculations to your Department. We understand that after this review you will determine the water commitment deposit amount, facilities charges due, and any other conditions prior to final approval.

Fire protection: Thank you for the information on water volume required for fire protection at the site and the adequacy of the existing lines.

Meters: A reduced principle type backflow prevention assembly will be installed within five feet of any meters serving the project. This will be done on private property and will be subject to prior inspection and approval by your Department.

The participation of the Department of Water Supply in the Environmental Assessment process is appreciated. A copy of the Draft EA will be provided to your Department when it is available.

Sincerely,

PBR HAWAII

Tom Schnell, AICP
Senior Associate

cc: Office of Environmental Quality Control
County of Hawai'i Planning Department
Thomas H. Yamamoto, Ho'oluana Place LLC

O:\Job26\2684.01 Hilo Family Entertainment Center\EA\Pre-consultation\Preconsult ltrs & responses\DWS Response.doc

RECEIVED MAR 2 0 2008

Harry Kim
*Mayor*

Darryl J. Oliveira
*Fire Chief*

Glen P.I. Honda
*Deputy Fire Chief*

County of Hawai'i
HAWAI'I FIRE DEPARTMENT
25 Aupuni Street • Suite 103 • Hilo, Hawai'i 96720
(808) 981-8394 • Fax (808) 981-2037

March 17, 2008

PBR Hawaii –Hilo Office
101 Aupuni Street
Hilo Lagoon Center, Suite 310
Hilo, Hawaii 96720-4262

**SUBJECT:** DRAFT ENVIRONMENTAL ASSESSMENT
PROJECT: HILO FAMILY ENTERTAINMENT CENTER, WAIAKEA
TAX MAP KEY: (3) 2-2-30:17 AND 19

We have no comments in regards to the above-mentioned Draft Environmental Assessment.

DARRYL OLIVEIRA
Fire Chief

PBE:lpc

*Hawai'i County is an Equal Opportunity Provider and Employer.*

Harry Kim
*Mayor*

Darryl J. Oliveira
*Fire Chief*

Glen P.I. Honda
*Deputy Fire Chief*

County of Hawai'i
HAWAI'I FIRE DEPARTMENT
25 Aupuni Street • Suite 103 • Hilo, Hawai'i 96720
(808) 981-8394 • Fax (808) 981-2037

June 4, 2008

PBR Hawaii –Hilo Office
101 Aupuni Street
Hilo Lagoon Center, Suite 310
Hilo, Hawaii 96720-4262

**SUBJECT:** DRAFT ENVIRONMENTAL ASSESSMENT
PROJECT: HILO FAMILY ENTERTAINMENT CENTER, WAIAKEA
TAX MAP KEY: (3) 2-2-30:17 AND 19

We have no comments in regards to the above-mentioned Draft Environmental Impact Statement.

DARRYL OLIVEIRA
Fire Chief

GA:lpc

*Hawai'i County is an Equal Opportunity Provider and Employer.*

PBR HAWAII
& ASSOCIATES, INC.

PARTNERS
THOMAS S. WITTEN, ASLA
*President*

R. STAN DUNCAN, ASLA
*Executive Vice-President*

RUSSELL Y. J. CHUNG, FASLA
*Executive Vice-President*

VINCENT SHIGEKUNI
*Vice-President*

GRANT T. MURAKAMI, AICP
*Principal*

CHAIRMAN
W. FRANK BRANDT, FASLA
*Chairman*

ASSOCIATES
TOM SCHNELL, AICP
*Senior Associate*

RAYMOND T. HIGA, ASLA
*Senior Associate*

KEVIN K. NISHIKAWA, ASLA
*Associate*

KIMI MIKAMI YUEN, LEED AP*
*Associate*

SCOTT ALIKA ABRIGO
*Associate*

SCOTT MURAKAMI, ASLA, LEED AP*
*Associate*

HONOLULU OFFICE
1001 Bishop Street
ASB Tower, Suite 650
Honolulu, Hawai'i 96813-3484
Tel: (808) 521-5631
Fax: (808) 523-1402
E-mail: sysadmin@pbrhawaii.com

HILO OFFICE
101 Aupuni Street
Hilo Lagoon Center, Suite 310
Hilo, Hawai'i 96720-4262
Tel: (808) 961-3333
Fax: (808) 961-4959

WAILUKU OFFICE
1787 Wili Pā Loop, Suite 4
Wailuku, Hawai'i 96793-1271
Tel: (808) 242-2878

July 11, 2008

County of Hawai'i Fire Department
Attn: Chief Oliveira
25 Aupuni Street, Suite 103
Hilo, Hawai'i 96720

**SUBJECT: PRE-CONSULTATION FOR HILO FAMILY ENTERTAINMENT CENTER, HILO, HAWAI'I, TMK: (3) 2-2-30:17 and 19**

Dear Chief Oliveira,

Thank you for your letters dated March 17, and June 4, 2008 regarding Hilo Family Entertainment Center. As the planning consultant for the applicant, Ho'oluana Place LLC, we acknowledge that your department has no comments at this time.

The participation of Hawai'i Fire Department in the Environmental Assessment process is appreciated.

Sincerely,

PBR HAWAII

Tom Schnell, AICP
Senior Associate

cc: Office of Environmental Quality Control
County of Hawai'i Planning Department
Thomas H. Yamamoto, Ho'oluana Place LLC

O:\Job26\2684.01 Hilo Family Entertainment Center\EA\Pre-consultation\Preconsult ltrs & responses\Fire Response.doc



RECEIVED MAR 2 0 2008

**AOAO WAIAKEA VILLAS**
**400 Hualani St., Suite 294**
**Hilo, Hawaii 96720**
**(808)961-3239 Tel**

March 18, 2008

Ms. Rose Agbayani, Office Manager/Planner
PBR HAWAII & ASSOCIATES, INC.
101 Aupuni Street
Hilo Lagoon Center, Suite 310
Hilo, Hawaii 96720

Subject: Hooluana Place, LLC

Dear Ms. Agbayani:

Your agency's letter dated March 12, 2008 was received and reviewed on March 18, 2008. I am requesting a one week extension to the response due date from March 28, 2008 to April 04, 2008.

The extension will provide opportunity to inform both owners and residents of the proposed Hilo Family Entertainment Center and receive comments from them.

Thank you for your consideration of this request. Please contact Gwen De Coito at 961-3239 with your response.

Sincerely,
AOAO WAIAKEA VILLAS

Jim Baldwin
President

Cc: C. Lindner, Hooluana Place LLC
T. Yamamoto, Thomas H. Yamamoto LLC

PBR HAWAII
& ASSOCIATES, INC.

PARTNERS
THOMAS S. WITTEN, ASLA
*President*

R. STAN DUNCAN, ASLA
*Executive Vice-President*

RUSSELL Y. J. CHUNG, FASLA
*Executive Vice-President*

VINCENT SHIGEKUNI
*Vice-President*

GRANT T. MURAKAMI, AICP
*Principal*

CHAIRMAN
W. FRANK BRANDT, FASLA
*Chairman*

ASSOCIATES
TOM SCHNELL, AICP
*Senior Associate*

RAYMOND T. HIGA, ASLA
*Senior Associate*

KEVIN K. NISHIKAWA, ASLA
*Associate*

KIMI MIKAMI YUEN, LEED AP*
*Associate*

SCOTT ALIKA ABRIGO
*Associate*

SCOTT MURAKAMI, ASLA, LEED AP*
*Associate*

HONOLULU OFFICE
1001 Bishop Street
ASB Tower, Suite 650
Honolulu, Hawai'i 96813-3434
Tel: (808) 521-5631
Fax: (808) 523-1402
E-mail: sysadmin@pbrhawaii.com

HILO OFFICE
101 Aupuni Street
Hilo Lagoon Center, Suite 310
Hilo, Hawai'i 96720-4262
Tel: (808) 961-3333
Fax: (808) 961-4989

WAILUKU OFFICE
1787 Wili Pā Loop, Suite 4
Wailuku, Hawai'i 96793-1271
Tel: (808) 242-2878

July 11, 2008

AOAO Waiakea Villas
Attn: Jim Baldwin, President
400 Hualani Street, Suite 294
Hilo, HI 96720

**SUBJECT: PRE-CONSULTATION FOR HILO FAMILY ENTERTAINMENT CENTER, HILO, HAWAI'I, TMK: (3) 2-2-30:17 and 19**

Dear Mr. Baldwin,

Thank you for your letter dated March 18, 2008 regarding Hilo Family Entertainment Center. As the planning consultant for the applicant, Ho'oluana Place LLC, we are responding to your comments.

We acknowledge your request for additional opportunity to comment in response to our pre-consultation letter dated March 12, 2008. I believe Rose Agbayani of PBR Hawaii had contacted you via phone to indicate that additional time for AOAOA Waiakea Villas to provide comments would be acceptable. However, besides your March 18 letter requesting an extension, we did not receive any additional comments from the AOAO Waiakea Villas. We did receive comments from Carolyn Redman, who is an owner at Waiakea Villas.

The pre-consultation process is now finished are we have moved on to the next step of preparing a Draft Environmental Assessment for the Hilo Family Entertainment

A copy of the Draft Environmental Assessment will be provided to the AOAO Waiakea Villas when it is available. There will be a 30-day public comment period on the Draft EA. We welcome comments from the AOAO Waiakea Villas during this time.

The participation of the Waiakea Villas Community in the Environmental Assessment process is appreciated.

Sincerely,

PBR HAWAII

Tom Schnell, AICP
Senior Associate

cc: Office of Environmental Quality Control
County of Hawai'i Planning Department
Thomas H. Yamamoto, Ho'oluana Place LLC

O:\Job26\2684.01 Hilo Family Entertainment Center\EA\Pre-consultation\Preconsult ltrs & responses\Waiakea Villas Response.doc



Rec 4/18/08 571

LINDA LINGLE
GOVERNOR OF HAWAII

LAURA H. THIELEN
CHAIRPERSON
BOARD OF LAND AND NATURAL RESOURCES
COMMISSION ON WATER RESOURCE MANAGEMENT

RUSSELL Y. TSUJI
FIRST DEPUTY

KEN C. KAWAHARA
DEPUTY DIRECTOR - WATER

AQUATIC RESOURCES
BOATING AND OCEAN RECREATION
BUREAU OF CONVEYANCES
COMMISSION ON WATER RESOURCE MANAGEMENT
CONSERVATION AND COASTAL LANDS
CONSERVATION AND RESOURCES ENFORCEMENT
ENGINEERING
FORESTRY AND WILDLIFE
HISTORIC PRESERVATION
KAHOOLAWE ISLAND RESERVE COMMISSION
LAND
STATE PARKS

STATE OF HAWAII
DEPARTMENT OF LAND AND NATURAL RESOURCES

STATE HISTORIC PRESERVATION DIVISION
601 KAMOKILA BOULEVARD, ROOM 555
KAPOLEI, HAWAII 96707

April 15, 2008

Alan Haun, Ph.D.
HCR 1 Box 4730
Keaau, Hawaii 96749

LOG NO: 2008.1019
DOC NO: 0804MD15
Archaeology

Dear Dr. Haun:

SUBJECT: Chapter 6E-42 Historic Preservation Review –
Request for "No Historic Properties Affected" for an Archaeological Assessment of a 6.23 acre parcel
**Waiakea Ahupua'a, South Hilo District, Island of Hawai'i**
**TMK: (3) 2-2-30:17 and 19**

Thank you for the opportunity to comment on the aforementioned project. We determine that no historic properties will be affected by this project because:

- ☐ Intensive cultivation has altered the land
- ☐ Residential development/urbanization has altered the land
- ☐ Previous grubbing/grading has altered the land
- ☐ An accepted archaeological inventory survey (AIS) found no historic properties
- ☐ SHPD previously reviewed this project and mitigation has been completed
- ☒ Other: *The site visit conducted by Haun & Associates archaeologists on February 20, 2008 (Haun & Associates Archaeological Assessment TMK: (3) 2-2-30:17 and 19, Land of Waiakea, South Hilo District, Island of Hawai'i) reported no archaeological sites or features and SHPD hereby concurs.*

In the event that historic resources, including human skeletal remains, cultural materials, lava tubes, and/or lava blisters/bubbles are identified during the construction activities, all work needs to cease in the immediate vicinity of the find, the find needs to be protected from additional disturbance, and the State Historic Preservation Division, Hawaii Island Section, needs to be contacted immediately at (808) 981-2979.

Please contact Morgan Davis at (808) 981-2979 if you have any questions or concerns regarding this letter.

Aloha,

Nancy McMahon, Archaeology Branch Chief
State Historic Preservation Division

Cc:

Hooluana Place LLC, PO Box 5508, Hilo, HI 96720

# PBR HAWAII
& ASSOCIATES, INC.

PARTNERS
THOMAS S. WITTEN, ASLA
*President*
R. STAN DUNCAN, ASLA
*Executive Vice-President*
RUSSELL Y. J. CHUNG, FASLA
*Executive Vice-President*
VINCENT SHIGEKUNI
*Vice-President*
GRANT T. MURAKAMI, AICP
*Principal*

CHAIRMAN
W. FRANK BRANDT, FASLA
*Chairman*

ASSOCIATES
TOM SCHNELL, AICP
*Senior Associate*
RAYMOND T. HIGA, ASLA
*Senior Associate*
KEVIN K. NISHIKAWA, ASLA
*Associate*
KIMI MIKAMI YUEN, LEED AP*
*Associate*
SCOTT ALIKA ABRIGO
*Associate*
SCOTT MURAKAMI, ASLA, LEED AP*
*Associate*

HONOLULU OFFICE
1001 Bishop Street
ASB Tower, Suite 650
Honolulu, Hawai'i 96813-3484
Tel: (808) 521-5631
Fax: (808) 523-1402
E-mail: sysadmin@pbrhawaii.com

HILO OFFICE
101 Aupuni Street
Hilo Lagoon Center, Suite 310
Hilo, Hawai'i 96720-4262
Tel: (808) 961-3333
Fax: (808) 961-4989

WAILUKU OFFICE
1787 Wili Pā Loop, Suite 4
Wailuku, Hawai'i 96793-1271
Tel: (808) 242-2878

July 11, 2008

Nancy McMahon, Archaeology Branch Chief,
Department of Land and Natural Resources
State Historic Preservation Division
601 Kamokila Bouldvard, Room 555
Kapolei, HI 96707

SUBJECT: PRE-CONSULTATION FOR HILO FAMILY ENTERTAINMENT CENTER, HILO, HAWAI'I, TMK: (3) 2-2-30:17 and 19

Dear Ms. McMahon,

Thank you for your letter addressed to Alan Haun, Ph.D. dated April 15, 2008 regarding the Hilo Family Entertainment Center (TMK: (3) 2-2-30:17 and 19).

As the planning consultant for the applicant, Ho'oluana Place LLC, we acknowledge that SHPD has determined that no historic properties will be affected by the project because the site visit conducted by Haun & Associates archaeologists reported no archaeological sites or features.

In the event that historic resources, including human skeletal remains, cultural materials, lava tubes, and/or lava blisters/bubbles are identified during the construction activities, all work will cease and the State Historic Preservation Division, Hawai'i Island Section will be contacted immediately.

The participation of SHPD in the Environmental Assessment process is appreciated.

Sincerely,

PBR HAWAII

Tom Schnell, AICP
Senior Associate

cc: Office of Environmental Quality Control
County of Hawai'i Planning Department
Thomas H. Yamamoto, Ho'oluana Place LLC

O:\ob26\2684.01 Hilo Family Entertainment Center\EA\Pre-consultation\Preconsult ltrs & responses\SHPD Response.doc



MAR-28-2008 FRI 02:09 PM WASTEWATER DIVISION ADM. FAX NO. 9618644 P. 01/01
RECEIVED MAR 2 8 2008

**DEPARTMENT OF ENVIRONMENTAL MANAGEMENT**
***WASTEWATER DIVISION***
COUNTY OF HAWAI'I – 108 RAILROAD AVENUE – HILO, HI 96720-4252
HILO (808) 961-8512 FAX (808) 961-8644

March 28, 2008

PBR Hawaii & Associates
101 Aupuni Street
Hilo Lagoon Center, Suite 310
Hilo, Hawaii 96720

Subject: Hooluana Place, LLC
Hilo Family Entertainment Center
TMK: 2-2-030:017 & 019

The Wastewater Division is granting the above-mentioned project tentative approval for connection to the sewer lateral located on Mililani Street. Based on the information provided, the developer will be constructing a family entertainment center, a steak house, a restaurant, and a sports bar. The second phase will involve a 16,000 sq.ft of retail space.

Final approval will be contingent on the receipt and approval of plans and details for the project, as well as, sewer studies and calculations as per the City and County of Honolulu-Design Standards, Volume 1.

Should you have any questions please call Toni Nakatani (808)961-8512 (anakatani@co.hawaii.hi.us) or myself at (808)961-8513 (bsaito@co.hawaii.hi.us).

Bert Saito, P.E.
Wastewater Division Chief

Enclosure

Hawai'i County is an equal opportunity provider and employer.

RECEIVED APR 0 8 2008

Harry Kim
*Mayor*

Bobby Jean Leithead-Todd
*Director*

Nelson Ho
*Deputy Director*

County of Hawaii
DEPARTMENT OF ENVIRONMENTAL MANAGEMENT
25 Aupuni Street • Hilo, Hawai'i 96720-4252
(808) 961-8083 • Fax (808) 961-8086
http://co.hawaii.hi.us/directory/dir_envmng.htm

April 3, 2008

Ms. Rose Agbayani
Office Manager/Planner
PBR Hawaii
101 Aupuni Street, Suite 310
Hilo, HI 96720

Subject: Environmental Assessment
Hooluana Place, LLC
Hilo Family Entertainment Center – Pre-consultation
TMK: (3) 2-2-30:17 and 19

Dear Ms. Agbayani,

We have the following comments:

Wastewater Division
Development must connect to the County Sewer.

Thank you for allowing us the opportunity to review and comment on this project. If you have any questions, please contact Toni Nakatani, 961-8512, or Bert Saito, Wastewater Division Chief, 961-8513.

Sincerely,

Bobby Jean Leithead Todd
DIRECTOR

cc: WWD

10563t

*Hawai'i County is an equal opportunity provider and employer.*

PBR HAWAII
& ASSOCIATES, INC.

PARTNERS
THOMAS S. WITTEN, ASLA
*President*
R. STAN DUNCAN, ASLA
*Executive Vice-President*
RUSSELL Y. J. CHUNG, FASLA
*Executive Vice-President*
VINCENT SHIGEKUNI
*Vice-President*
GRANT T. MURAKAMI, AICP
*Principal*

CHAIRMAN
W. FRANK BRANDT, FASLA
*Chairman*

ASSOCIATES
TOM SCHNELL, AICP
*Senior Associate*
RAYMOND T. HIGA, ASLA
*Senior Associate*
KEVIN K. NISHIKAWA, ASLA
*Associate*
KIMI MIKAMI YUEN, LEED AP*
*Associate*
SCOTT ALIKA ABRIGO
*Associate*
SCOTT MURAKAMI, ASLA, LEED AP*
*Associate*

HONOLULU OFFICE
1001 Bishop Street
ASB Tower, Suite 650
Honolulu, Hawai'i 96813-3484
Tel: (808) 521-5631
Fax: (808) 523-1402
E-mail: sysadmin@pbrhawaii.com

HILO OFFICE
101 Aupuni Street
Hilo Lagoon Center, Suite 310
Hilo, Hawai'i 96720-4262
Tel: (808) 961-3333
Fax: (808) 961-4989

WAILUKU OFFICE
1787 Wili Pā Loop, Suite 4
Wailuku, Hawai'i 96793-1271
Tel: (808) 242-2878

July 11, 2008

Bobby Jean Leithead Todd, Director,
County of Hawai'i
Department of Environmental Management
25 Apuni Street
Hilo, HI 96720-4252

SUBJECT: PRE-CONSULTATION FOR HILO FAMILY ENTERTAINMENT CENTER, HILO, HAWAI'I, TMK: (3) 2-2-30:17 and 19

Dear Ms. Leithead Todd,

Thank you for the Department of Environmental Management's letters dated March 28 and April 3, 2008 regarding Hilo Family Entertainment Center. As the planning consultant for the applicant, Ho'oluana Place LLC, we are responding to your comments.

We acknowledge the project must connect to the County sewer system and that the Wastewater Division is granting tentative approval for connection to the sewer lateral on Mililani Street.

As project plans progress, Ho'oluana Place LLC will provide plans and details of the project (including sewer studies and calculations) to the Department of Environmental Management for review and approval.

The participation of the Department of Environmental Management in the Environmental Assessment process is appreciated. A copy of the Draft EA will be provided to your department when it is available.

Sincerely,

PBR HAWAII

Tom Schnell, AICP
Senior Associate

cc: Office of Environmental Quality Control
County of Hawai'i Planning Department
Thomas H. Yamamoto, Ho'oluana Place LLC
Bert Saito, Department of Environmental Management, Wastewater Division

O:\Job26\2684.01 Hilo Family Entertainment Center\EA\Pre-consultation\Preconsult ltrs & responses\DEM & Waste Water Division Response.doc

# Appendix B

Draft Environmental Assessment
Comment Letters and Responses

LINDA LINGLE
GOVERNOR OF HAWAII

LAURA H. THIELEN
CHAIRPERSON
BOARD OF LAND AND NATURAL RESOURCES
COMMISSION ON WATER RESOURCE MANAGEMENT

RUSSELL Y. TSUJI
FIRST DEPUTY

KEN C. KAWAHARA
DEPUTY DIRECTOR - WATER

AQUATIC RESOURCES
BOATING AND OCEAN RECREATION
BUREAU OF CONVEYANCES
COMMISSION ON WATER RESOURCE MANAGEMENT
CONSERVATION AND COASTAL LANDS
CONSERVATION AND RESOURCES ENFORCEMENT
ENGINEERING
FORESTRY AND WILDLIFE
HISTORIC PRESERVATION
KAHOOLAWE ISLAND RESERVE COMMISSION
LAND
STATE PARKS

**STATE OF HAWAII**
**DEPARTMENT OF LAND AND NATURAL RESOURCES**

STATE HISTORIC PRESERVATION DIVISION
601 KAMOKILA BOULEVARD, ROOM 555
KAPOLEI, HAWAII 96707

October 31, 2008

Tom Schnell
PBR Hawaii & Associates, Inc.
ASB Tower, Suite 650
1001 Bishop Street
Honolulu, Hawaii 96813

LOG NO: 2008.4671
DOC NO: 0810MD39
Archaeology

Dear Mr. Schnell:

**SUBJECT: Chapter 6E-42 Historic Preservation Review –**
**Request for Comment on a Draft Environmental Assessment for the Proposed Hilo Family Entertainment Center**
**Waiakea Ahupua`a, South Hilo District, Island of Hawaii**
**TMK: (3) 2-2-030:017 & 019**

Thank you for the opportunity to comment on the aforementioned project, which we received on October 21, 2008. We determine that **no historic properties will be affected** by this project because:

- ☐ Intensive cultivation has altered the land
- ☐ Residential development/urbanization has altered the land
- ☐ Previous grubbing/grading has altered the land
- ☒ An accepted archaeological inventory survey (AIS) found no historic properties
- ☐ SHPD previously reviewed this project and mitigation has been completed
- ☒ Other: *An archaeological assessment was prepared for this project (Haun 2008) which found no historic properties, and SHPD concurred (Log No. 2008.1019, Doc No. 0804MD15).*

In the event that historic resources, including human skeletal remains, cultural materials, lava tubes, and lava blisters/bubbles are identified during the construction activities, all work needs to cease in the immediate vicinity of the find, the find needs to be protected from additional disturbance, and the State Historic Preservation Division, Hawaii Island Section, needs to be contacted immediately at (808) 933-7650. If you have questions about this letter please contact Morgan Davis at (808) 933-7650.

Aloha,

Nancy A. McMahon

Nancy McMahon, Deputy SHPO/State Archaeologist
and Historic Preservation Manager
State Historic Preservation Division

Cc: Office of Environmental Quality Control
235 South Beretania Street, Suite 702
Honolulu, Hawaii 96813

# PBR HAWAII
& ASSOCIATES, INC.

PARTNERS
THOMAS S. WITTEN, ASLA
*President*

R. STAN DUNCAN, ASLA
*Executive Vice-President*

RUSSELL Y. J. CHUNG, FASLA
*Executive Vice-President*

VINCENT SHIGEKUNI
*Vice-President*

GRANT T. MURAKAMI, AICP
*Principal*

CHAIRMAN
W. FRANK BRANDT, FASLA
*Chairman*

ASSOCIATES
TOM SCHNELL, AICP
*Senior Associate*

RAYMOND T. HIGA, ASLA
*Senior Associate*

KEVIN K. NISHIKAWA, ASLA
*Associate*

KIMI MIKAMI YUEN, LEED AP®
*Associate*

SCOTT ALIKA ABRIGO
*Associate*

SCOTT MURAKAMI, ASLA, LEED AP®
*Associate*

HONOLULU OFFICE
1001 Bishop Street
ASB Tower, Suite 650
Honolulu, Hawai'i 96813-3484
Tel: (808) 521-5631
Fax: (808) 523-1402
E-mail: sysadmin@pbrhawaii.com

HILO OFFICE
101 Aupuni Street
Hilo Lagoon Center, Suite 310
Hilo, Hawai'i 96720-4262
Tel: (808) 961-3333
Fax: (808) 961-4989

WAILUKU OFFICE
1787 Wili Pā Loop, Suite 4
Wailuku, Hawai'i 96793-1271
Tel: (808) 242-2878

January 16, 2009

Nancy McMahon, Archaeology Branch Chief,
Department of Land and Natural Resources
State Historic Preservation Division
601 Kamokila Bouldvard, Room 555
Kapolei, HI 96707

**SUBJECT: HILO FAMILY ENTERTAINMENT CENTER – KEKUANAOA & MILILIANI STREETS - TMK: (3) 2-2-30:17 and 19**

Dear Ms. McMahon,

Thank you for your comments to the Draft Environmental Assessment for the Hilo Family Entertainment Center (TMK: (3) 2-2-30:17 and 19).

As the planning consultant for the applicant, Ho'oluana Place LLC, we acknowledge that SHPD has determined that no historic properties will be affected by the project because the site visit conducted by Haun & Associates archaeologists reported no archaeological sites or features.

In the event that historic resources, including human skeletal remains, cultural materials, lava tubes, and/or lava blisters/bubbles are identified during the construction activities, all work will cease and the State Historic Preservation Division, Hawai'i Island Section will be contacted immediately.

The participation of SHPD in the Environmental Assessment process is appreciated.

Sincerely,

PBR HAWAII

Tom Schnell, AICP
Senior Associate

cc: Katherine Kealoha, Office of Environmental Quality Control
Thomas H. Yamamoto, Ho'oluana Place LLC

O:\Job26\2684.01 Hilo Family Entertainment Center\EA\DEA Comments and Responses\DEA Responses\SHPD Response.doc

State of Hawaii
Department of Health
Environmental Planning Office
919 Ala Moana Blvd., 3rd Fl.
Honolulu, HI 96814

G 011 H 352

UNITED STATES POSTAGE
PITNEY BOWES
02 1M $ 00.42⁰
0004216784 NOV 25 2008
MAILED FROM ZIP CODE 96813

Mr. Tom Schnell
PBR Hawaii
ASB Tower, Suite 650
1001 Bishop Street
Honolulu, HI 96813

RECEIVED
NOV 2 ? 2008
Environmental

96813-3484 C001

LINDA LINGLE
GOVERNOR OF HAWAII

CHIYOME L. FUKINO, M.D.
DIRECTOR OF HEALTH

STATE OF HAWAII
DEPARTMENT OF HEALTH
P.O. Box 3378
HONOLULU, HAWAII 96801-3378

In reply, please refer to:
EPO-08-154

November 20, 2008

Mr. Tom Schnell
PBR Hawaii
ASB Tower, Suite 650
1001 Bishop Street
Honolulu, Hawaii 96813

Dear Mr. Schnell:

SUBJECT: Draft Environmental Assessment (DEA) for Hilo Family Entertainment Center
South Hilo, Island of Hawaii, Hawaii
TMK: (3) 2-2-030: 017 and 019

Thank you for allowing us to review and comment on the subject application. The document was routed to the various branches of the Department of Health (DOH) Environmental Health Administration. We have the following Clean Water Branch, Hazard Evaluation & Emergency Response Office (HEER) and General comments.

Clean Water Branch

The Department of Health (Department), Clean Water Branch (CWB), has reviewed the subject document and offers these comments on your project. Please note that our review is based solely on the information provided in the subject document and its compliance with Hawaii Administrative Rules (HAR), Chapters 11-54 and 11-55. You may be responsible for fulfilling additional requirements related to our program. We recommend that you also read our standard comments on our website at http://www.hawaii.gov/health/environmental/env-planning/landuse/CWB-standardcomment.pdf.

1. Any project and its potential impacts to State waters must meet the following criteria:

   a. Antidegradation policy (HAR, Section 11-54-1.1), which requires that the existing uses and the level of water quality necessary to protect the existing uses of the receiving State water be maintained and protected.

   b. Designated uses (HAR, Section 11-54-3), as determined by the classification of the receiving State waters.

   c. Water quality criteria (HAR, Sections 11-54-4 through 11-54-8).

2. You are required to obtain a National Pollutant Discharge Elimination System (NPDES) permit for discharges of wastewater, including storm water runoff, into State surface waters (HAR, Chapter 11-55). For the following types of discharges into Class A or Class 2 State waters, you may apply for NPDES general permit coverage by submitting a Notice of Intent (NOI) form:

   a. Storm water associated with construction activities, including excavation, grading, clearing, demolition, uprooting of vegetation, equipment staging, and storage areas that result in the disturbance of equal to or greater than one (1) acre of total land area. The total land area includes a contiguous area where multiple separate and distinct construction activities may be taking place at different times on different schedules under a larger common plan of development or sale. An NPDES permit is required before the start of the construction activities.

      Be aware that a Hazard Evaluation and Emergency Response (HEER) approved Pesticide Soil Management (PSM) Plan, i.e. arsenic, shall be submitted with the NPDES permit application. Depending on HEER's determination, discharge of storm water contacting pesticide impacted soil may be prohibited.

   b. Hydrotesting effluent.

   c. Construction dewatering effluent.

   You must submit a separate NOI form for each type of discharge at least 30 calendar days prior to the start of the discharge activity, except when applying for coverage for discharges of storm water associated with construction activity. For this type of discharge, the NOI must be submitted 30 calendar days before to the start of construction activities. The NOI forms may be picked up at our office or downloaded from our website at: http://www.hawaii.gov/health/environmental/water/cleanwater/forms/genl-index.html.

3. For types of wastewater not listed in Item No. 2 above or wastewater discharging into Class 1 or Class AA waters, you must obtain an NPDES individual permit. Class 1 waters include, but is not limited to, all State waters in natural reserves, preserves, sanctuaries, and refuges established by the Department of Land and Natural Resources under Hawaii Revised Statutes (HRS), Chapter 195, or similar reserves for the protection of aquatic life established under HRS, Chapter 195.

   An application for an NPDES individual permit must be submitted at least 180 calendar days before the commencement of the discharge. The NPDES application forms may be picked up at our office or downloaded from our website at http://www.hawaii.gov/health/environmental/water/cleanwater/forms/indiv-index.html.

4. The DEA should specify all types of pollutant discharges to State waters from the construction and operation of the Hilo Family Entertainment Center (including the baseyards and support facilities).

5. All State waters that may be impacted by the construction and operation of the Hilo Family Entertainment Center should be identified.

6. The DEA should also specify if any impacted State waters are listed in the Clean Water Act, Section 303(d) list of impaired water bodies in Chapter IV of the *2006 State of Hawaii Water Quality Monitoring and Assessment Report*.

   Any NPDES permit(s) for discharges into these water bodies will incorporate the requirement for the Permittee to develop and implement a facility/project-specific Waste Load Allocation (WLA) implementation and monitoring plan when a Total Maximum Daily Load (TMDL) which specifies WLAs applicable to the Permittee's project is approved by the U.S. Environmental Protection Agency (EPA). The Permittee shall incorporate and implement the facility/project-specific WLA implementation and monitoring plan as part of the project's Storm Water Pollution Control Plan or Site-Specific Best Management Practices (BMPs) Plan, as appropriate. The facility/project-specific WLA implementation and monitoring plan shall include Data Quality Objectives (DQO) and Quality Assurance (QA) and Quality Control (QC) methods. The purpose and goal of DQO process can be found at http://www.hanford.gov/dqo. Information on the DOH WLA Implementation and TMDLs are available on the DOH Environmental Planning Office website at http://hawaii.gov/health/environmental/env-planning/wqm/wqm.html (see *TMDL Technical Reports and Implementation Plans for approved TMDLs are available here for download in pdf format).*

7. In addition to construction BMPs, post-construction BMPs need to be implemented to minimize storm water runoff, to reduce the risk of erosion, and to prevent water quality degradation of State waters downstream of the project site. In the Draft EIS, please provide post-construction BMPs and a plan to ensure adequate long-term operation and maintenance of the post-construction BMPs.

8. Please note that all discharges related to the project construction or operation activities, whether or not NPDES permit coverage and/or Section 401 Water Quality Certification are required, must comply with the State's Water Quality Standards. Noncompliance with water quality requirements contained in HAR, Chapter 11-54, and/or permitting requirements, specified in HAR, Chapter 11-55, may be subject to penalties of $25,000 per day per violation.

If you have any questions, please visit our website at http://www.hawaii.gov/health/environmental/water/cleanwater/index.html, or contact the Engineering Section, CWB, at 586-4309.

Hazard Evaluation & Emergency Response Office

The DEA acknowledges, on page 18, the occurrence of Arsenic above EPA action levels, as noted in the quoted text below.

*For the Hilo Family Entertainment Center site, the ESA did not report any environmental liens or other activity or use limitations. However, Ho'oluana Place LLC acknowledges that there are known arsenic levels that exceed EPA non-carcinogenic preliminary remediation goals and that development of the site will require some level of remedial action. To date, the HEER Office had been preliminarily involved with soil investigations and Ho'oluana Place LLC anticipates additional interaction with HEER Office as permitting for the Hilo Family Entertainment Center movers forward. At this time, recommendations from HEER Office staff include the following:*

- *Additional testing to establish the vertical delineation for arsenic contamination.*
- *A possible need to sample groundwater beneath the site.*
- *Utilizing the HEER Office, "Soil Action Levels and Categories for Bioaccessible Arsenic Technical Report", dated August 7, 2006, which provides guidance on the assessment of arsenic-contaminated soils in Hawaii to guide the scope of remedial actions needed.*
- *HEER Office consultation with EPA in developing remedial actions needed, due to site's relative proximity to CERCLIS sites surrounding Waiakea Pond.*
- *Participation in a public process as described in the 1997 Department of Health Technical Guidance Manual.*

*As permitting for Hilo Family Entertainment Center moves forward, Ho'oluana Place LLC will coordinate with the HEER Office to further characterize the extent of the contamination, formulate a plan for remedial action and participate in a public process led by the DOH to ensure that sufficient information regarding the remedial actions is provided to the general public.*

The HEER Office concurs with the recommendations proscribed in the DEA

General

We strongly recommend that you review all of the Standard Comments on our website: www.hawaii.gov/health/environmental/env-planning/landuse/landuse.html. Any comments specifically applicable to this project should be adhered to.

If there are any questions about these comments please contact Jiacai Liu with the Environmental Planning Office at 586-4346.

Sincerely,

KELVIN H. SUNADA, MANAGER
Environmental Planning Office

c: EPO
CWB
HEER
EH-Hawaii

PBR HAWAII
& ASSOCIATES, INC.

PRINCIPALS

THOMAS S. WITTEN, ASLA
*President*

R. STAN DUNCAN, ASLA
*Executive Vice-President*

RUSSELL Y. J. CHUNG, FASLA
*Executive Vice-President*

VINCENT SHIGEKUNI
*Vice-President*

GRANT T. MURAKAMI, AICP
*Principal*

CHAIRMAN EMERITUS

W. FRANK BRANDT, FASLA
*Chairman Emiritus*

ASSOCIATES

TOM SCHNELL, AICP
*Senior Associate*

RAYMOND T. HIGA, ASLA
*Senior Associate*

KEVIN K. NISHIKAWA, ASLA
*Associate*

KIMI MIKAMI YUEN, LEED®AP
*Associate*

SCOTT ALIKA ABRIGO
*Associate*

SCOTT MURAKAMI, ASLA, LEED®AP
*Associate*

DACHENG DONG, LEED®AP
*Associate*

HONOLULU OFFICE
1001 Bishop Street
ASB Tower, Suite 650
Honolulu, Hawai'i 96813-3484
Tel: (808) 521-5631
Fax: (808) 523-1402
E-mail: sysadmin@pbrhawaii.com

HILO OFFICE
101 Aupuni Street
Hilo Lagoon Center, Suite 310
Hilo, Hawai'i 96720-4262
Tel: (808) 961-3333
Fax: (808) 961-4989

WAILUKU OFFICE
1787 Wili Pā Loop, Suite 4
Wailuku, Hawai'i 96793-1271
Tel: (808) 242-2878

January 16, 2009

Kelvin Sunada
State of Hawai'i
Department of Health
P.O. Box 3378
Honolulu, Hawai'i 96801-3378

**SUBJECT: HILO FAMILY ENTERTAINMENT CENTER – KUKUANAOA & MILILANI STREETS – TMK: (3)2-2-30:17 AND 19**

Dear Mr. Sunada,

Thank you for your letter dated November 20, 2008 regarding the Hilo Family Entertainment Center Draft Environmental Assessment (EA). As the planning consultant for the applicant, Ho'oluana Place, LLC, we are responding to your comments.

Clean Water Branch

We have reviewed the Clean Water Branch's standard comments and Hilo Family Entertainment Center will comply with all requirements of HAR, Chapters 11-54 and 11-55.

1. State Waters.

    a. The site is near Waiakea Pond, which meets the classifications of State in-land water body. Through appropriate soil remediation measures and stormwater management, degradation to State water is not expected with this development.
    b. No uses in State water are proposed.
    c. Basic water quality criteria are expected to be met with this proposal.

    No increases in pollutants attributable to the Hilo Family Entertainment Center are expected. This is due to the fact that soil remediation consistent with State of Hawai'i Department of Health, Hazard Evaluation and Emergency Response (HEER Office) requirements are proposed as discussed in Section 4.5 of the Draft and Final EA. Additionally, best management practices will be employed during construction and stormwater management techniques for water quality will be built into the site as described in Section 4.9.4 of the Draft and Final EA.

2. A National Pollutant Discharge Elimination System (NPDES) permit is required. The need for this permit is identified in Section 1.4 of the Draft and Final EA. Furthermore, a HEER approved Pesticide Soil management (PSM) Plan will be submitted and appropriate procedures as required by the HEER office will be followed as discussed in Section 4.5 of the Draft and Final EA.

3. Need for a an NPDES individual permit is not expected as discharges of wastewater other than those requiring a general permit, or discharges to Class 1 or Class AA waters are not expected. Should an individual permit be deemed necessary, the Clean Water Branch will be contacted, and an NPDES individual permit application will be submitted at least 180 calendar days before commencement of discharge.

4. No pollutant discharges to State waters are anticipated with the construction and operation of Hilo Family Entertainment Center.

5. The site is near Waiakea Pond, however, no impacts to the pond from the construction or operation of Hilo Family Entertainment Center are expected.

6. Although Waiakea Stream, which is on the 303(d) list and which feeds Waiakea Pond is near the site, no discharges to the stream are proposed.

7. Both construction and post-construction BMPs are proposed for the site. These stormwater quality management techniques are discussed in the Draft and Final EA in Section 4.9.4.

8. We acknowledge that all discharges related to the project construction or operation activities, whether or not NPDES permit coverage and/or permitting requirements specified in HAR, Chapter 11-55 may be subject to penalties.

Hazard Evaluation and Emergency Response Office

We have reviewed comments related to the Hazard Evaluation & Emergency Response office and acknowledge that the HEER Office concurs with the recommendations found in the Draft EA, Section 4.5.

Standard Comments

We have reviewed the standard comments and Hilo Family Entertainment Center will adhere to those applicable.

Thank you for reviewing the Draft EA. Your comments will be included in the Final EA.

Sincerely,

PBR HAWAII

Tom Schnell, AICP
Senior Associate

cc: Ho'oluana Place, LLC
Katherine Kealoha, Office of Environmental Quality Control

O:\Job26\2684.01 Hilo Family Entertainment Center\EA\DEA Comments an Responses\DEA Responses\DOH Response.doc

Harry Kim
*Mayor*

Lawrence K. Mahuna
*Police Chief*

Harry S. Kubojiri
*Deputy Police Chief*

County of Hawaii
**POLICE DEPARTMENT**
349 Kapiolani Street • Hilo, Hawai'i 96720-3998
(808) 935-3311 • Fax (808) 961-8865

RECEIVED
OCT 30 2008
PBR HAWAII

October 29, 2008

Mr. Tom Schnell, Consultant
PBR Hawaii
1001 Bishop Street
Honolulu, Hawaii 96813

Dear Mr. Schnell:

Subject: Pre-Assessment Consultation for Draft Environmental Assessment
Hilo Family Entertainment Center
TMK (3) 2-2-30:17 & 19
Kekuanaoa and Mililani Street, South Hilo, Hawaii Police Department

Staff, upon reviewing the provided documents and visiting the proposed site, comments as follows:

The proposed project could significantly impact traffic levels on both Kekuanaoa Street and Mililani Street. Any significant increases to present traffic levels on Kekuanaoa Street, Mililani Street and nearby Hualani Street and Piilani Street may negatively impact traffic safety, potentially leading to an increase in the incidence of traffic casualties on those streets. Of greatest concern is the impact increased traffic levels will have at the intersection of Kekuanaoa Street and Mililani Street, providing vehicular access to the Hilo International Airport. Present traffic levels in this area already make left turn movements to Kekuanaoa Street from Mililani Street difficult and hazardous.

It is our view that installation of a traffic control system or other traffic mitigation measure be considered for this intersection, prior to this project's approval.

Thank you for allowing us this opportunity to comment.

Sincerely,

DEREK D. PACHECO
ASSISTANT POLICE CHIEF
AREA I OPERATIONS BUREAU

# PBR HAWAII
& ASSOCIATES, INC.

PRINCIPALS

THOMAS S. WITTEN, ASLA
*President*

R. STAN DUNCAN, ASLA
*Executive Vice-President*

RUSSELL Y. J. CHUNG, FASLA
*Executive Vice-President*

VINCENT SHIGEKUNI
*Vice-President*

GRANT T. MURAKAMI, AICP
*Principal*

CHAIRMAN EMERITUS

W. FRANK BRANDT, FASLA
*Chairman Emiritus*

ASSOCIATES

TOM SCHNELL, AICP
*Senior Associate*

RAYMOND T. HIGA, ASLA
*Senior Associate*

KEVIN K. NISHIKAWA, ASLA
*Associate*

KIMI MIKAMI YUEN, LEED®AP
*Associate*

SCOTT ALIKA ABRIGO
*Associate*

SCOTT MURAKAMI, ASLA, LEED®AP
*Associate*

DACHENG DONG, LEED®AP
*Associate*

HONOLULU OFFICE
1001 Bishop Street
ASB Tower, Suite 650
Honolulu, Hawai'i 96813-3484
Tel: (808) 521-5631
Fax: (808) 523-1402
E-mail: sysadmin@pbrhawaii.com

HILO OFFICE
101 Aupuni Street
Hilo Lagoon Center, Suite 310
Hilo, Hawai'i 96720-4262
Tel: (808) 961-3333
Fax: (808) 961-4989

WAILUKU OFFICE
1787 Wili Pā Loop, Suite 4
Wailuku, Hawai'i 96793-1271
Tel: (808) 242-2878

January 16, 2009

Derek D. Pacheco, Assistant Police Chief
County of Hawai'i Police Department
349 Kapiolani Street
Hilo, HI 96720-3998

**SUBJECT: HILO FAMILY ENTERTAINMENT CENTER – KUKUANAOA & MILILANI STREETS – TMK: (3)2-2-30:17 AND 19**

Dear Assistant Chief Pacheco,

Thank you for your letter dated October 29, 2008 regarding the Hilo Family Entertainment Center Draft Environmental Assessment (EA). As the planning consultant for the applicant, Ho'oluana Place, LLC, we are responding to your comments.

Your comments expressed a concern with traffic levels on both Kekūanaō'a Street and Mililani Street and recommended a traffic signal or other traffic mitigation measure for this intersection. Ho'oluana Place LLC's traffic engineer reviewed the Police Department's suggestion and does not recommend a signal for the Kekūanaō'a Street and Mililani Street intersection due to the proximity of the existing signal one block away at the intersection of Kekūanaō'a Street and Manono Streets. During peak traffic hours, traffic backs up from the Kekūanaō'a/Manono intersection through the Kekūanaō'a/Mililani intersection. It is the opinion of the traffic engineer that installing a signal at Kekūanaō'a/Mililani would only exacerbate the congestion.

To mitigate traffic impacts, the traffic engineer recommends the construction of a left turn lane eastbound at the Kekūanaō'a/Mililani Street intersection (traffic eastbound on Kekūanaō'a turning left to northbound Mililani). Additionally, a second left turn lane is recommended for the southbound left turn lane at Kekūanaō'a and Mililiani Street (traffic southbound on Mililani turning left to eastbound Kekūanaō'a). The traffic engineer also recommends that if any driveways are located on Kekūanaō'a, that movements be limited to right-in and right-out only.

Thank you for reviewing the Draft EA. Your comments will be included in the Final EA.

Sincerely,

PBR HAWAII

Tom Schnell, AICP
Senior Associate

cc: Ho'oluana Place, LLC
Katherine Kealoha, Office of Environmental Quality Control

O:\Job26\2684.01 Hilo Family Entertainment Center\EA\DEA Comments and Responses\DEA Responses\HPD Response.doc

Harry Kim
*Mayor*

Darryl J. Oliveira
*Fire Chief*

Glen P.I. Honda
*Deputy Fire Chief*

# County of Hawai'i
## HAWAI'I FIRE DEPARTMENT
25 Aupuni Street • Suite 103 • Hilo, Hawai'i 96720
(808) 981-8394 • Fax (808) 981-2037

October 27, 2008

PBR Hawaii –Hilo Office
101 Aupuni Street
Hilo Lagoon Center, Suite 310
Hilo, Hawaii 96720-4262

**SUBJECT:** DRAFT ENVIRONMENTAL ASSESSMENT
PROJECT: HILO FAMILY ENTERTAINMENT CENTER, KEKUANAOA & MILILANI STREETS
TAX MAP KEY: (3) 2-2-30:17 AND 19

In regards to the above-mentioned draft environmental assessment, the following shall be in accordance:

Fire apparatus access roads shall be in accordance with UFC Section 10.207:

**"Fire Apparatus Access Roads**

"**Sec. 10.207.** (a) **General.** Fire apparatus access roads shall be provided and maintained in accordance with the provisions of this section.

"(b) **Where Required.** Fire apparatus access roads shall be required for every building hereafter constructed when any portion of an exterior wall of the first story is located more than 150 feet from fire department vehicle access as measured by an unobstructed route around the exterior of the building.

"**EXCEPTIONS:** 1. When buildings are completely protected with an approved automatic fire sprinkler system, the provisions of this section may be modified.

"2. When access roadways cannot be installed due to topography, waterways, nonnegotiable grades or other similar conditions, the chief may require additional fire protection as specified in Section 10.301 (b).

"3. When there are not more than two Group R, Division 3 or Group M Occupancies, the requirements of this section may be modified, provided, in the opinion of the chief, fire-fighting or rescue operations would not be impaired.

"More than one fire apparatus road may be required when it is determined by the chief that access by a single road may be impaired by vehicle congestion, condition of terrain, climatic conditions or other factors that could limit access.

"For high-piled combustible storage, see Section 81.109.

"(c) **Width.** The unobstructed width of a fire apparatus access road shall meet the requirements of the appropriate county jurisdiction.

"(d) **Vertical Clearance.** Fire apparatus access roads shall have an unobstructed vertical clearance of not less than 13 feet 6 inches.

"**EXCEPTION:** Upon approval vertical clearance may be reduced, provided such reduction does not impair access by fire apparatus and approved signs are installed and maintained indicating the established vertical clearance.

"(e) **Permissible Modifications.** Vertical clearances or widths required by this section may be increased when, in the opinion of the chief, vertical clearances or widths are not adequate to provide fire apparatus access.

"(f) **Surface.** Fire apparatus access roads shall be designed and maintained to support the imposed loads of fire apparatus and shall be provided with a surface so as to provide all-weather driving capabilities." (20 tons)

"(g) **Turning Radius.** The turning radius of a fire apparatus access road shall be as approved by the chief." (45 feet)

"(h) **Turnarounds.** All dead-end fire apparatus access roads in excess of 150 feet in length shall be provided with approved provisions for the turning around of fire apparatus.

"(i) **Bridges.** When a bridge is required to be used as access under this section, it shall be constructed and maintained in accordance with the applicable sections of the Building Code and using designed live loading sufficient to carry the imposed loads of fire apparatus.

"(j) **Grade.** The gradient for a fire apparatus access road shall not exceed the maximum approved by the chief." (15%)

"(k) **Obstruction.** The required width of any fire apparatus access road shall not be obstructed in any manner, including parking of vehicles. Minimum required widths and clearances established under this section shall be maintained at all times.

"(l) **Signs.** When required by the fire chief, approved signs or other approved notices shall be provided and maintained for fire apparatus access roads to identify such roads and prohibit the obstruction thereof or both."

Water supply shall be in accordance with UFC Section 10.301(c):

"(c) **Water Supply.** An approved water supply capable of supplying required fire flow for fire protection shall be provided to all premises upon which buildings or portions of buildings are hereafter constructed, in accordance with the respective county water requirements. There shall be provided, when required by the chief, on-site fire hydrants and mains capable of supplying the required fire flow.

"Water supply may consist of reservoirs, pressure tanks, elevated tanks, water mains or other fixed systems capable of providing the required fire flow.

"The location, number and type of fire hydrants connected to a water supply capable of delivering the required fire flow shall be protected as set forth by the respective county water requirements. All hydrants shall be accessible to the fire department apparatus by roadways meeting the requirements of Section 10.207.

DARRYL OLIVEIRA
Fire Chief

JCP:lpc

CC: Office of Environmental Quality Control, County of Hawaii Planning Dept.

# PBR HAWAII
& ASSOCIATES, INC.

January 16, 2009

PRINCIPALS

THOMAS S. WITTEN, ASLA
*President*

R. STAN DUNCAN, ASLA
*Executive Vice-President*

RUSSELL Y. J. CHUNG, FASLA
*Executive Vice-President*

VINCENT SHIGEKUNI
*Vice-President*

GRANT T. MURAKAMI, AICP
*Principal*

CHAIRMAN EMERITUS

W. FRANK BRANDT, FASLA
*Chairman Emiritus*

ASSOCIATES

TOM SCHNELL, AICP
*Senior Associate*

RAYMOND T. HIGA, ASLA
*Senior Associate*

KEVIN K. NISHIKAWA, ASLA
*Associate*

KIMI MIKAMI YUEN, LEED®AP
*Associate*

SCOTT ALIKA ABRIGO
*Associate*

SCOTT MURAKAMI, ASLA, LEED®AP
*Associate*

DACHENG DONG, LEED®AP
*Associate*

HONOLULU OFFICE
1001 Bishop Street
ASB Tower, Suite 650
Honolulu, Hawai'i 96813-3484
Tel: (808) 521-5631
Fax: (808) 523-1402
E-mail: sysadmin@pbrhawaii.com

HILO OFFICE
101 Aupuni Street
Hilo Lagoon Center, Suite 310
Hilo, Hawai'i 96720-4262
Tel: (808) 961-3333
Fax: (808) 961-4989

WAILUKU OFFICE
1787 Wili Pā Loop, Suite 4
Wailuku, Hawai'i 96793-1271
Tel: (808) 242-2878

Chief Darryl Oliveria
Hawai'i Fire Department
25 Aupuni Street, Suite 103
Hilo, HI 96720

**SUBJECT: HILO FAMILY ENTERTAINMENT CENTER – KUKUANAOA & MILILANI STREETS – TMK: (3)2-2-30:17 AND 19**

Dear Chief Oliveria,

Thank you for your letter dated October 27, 2008 regarding the Hilo Family Entertainment Draft Environmental Assessment (EA). As the planning consultant for the applicant, Ho'oluana Place, LLC, we are responding to your comments.

1. Fire apparatus access roads shall be designed and constructed in accordance with the Uniform Fire Code, Section 10.207, as amended.

2. Water supply shall be in accordance with Uniform Fire Code, Section 10.301(c), as amended.

Thank you for reviewing the Draft EA. Your comments will be included in the Final EA.

Sincerely,

PBR HAWAII

Tom Schnell, AICP
Senior Associate

cc: Ho'oluana Place, LLC
Katherine Kealoha, Office of Environmental Quality Control

O:\Job26\2684.01 Hilo Family Entertainment Center\EA\DEA Comments and Responses\DEA Responses\HFD Response.doc

# DEPARTMENT OF ENVIRONMENTAL MANAGEMENT
***WASTEWATER DIVISION***

COUNTY OF HAWAI'I – 108 RAILROAD AVENUE – HILO, HI 96720-4252
HILO (808) 961-8512 FAX (808) 961-8644


November 6, 2008

PBR Hawai'i & Associates
101 Aupuni Street
Hilo Lagoon Center, Suite 310
Hilo, Hawai'i 96720-4262

Subject: Hilo Family Entertainment Center
TMK: 2-2-030:017 & 019

The Wastewater Division is in receipt of the Draft Environmental Assessment dated October 2008. Based on the information provided, the developer will be developing the subject TMK in two phases. The first phase will include a bowling alley with a family recreation area, a restaurant and sports bar. The second phase will involve a 16,000 sq. ft. retail space.

The Division will be granting tentative approval for connection to the existing sewer laterals located on Mililani Street. Final approval will be contingent on the receipt and approval of plans and details for the project, as well as, the submittal of sewer studies and calculations as per the City and County of Honolulu Design Standards, Volume 1.

Should you have any questions please feel free to contact me at (808) 961-8028 (dbeck@co.hawaii.hi.us) or Toni Nakatani at (808) 961-8512 (anakatani@co.hawaii.hi.us).

Dora Beck

Dora Beck, P.E.
Wastewater Division Chief

cc: Lyle Hirota, Deputy Division Chief

# PBR HAWAII
& ASSOCIATES, INC.

PRINCIPALS

THOMAS S. WITTEN, ASLA
*President*

R. STAN DUNCAN, ASLA
*Executive Vice-President*

RUSSELL Y. J. CHUNG, FASLA
*Executive Vice-President*

VINCENT SHIGEKUNI
*Vice-President*

GRANT T. MURAKAMI, AICP
*Principal*

CHAIRMAN EMERITUS

W. FRANK BRANDT, FASLA
*Chairman Emiritus*

ASSOCIATES

TOM SCHNELL, AICP
*Senior Associate*

RAYMOND T. HIGA, ASLA
*Senior Associate*

KEVIN K. NISHIKAWA, ASLA
*Associate*

KIMI MIKAMI YUEN, LEED®AP
*Associate*

SCOTT ALIKA ABRIGO
*Associate*

SCOTT MURAKAMI, ASLA, LEED®AP
*Associate*

DACHENG DONG, LEED®AP
*Associate*

**HONOLULU OFFICE**
1001 Bishop Street
ASB Tower, Suite 650
Honolulu, Hawai'i 96813-3484
Tel: (808) 521-5631
Fax: (808) 523-1402
E-mail: sysadmin@pbrhawaii.com

**HILO OFFICE**
101 Aupuni Street
Hilo Lagoon Center, Suite 310
Hilo, Hawai'i 96720-4262
Tel: (808) 961-3333
Fax: (808) 961-4989

**WAILUKU OFFICE**
1787 Wili Pā Loop, Suite 4
Wailuku, Hawai'i 96793-1271
Tel: (808) 242-2878

January 16, 2009

Dora Beck, P.E., Wastewater Division Chief
Department of Environmental Management
108 Railroad Avenue
Hilo, HI 96720-4252

**SUBJECT: HILO FAMILY ENTERTAINMENT CENTER – KUKUANAOA & MILILANI STREETS – TMK: (3)2-2-30:17 AND 19**

Dear Ms. Beck,

Thank you for your letter dated November 6, 2008 regarding the Hilo Family Entertainment Center Draft Environmental Assessment (EA). As the planning consultant for the applicant, Ho'oluana Place, LLC, we acknowledge your tentative approval for connection to the existing sewer laterals located on Mililani Street. We also acknowledge that final approval will be contingent upon approval of plans and details for the project, as well as, the submittal of sewer studies and calculations pursuant to the City and County of Honolulu Design Standards, Volume 1.

Thank you for reviewing the Draft EA. Your comments will be included in the Final EA.

Sincerely,

PBR HAWAII

Tom Schnell, AICP
Senior Associate

cc: Ho'oluana Place, LLC
Katherine Kealoha, Office of Environmental Quality Control

O:\Job26\2684.01 Hilo Family Entertainment Center\EA\DEA Comments and Responses\DEA Responses\DEM Response.doc

DEPARTMENT OF WATER SUPPLY • COUNTY OF HAWAI'I
345 KEKŪANAŌ'A STREET, SUITE 20 • HILO, HAWAI'I 96720
TELEPHONE (808) 961-8050 • FAX (808) 961-8657

December 1, 2008

Mr. Tom Schnell
PBR Hawaii
ASB Tower, Suite 650
1001 Bishop Street
Honolulu, HI 96813

**DRAFT ENVIRONMENTAL ASSESSMENT**
**HILO FAMILY ENTERTAINMENT CENTER**
**HOOLUANA PLACE, LLC**
**TAX MAP KEY 2-2-030:017 AND 019**

We have reviewed the subject Draft Environmental Assessment and have the following comments.

1. Our comments from our April 8, 2008, Pre-Environmental Assessment consultation letter to your office still stand.

2. Please be informed that there is an existing service lateral fronting Parcel 19 that is capable of accommodating a 2-inch meter. This service has eight (8) units of water assigned to it, at 400 gallons per day (GPD), per unit, for a total credit of 3,200 GPD.

3. We have reviewed the estimated average daily water usage calculations, provided by Witcher Engineer LLP, and find them acceptable. Based on the calculations provided, the proposed Hilo Family Entertainment Center will require 35 units of water, at 400 gallons per day, per unit, and the Department can confirm that water can be made available for that demand.

4. The Department requests remittance of a water commitment deposit in the amount of $3,900.00 for 26 additional units of water for the proposed project, as shown below:

| WATER COMMITMENT DEPOSIT: | |
|---|---|
| 8 units of water for existing service to Parcel 19 (see Item 2 above) | $0.00 |
| 1 unit of water for 1st service to Parcel 17 | $0.00 |
| 26 additional units of water @ $150.00 per unit | $3,900.00 |

Once the water commitment deposit is received, the Department will effect a water commitment, in writing, indicating specific dates, facilities charges due, and water system improvements required for final approval. Please note that until a water commitment is effected, water availability is subject to change without notice.

5. Plans, prepared by a professional engineer licensed in the State of Hawai'i, must be submitted, showing the size and location of the water service connection(s) and improvements required for fire protection.



The Department of Water Supply is an Equal Opportunity provider and employer. To file a complaint of discrimination, write: USDA, Director, Office of Civil Rights, Room 326-W, Whitten Building, 14th and Independence Avenue, SW, Washington DC 20250-9410. Or call (202) 720-5964 (voice and TDD)

Should there be any questions, please contact Mr. Finn McCall of our Water Resources and Planning Branch at 961-8070, extension 255.

Sincerely yours,

Milton D. Pavao, P.E.
Manager

FM:dfg

# PBR HAWAII
& ASSOCIATES, INC.

PRINCIPALS

THOMAS S. WITTEN, ASLA
*President*

R. STAN DUNCAN, ASLA
*Executive Vice-President*

RUSSELL Y. J. CHUNG, FASLA
*Executive Vice-President*

VINCENT SHIGEKUNI
*Vice-President*

GRANT T. MURAKAMI, AICP
*Principal*

CHAIRMAN EMERITUS

W. FRANK BRANDT, FASLA
*Chairman Emiritus*

ASSOCIATES

TOM SCHNELL, AICP
*Senior Associate*

RAYMOND T. HIGA, ASLA
*Senior Associate*

KEVIN K. NISHIKAWA, ASLA
*Associate*

KIMI MIKAMI YUEN, LEED®AP
*Associate*

SCOTT ALIKA ABRIGO
*Associate*

SCOTT MURAKAMI, ASLA, LEED®AP
*Associate*

DACHENG DONG, LEED®AP
*Associate*

**HONOLULU OFFICE**
1001 Bishop Street
ASB Tower, Suite 650
Honolulu, Hawai'i 96813-3484
Tel: (808) 521-5631
Fax: (808) 523-1402
E-mail: sysadmin@pbrhawaii.com

**HILO OFFICE**
101 Aupuni Street
Hilo Lagoon Center, Suite 310
Hilo, Hawai'i 96720-4262
Tel: (808) 961-3333
Fax: (808) 961-4989

**WAILUKU OFFICE**
1787 Wili Pā Loop, Suite 4
Wailuku, Hawai'i 96793-1271
Tel: (808) 242-2878

January 16, 2009

Milton D. Pavao, P.E.
Department of Water Supply
345 Kekūanaō'a Street, Suite 20
Hilo, HI 96720

**SUBJECT: HILO FAMILY ENTERTAINMENT CENTER – KUKUANAOA & MILILANI STREETS – TMK: (3)2-2-30:17 AND 19**

Dear Mr. Pavao,

Thank you for your letter dated December 1, 2008 regarding the Hilo Family Entertainment Center Draft Environmental Assessment (EA). As the planning consultant for the applicant, Ho'oluana Place, LLC, we are responding to your comments.

We acknowledge that the comments provided in your April 8, 2008 letter and pre-environmental assessment consultation letter are still applicable.

Your comments verify that the existing service lateral fronting Parcel 19 is capable of accommodating a 2-inch meter and that the service has eight units of water assigned to it for a total credit of 3,200 GPD. Your comments also confirmed review of the estimated average daily water usage calculations provided for the Draft EA and confirmed that water can be made available for that demand.

We acknowledge the water commitment deposit in the amount of $3,900.00 and recognize that until this deposit is received that water availability is subject to change without notice. At this time, the developer would like to wait until SMA Use Permit is approved before committing the deposit. We also acknowledge the requirement for specific plans for the water connection and improvements required for fire protection.

Thank you for reviewing the Draft EA. Your comments will be included in the Final EA.

Sincerely,

PBR HAWAII

Tom Schnell, AICP
Senior Associate

cc: Ho'oluana Place, LLC
Katherine Kealoha, Office of Environmental Quality Control

O:\Job26\2684.01 Hilo Family Entertainment Center\EA\DEA Comments and Responses\DEA Responses\DWS Response.doc

**Hawaii Electric Light Company, Inc.** • PO Box 1027 • Hilo, HI 96721-1027

November 17, 2008

RECEIVED
DEC 0 3 2008
PBR HAWAII

PBR Hawaii & Associates, Inc.
101 Aupuni Street
Hilo Lagoon Center, Suite 310
Hilo, Hawaii 96720-4262
Phone: 808-961-3333
Fax: 808-961-4989

Gentlemen:

Subject: Draft Environmental Assessment: Hilo Family Entertainment Center
TMK: (3) 2-2-30:17 & 19
Waiakea, District of South Hilo, Hawaii

Thank you for the opportunity to review the Subject Project located in South Hilo. HELCO will be able to provide electrical service to the proposed development as described subject to detailed analysis to be performed after receipt of your consultant's detailed design drawings and estimated demand.

1. Generation Capacity - HELCO's current system peak load is 203,300 kW and our total generation system capability is 269,850 kW. Our reserve margin is 33 percent and has adequate generation to serve the above.

2. Electrical Substation – The area is currently served by our existing 7.5MVA Kanoelehua electrical switching station and a 13,800 volt distribution overhead system along Kekuanaoa Avenue. Based on an assumption of 20.0W/sq-ft for the family entertainment center and 13.0 W/sq-ft for the restaurant space and 10 W/sq-ft for the retail space, the capacity of our existing switching station is adequate to serve the estimated load of 1,095kW.

3. Off-Site Electrical Distribution System – The existing off-site 13,800 volt distribution system along Kekuanaoa Avenue and Mililani Street is adequate to serve the proposed development.

4. On-Site Electrical System – On-site distribution line extensions and easements are required on the developer's property to serve the anticipated load.

After the development's detailed electrical load calculations and civil plans are submitted, HELCO will design the electrical system and prepare a firm cost to provide electrical power to the development.

HELCO recommends energy efficient and conservation measures to reduce the maximum electrical demand and energy consumption. The developer may call HELCO's Energy Services Manager, Curtis Beck, at 969-0134 for questions or details on available programs.

It is encouraged that the developer's electrical consultants open a service request with HELCO's Engineering Department as soon as practicable to ensure timely electrical facility installation.

Should you have any questions, please contact Hal Kamigaki at (808) 969-0322.

Sincerely,

Thomas W. Cummins

Thomas W. Cummins, L.P.L.S.
Engineering Department, Manager

TC:HKK:gk

cc: S. Oshiro

# PBR HAWAII
& ASSOCIATES, INC.

PRINCIPALS

THOMAS S. WITTEN, ASLA
*President*

R. STAN DUNCAN, ASLA
*Executive Vice-President*

RUSSELL Y. J. CHUNG, FASLA
*Executive Vice-President*

VINCENT SHIGEKUNI
*Vice-President*

GRANT T. MURAKAMI, AICP
*Principal*

CHAIRMAN EMERITUS

W. FRANK BRANDT, FASLA
*Chairman Emiritus*

ASSOCIATES

TOM SCHNELL, AICP
*Senior Associate*

RAYMOND T. HIGA, ASLA
*Senior Associate*

KEVIN K. NISHIKAWA, ASLA
*Associate*

KIMI MIKAMI YUEN, LEED®AP
*Associate*

SCOTT ALIKA ABRIGO
*Associate*

SCOTT MURAKAMI, ASLA, LEED®AP
*Associate*

DACHENG DONG, LEED®AP
*Associate*

HONOLULU OFFICE
1001 Bishop Street
ASB Tower, Suite 650
Honolulu, Hawai'i 96813-3484
Tel: (808) 521-5631
Fax: (808) 523-1402
E-mail: sysadmin@pbrhawaii.com

HILO OFFICE
101 Aupuni Street
Hilo Lagoon Center, Suite 310
Hilo, Hawai'i 96720-4262
Tel: (808) 961-3333
Fax: (808) 961-4989

WAILUKU OFFICE
1787 Wili Pā Loop, Suite 4
Wailuku, Hawai'i 96793-1271
Tel: (808) 242-2878

January 16, 2009

Thomas W. Cummins, L.P.L.S.
Hawaii Electric Light Company
PO Box 1027
Hilo, HI 96721-1027

**SUBJECT: HILO FAMILY ENTERTAINMENT CENTER – KUKUANAOA & MILILANI STREETS – TMK: (3)2-2-30:17 AND 19**

Dear Mr. Cummins,

Thank you for your letter dated November 17, 2008 regarding the Hilo Family Entertainment Center Draft Environmental Assessment (EA). As the planning consultant for the applicant, Ho'oluana Place, LLC, we acknowledge that your facilities have adequate generation capacity in the system and in the electrical substation and distribution systems. We also acknowledge that on-site distribution line extensions and easements are required on the developer's property to serve the anticipated load.

Thank you for reviewing the Draft EA. Your comments will be included in the Final EA.

Sincerely,

PBR HAWAII

Tom Schnell, AICP
Senior Associate

cc: Ho'oluana Place, LLC
Katherine Kealoha, Office of Environmental Quality Control

O:\Job26\2684.01 Hilo Family Entertainment Center\EA\DEA Comments and Responses\DEA Responses\HELCO Response.doc

# Appendix C

Civil Engineering Report

# HILO FAMILY ENTERTAINMENT CENTER
# HILO, HAWAII
# TMK (3)2-2-030:017 AND 019

## I. INTRODUCTION AND PURPOSE

The purpose of this report is to present information obtained from various sources in a comprehensive manner to be used in support of the preparation of an Environmental Assessment and a Special Management Area permit. This information will also be valuable in the design of the proposed facility.

## II. AREA AND SITE

The location of the project is in an area of residential, light industrial, neighborhood commercial and offices. The nearby offices consist of a credit union adjacent to the site, the Hawaii County Department of Water Supply (DWS) and the Court.

This site itself is in a lower/depressed area and is overgrown with brush. There are two parcels (TMK (3)2-2-030:017 and (3)2-2-030:019) in the site with a total of 6.24 acres.

Access to the site can be made off Kekuanaoa Street, Mililani Street, the extension of Hualani Street and an easement on the west connecting the project to the easement that serves the Court and DWS. This easement is adjacent to the northerly boundary of the credit union. See Figures 1 and 2.

Kekuanaoa Street has a 60-foot right-of-way along the south side of the property. The pavement width varies with a minimum width of 20-feet.

Mililani Street has a 40-foot right-of-way with 20 feet of pavement with grass shoulders and lies along the easterly boundary of the site. Access to and from the project would be primarily along this street.

Hualani Street deadends at the northeast corner of the site. A right-of-way for the extension of Hualani Street appears to exist along the north boundary of the site. This could be used as access to the project.

## III. UTILITIES

The project site is served by the necessary utilities: water, sewer, electricity, telephone and cable TV. Each of these will be discussed. There does not appear to be any natural gas in the area, so this utility will not be discussed.





### A. *Water*

There is adequate water available to serve the project with normal requirements, such as restrooms, restaurants, irrigation of landscaping, etc. However, upgrades will be necessary for fire flow requirements.

There are six-inch diameter waterlines in both Kekuanaoa Street and Mililani Street. However, to provide the necessary fire flow to the site, it will be necessary to upgrade the six-inch line in Kekuanaoa Street to an eight-inch line for approximately 300 feet to a location adjacent to the west boundary of the site. From this point a twelve-inch line will be necessary to supply the site through a detector check meter and an onsite twelve-inch line to service the site. This twelve-inch line would be served from the eight-inch line to the west and the six-inch line from the east. This was the conclusion from a meeting with the Department of Water Supply on February 27, 2008.

On April 8, 2008, a letter was sent to PBR which, in essence changes the above requirements. The Department of Water Supply will now allow a connection to be made on the six-inch waterline in Kekuanaoa Street and the six-inch waterline in Mililani Street. These two connections can be used to connect at each end of a line through the project. This line will be a twelve-inch line with a detector check meter at each end. Also, at each end an eight-inch line will connect to the detector check and a twelve-inch line will provide the necessary 2,000 gallons per minute required for fire flow. See Exhibit 1.

***Water Calculations***

| | |
|---|---|
| Retail 16,038 $ft^2$ at 0.1 gal/day/$ft^2$, therefore | 1,604 gal |
| Bowling Alley 37,500 $ft^2$ at 0.1 gal/day/$ft^2$, therefore, | 3,750 gal |
| Restaurants (2) total 192 seats | |
| 192 at 30 gal/day/seat | 6,144 gal |
| Sports Bar total 100 seats | |
| 100 at 30 gal/day/seat | 3,000 gal |
| Landscaping one-half acre | |
| ½ acre at 1600 gal/day/acre | 800 gal |
| **Total Water Demand** | **13,694 gal/day** |

Therefore 35 water units are needed with a 2" meter

### B. *Sewer System*

There is an 8-inch sewerline running south in Mililani Street. Both parcels have six-inch sewer laterals. The lateral serving Parcel 17 has an invert elevation of 7.49 feet with a rim of approximately 14.0 feet. The lateral serving Parcel 19 has an invert

This soil series falls into Hydrologic Group D and Erosion Resistance Group I.

## VI. FLOODING AND FIRM

The development site is located in Zone "X" (area outside the 500-year flood plain) as defined by the FIRM. However, the development is in close proximity, approximately 600 feet, to Palai Stream. There is a ridge in between the project and stream that is higher than the approximately 33-foot elevation of the project.

During periods of heavy participation, ponding has been observed to occur in this area. Drainage design will need to take this into consideration since the site, in all likelihood, does not generate all of the ponding. The building pad elevations should be set high enough to insure that this ponding, when it does occur, does not adversely affect the project. Offsite drainage will be addressed during the design phase as well as quantities of fill which may be necessary.

## VII. DRAINAGE

The site consists of a total of 6.24 acres. It is assumed that drywells will be used for insuring that there is no runoff from a ten-year storm. These drywells will be located so that each will take an equal quantity of runoff. The following are runoff calculations for the subject property. See Exhibit 3.

### *Runoff Calculations*

Rainfall 10-year storm equals 5 inches
Time of concentration, $t_c$, assumes 6 minutes
Assumed runoff coefficient, C, is 0.80
Total area is 6.24 acres
Intensity, $i$, is 12.5
Quantity, Q, = (12.5)(6.24)(0.80) = 62.40 cfs
6 cfs per drywell
Therefore 10.4 or 11 drywells will be required.

In order to mitigate any problems drywells may cause to the ecosystem, we suggest that, instead of placing drywells in the traditional locations such as in the travel ways or at the ends of drainage swales in the pavement, place them in the landscaping with some of the runoff watering the landscape. The landscaping could be used as a filter prior to the runoff flowing to the drywells. In addition, rather than using curbs throughout the parking lot, use wheel stops so that runoff will flow into the landscaping.





Oftentimes, islands of landscaping in parking lots are mounded and are higher than the surrounding pavement. Instead, these islands could be lowered, and the pavement designed to direct runoff to them.

In order to use the landscaping as part of the drainage system, it may be necessary to use certain soil amendments or soil types. Also, specific types of plants may be involved.

# Appendix D

Flora & Fauna Study (Rana Productions)

# A Survey of Botanical, Avian and Terrestrial Mammalian Species for the Proposed Hilo Family Entertainment Center, South Hilo District, Island of Hawai'i.

Prepared by:

Reginald E. David
Rana Productions, Ltd.
P.O. Box 1371
Kailua-Kona, Hawai'i 96745

&

Ron Terry & Layne Yoshida
Geometrician Associates, LLC
P.O. Box 396
Hilo Hawai'i 96721

Prepared for:

Ho'oluana Place LLC
P.O Box 5308
Hilo, Hawai'i 96720

March 29, 2008



*Table of Contents*

*Table of Contents* ..... 2
*Introduction* ..... 3
*General Site Description* ..... 3
*Botanical Survey Methods* ..... 6
*Botanical Survey Results* ..... 6
*Mammalian Survey Methods* ..... 9
*Mammalian Survey Results* ..... 9
*Avian Survey Methods* ..... 9
*Avian Survey Results* ..... 10
*Discussion* ..... 11
- *Botanical Resources* ..... 11
- *Mammalian Resources* ..... 12
- *Avian Resources* ..... 12

*Potential Impacts to Protected Species* ..... 14
- *Botanical Resources* ..... 14
- *Hawaiian Hoary Bat* ..... 14
- *Hawaiian Petrel and Newell's Shearwater* ..... 14

*Conclusions* ..... 14
*Recommendations* ..... 15
*Glossary* ..... 16
*Literature Cited* ..... 17

*Figures & Tables*

Figure 1. Hilo Family Entertainment Site ..... 4
Figure 2. Northern end of site looking south from Hualani Street ..... 5
Figure 3. Southern end of Site looking north from the intersection of Kekaūanō'a Avenue and Mililani Street ..... 5

Table 1. Plant Species Recorded, Hilo Family Entertainment Center Site ..... 6
Table 1. Avian Species Detected, Hilo Family Entertainment Center Site ..... 10

*Introduction*

Hooluana Place LLC, is proposing to develop an approximately 6.23-acre parcel of land, identified as TMK's: (3) 2-2-30:17 and 19, into a mixed commercial/retail development, including a family entertainment center, steak house restaurant and a sports bar (Figure 1). The property is located adjacent to the Waiākea Villas, and is bordered by Hualani Street to the north, Kekaūanō'a Avenue to the south, and Mililani Street to the east (Figure 1).

This report summarizes the findings of the botanical, ornithological and mammalian surveys conducted within the proposed project site. Fieldwork was conducted in February and March 2008. The primary purpose of the surveys was to determine if there were any botanical, avian or mammalian species currently listed as endangered, threatened, or proposed for listing under either the federal or the State of Hawai'i's endangered species programs on, or within in the immediate vicinity of the proposed development site. Secondary goals were to describe the general biological setting and provide information on the likely impacts of developing this site on native botanical, avian and mammalian resources present within the general Hilo area.

Federal and State of Hawai'i listed species status follows species identified in the following referenced documents (Division of Land and Natural Resources (DLNR) 1998, Federal Register 2005, U. S. Fish & Wildlife Service (USFWS) 2005, 2008). Avian phylogenetic order and nomenclature follows *The American Ornithologists' Union Check-list of North American Birds 7th Edition* (American Ornithologists' Union 1998), and the 42nd through the 48th supplements to *Check-list of North American Birds* (American Ornithologists' Union 2000; Banks et al. 2002, 2003, 2004, 2005, 2006, 2007). Mammal scientific names follow *Mammals in Hawaii* (Tomich 1986). Plant names follow *Manual of the Flowering Plants of Hawai'i* (Wagner et al. 1990, 1999) for native and naturalized flowering plants. Place names follow *Place Names of Hawaii* (Pukui et al. 1976).

Hawaiian and scientific names are italicized in the text. A glossary of technical terms and acronyms used in the document, which may be unfamiliar to the reader, are included at the end of the narrative text on page 16.

*General Site Description*

The project site is located in a mixed residential light business area, as previously mentioned it is bordered by Hualani Street to the north, Kekaūanō'a Avenue to the south, and Mililani Street to the east. There is unimproved land to the north of the site, a residential area to the immediate east and a light industrial development to the south. The site itself has a rather rundown tennis facility on the northern third of the site, which in turn is separated from Hualani Street by a mowed lawn, which frames the entrance to the Waiakea Villas (Figure 2). The southern two-thirds of the site is currently undeveloped. It appears as if the site has been cleared numerous times within recent times (Figure 3).

The current vegetation of the property is a patchy mixture of secondary forest, shrubland and grassland that is almost completely dominated by fast-growing alien weedy species.



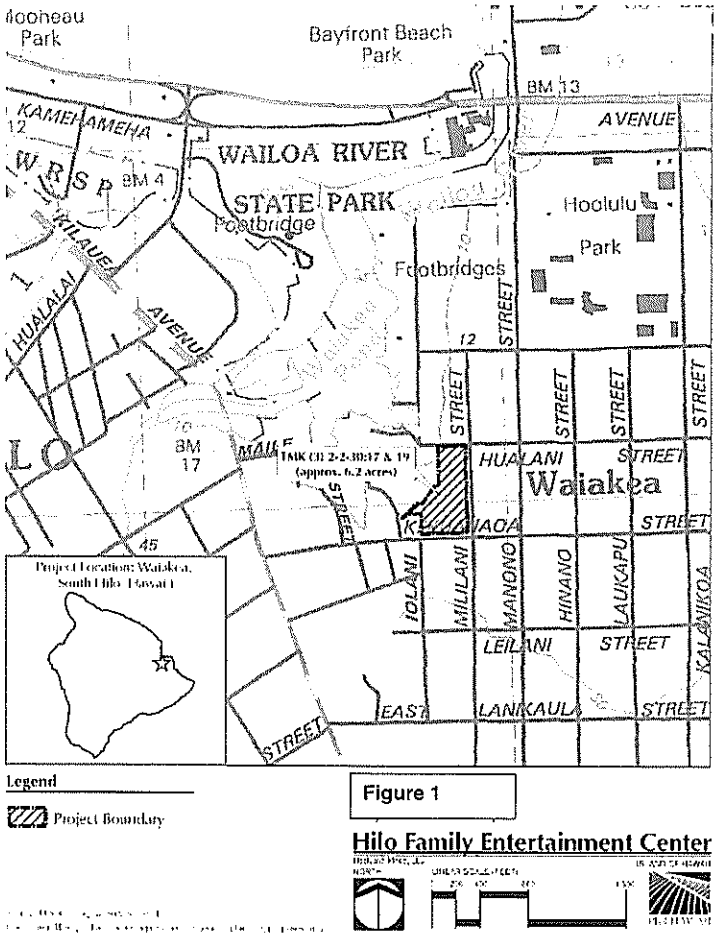


Figure 1

Hilo Family Entertainment Center

Figure 2 – Northern end of site looking south from Hualani Street

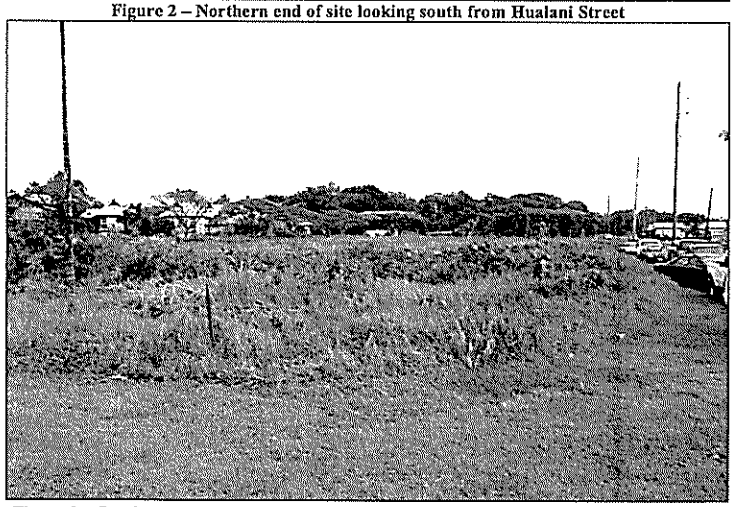

Figure 3 – Southern end of Site looking north from the intersection of Kekaūanō'a Avenue and Mililani Street



*Botanical Survey Methods*

The objectives of the botanical survey were to: 1) describe the vegetation; 2) list all species encountered; and 3) identify threatened or endangered plant species. Ron Terry and Layne Yoshida surveyed the area on parts of two days in February 2008.

The botanists walked the property in wandering transects. Although vegetation was dense in areas, the small size of the property and numerous orientation features allowed the area to be easily covered and fully surveyed. Species were identified in the field and, as necessary, collected and later identified in the laboratory. Special attention was given to the possible presence of any federally (USFWS 2008) listed threatened or endangered plant species.

*Botanical Survey Results*

The botanists recorded a total of 100 separate species of plants on the property (Table 1). Of these only four, *'Uhaloa* (*Waltheria indica*), *Pakahakaha* fern (*Lepisorus thunbergianus*), the sedge (*Fimbristylis dichotoma*) and Itchy crabgrass (*Digitaria setigera*), are considered to be native species, the first three are indigenous, the fourth may-or-may not be, depending on which reference one chooses to consult. No endemic species, nor any species currently listed as threatened, endangered or proposed for listing under either the federal or State of Hawaii endangered species statutes were recorded on the site.

**Table 1- Plant Species Recorded, Hilo Entertainment Center Site**

| *Scientific Name* | *Family* | *Common Name* | *Status* |
|---|---|---|---|
| *Ageratum conyzoides* | Asteraceae | Ageratum | A |
| *Aleurites moluccana* | Euphorbiaceae | Kukui | A |
| *Allamanda cathartica* | Apocynaceae | Allamanda | A |
| *Alpinia purpurata* | Zingiberaceae | Red ginger | A |
| *Archontophoenix alexandrae* | Arecaceae | Alexandra palm | A |
| *Axonopus compressus* | Poaceae | Wide-leafed carpet grass | A |
| *Bambusa vulgaris* | Poaceae | Green-stripe bamboo | A |
| *Bidens alba* | Asteraceae | Beggar's tick | A |
| *Bracharia mutica* | Poaceae | California grass | A |
| *Buddleia asiatica* | Loganiaceae | Buddleia | A |
| *Calliandra haemotocephala* | Fabaceae | Lehua haole | A |
| *Canna indica* | Cannaceae | Indian shot | A |
| *Carica papaya* | Caricaceae | Papaya | A |
| *Cassia sp.* | Fabaceae | Shower tree | A |
| *Castilleja arvensis* | Scrophulariaceae | Indian paintbrush | A |
| *Chamaecrista nictitans* | Fabaceae | Partridge pea | A |

Table 1 Continued,

| *Scientific Name* | *Family* | *Common Name* | *Status* |
|---|---|---|---|
| *Chrysalidocarpus lutescens* | Arecaeae | (Palm) | A |
| *Citharexylum caudatum* | Verbenaceae | Fiddlewood | A |
| *Clusia rosea* | Clusiaceae | Autograph tree | A |
| *Coix lachryma-jobi* | Poaceae | Job's tears | A |
| *Commelina diffusa* | Commelinaceae | Honohono | A |
| *Cordyline fruticosa* | Agavaceae | Ti | A |
| *Crotalaria pallida* | Fabaceae | Smooth rattle pod | A |
| *Desmodium incanum* | Fabaceae | Spanish clover | A |
| *Desmodium tortuosum* | Fabaceae | Florida beggarweed | A |
| *Desmodium triflorum* | Fabaceae | Desmodium | A |
| *Dieffenbachia sp.* | Araceae | Dumb cane | A |
| *Digitaria setigera* | Poaceae | Itchy crabgrass | I? |
| *Dissotis rotundifolia* | Melastomaceae | Dissotis | A |
| *Dombeya sp.* | Sterculiaceae | Dombeya | A |
| *Dracaena fragrans* | Agavaceae | Money tree | A |
| *Drymaria cordata* | Caryophyllaceae | Pipili | A |
| *Eleusine indica* | Poaceae | Goose grass | A |
| *Emilia fosbergii* | Asteraceae | Flora's paintbrush | A |
| *Emelia sonchifolia* | Asteraceae | Pualele | A |
| *Epipremnun pinnatum* | Araceae | Pothos vine | A |
| *Eragrostis sp.* | Poaceae | Eragrostis | A |
| *Eucalyptus sp.* | Myrtaceae | Eucalyptus | A |
| *Ficus microcarpa* | Moraceae | Chinese banyan | A |
| *Fimbristylis dichotoma* | Cyperaceae | Fimbristylis | I |
| *Hedychium flavescens* | Zingiberaceae | Yellow ginger | A |
| *Hedyotis biflora* | Rubiaceae | None | A |
| *Heliconia sp.* | Heliconiaceae | Heliconia | A |
| *Hyptis pectinata* | Lamiaceae | Comb hyptis | A |
| *Impatiens spp.* | Balsaminaceae | Impatiens | A |
| *Ipomea cairica* | Convolvulaceae | Ivy-leaved morning glory | A |
| *Ipomoea triloba* | Convolvulaceae | Little bell | A |
| *Ipomoea sp.* | Convolvulaceae | Unknown | A |
| *Koelreuteria formosana* | Sapindaceae | Golden rain tee | A |
| *Kyllinga brevifolia* | Cyperaceae | Sedge | A |
| *Lantana camara* | Verbenaceae | Lantana | A |
| *Lepisorus thunbergianus* | Polypodiaceae | Pakahakaha | I |
| *Leucaena leucocephala* | Fabaceae | Haole koa | A |



Table 1 Continued,

| *Scientific Name* | *Family* | *Common Name* | *Status* |
|---|---|---|---|
| *Lindernia crustacea* | Scrophulariaceae | None | A |
| *Macaranga mappa* | Euphorbiaceae | Macaranga | A |
| *Manihot esculenta* | Euphorbiaceae | Manioc | A |
| *Melochia umbellata* | Sterculiaceae | Melochia | A |
| *Melinus minutiflora* | Poaceae | Molasses grass | A |
| *Merremia tuberosa* | Convolvulaceae | Wood rose | A |
| *Mimosa pudica* | Fabaceae | Sensitive plant | A |
| *Momordica charantia* | Cucurbitaceae | Bitter gourd | A |
| *Monstera sp.* | Araceae | Monstera | A |
| *Nephrolepis multiflora* | Nephrolepidaceae | Sword fern | A |
| *Oplismenus hirtellus* | Poaceae | Basket grass | A |
| *Oxalis corniculata* | Oxalidaceae | Creeping wood sorrel | A |
| *Paederia scandens* | Rubiaceae | Maile pilau | A |
| *Panicum maximum* | Poaceae | Guinea grass | A |
| *Panicum repens* | Poaceae | Wainaku grass | A |
| *Paspalum conjugatum* | Poaceae | Hilo grass | A |
| *Paspalum urvillei* | Poaceae | Vasey grass | A |
| *Passiflora foetida* | Passifloraceae | Love-in-a-mist | A |
| *Persea americana* | Lauraceae | Avocado | A |
| *Philodendron sp.* | Araceae | Philodendron | A |
| *Phyllanthus debilis* | Euphorbiaceae | Niruri | A |
| *Pityrogramma calomelanos* | Pterdidaceae | Silver fern | A |
| *Pluchea symphytifolia* | Asteraceae | Sourbush | A |
| *Polygala paniculata* | Polygalaceae | Milkwort | A |
| *Pseuderanthemum sp?* | Acanthaceae | Unknown | A |
| *Psidium guajava* | Myrtaceae | Common guava | A |
| *Pycreus polystachyos* | Cyperaceae | Sedge | A |
| *Ricinus communis* | Euphorbiaceae | Castor bean | A |
| *Rhynchelytrum repens* | Poaceae | Natal red top | A |
| *Sacciolepis indica* | Poaceae | Glenwood grass | A |
| *Samanea saman* | Fabaceae | Monkeypod | A |
| *Schizachyrium condensatum* | Poaceae | Beardgrass | A |
| *Senna alata* | Fabaceae | Golden candle | A |
| *Setaria palmifolia* | Poaceae | Palmgrass | A |
| *Sida spinosa* | Malvaceae | Prickly sida | A |
| *Solenostemon sp.* | Lamiaceae | Coleus | A |
| *Spathodea campanulata* | Bignoniaceae | African tulip | A |

Table 1 Continued,

| *Scientific Name* | *Family* | *Common Name* | *Status* |
|---|---|---|---|
| *Spermacoce assurgens* | Rubiaceae | Buttonweed | A |
| *Sporobolus africanus* | Poaceae | Smutgrass | A |
| *Synedrella nodiflora* | Asteraceae | Synedrella | A |
| *Syzygium cumini* | Myrtaceae | Java plum | A |
| *Terminalia catappa* | Combretaceae | False kamani | A |
| *Thunbergia fragrans* | Acanthaceae | White thunbergia | A |
| *Trema orientalis* | Ulmaceae | Gunpowder tree | A |
| *Waltheria indica* | Sterculiaceae | Uhaloa | I |
| *Wedelia trilobata* | Asteraceae | Wedelia | A |
| *Youngia japonica* | Asteraceae | Oriental hawksbeard | A |

A = alien, E = endemic, I = indigenous,

### *Mammalian Survey Methods*

With the exception of the endangered Hawaiian hoary bat (*Lasiurus cinereus semotus*), or *'ōpe'ape'a* as it is known locally, all terrestrial mammals currently found on the Island of Hawai'i are alien species. Most are ubiquitous. The survey of non-volant mammals was limited to visual and auditory detection, coupled with visual observation of scat, tracks, and other animal sign. A running tally was kept of all vertebrate species observed and heard within the project area. Visual and electronic scans, using a Broadband AnaBat II® ultrasonic bat detector, were made for bats during crepuscular periods on the evening of March 29, 2008.

### *Mammalian Survey Results*

We detected two mammalian species during the course of this survey. Three small Indian Mongooses (*Herpestes a. auropunctatus*), and one domestic dog (*Canis f. familiaris*) were seen on the site. Numerous dogs were also heard barking from within the residential area adjacent to the site. Both mammal species detected are considered to be alien to the Hawaiian Islands. The endangered Hawaiian hoary bat was not detected during the course of this survey.

### *Avian Survey Methods*

One avian count station was sited in the center of the project area. An eight-minute point count was conducted at the station. The station was counted once. Field observations were made with the aid of Leitz 10 X 42 binoculars and by listening for vocalizations. Counts were conducted between 06:45 a.m. and 10:00 a.m., the peak of daily bird activity. Time not spent counting was used to search the study site for species and habitats that were not detected during count sessions.



### *Avian Survey Results*

A total of 70 individual birds, of 10 different species, representing nine-separate families were recorded during the station count (Table 2). An additional species, Pacific Golden-Plover (*Pluvialis fulva*), was recorded as an incidental observation while transiting the site. Pacific Golden-Plover are an indigenous migratory shorebird species. The other ten species recorded are all considered to be alien to the Hawaiian Islands (Table 2). One of the alien species Red Junglefowl (*Gallus gallus*) is currently not considered to be established on the Island of Hawai'i; the birds recorded are probably domestic chickens, which are running loose within the general project area. No endemic avian species, nor any species currently listed as threatened, endangered or proposed for listing under either the federal or State of Hawaii endangered species statutes were recorded on the site.

Avian diversity and densities were in keeping with the habitat present within the project area. Three species; Java Sparrow (*Padda oryzivora*), House Finch (*Carpodacus mexicanus*), and Japanese White-eye (*Zosterops japonicus*), accounted for slightly less than 56% of the total number of all birds recorded during the station count. The most common avian species recorded was Java Sparrow, which accounted for slightly more than 20% of the total number of individual birds recorded.

**Table 2 - Avian Species Detected, Hilo Entertainment Center Site**

| *Common Name* | *Scientific Name* | *ST* | *AB* |
|---|---|---|---|
| | GALLIFORMES | | |
| | PHASIANIDAE - Pheasants & Partridges | | |
| | Phasianinae - Pheasants & Allies | | |
| Red Junglefowl | *Gallus gallus* | D | 2 |
| | CHARADRIIFORMES | | |
| | CHARADRIIDAE - Lapwings & Plovers | | |
| | Charadriinae - Plovers | | |
| Pacific Golden-Plover | *Pluvialis fulva* | IM | I-1 |
| | COLUMBIFORMES | | |
| | COLUMBIDAE - Pigeons & Doves | | |
| Spotted Dove | *Streptopelia chinensis* | A | 1 |
| Zebra Dove | *Geopelia striata* | A | 7 |
| | PASSERIFORMES | | |
| | TIMALIIDAE - Babblers | | |
| Hwamei | *Garrulax canorus* | A | 1 |

Table 2 Continued,

| *Common Name* | *Scientific Name* | *ST* | *AB* |
|---|---|---|---|
| | ZOSTEROPIDAE - White-eyes | | |
| Japanese White-eye | *Zosterops japonicus* | A | 12 |
| | STURNIDAE - Starlings | | |
| Common Myna | *Acridotheres tristis* | A | 7 |
| | CARDINALIDAE - Cardinals Saltators & Allies | | |
| Northern Cardinal | *Cardinalis cardinalis* | A | 3 |
| | FRINGILLIDAE - Fringilline and Carduline Finches & Allies | | |
| | Carduelinae - Carduline Finches | | |
| House Finch | *Carpodacus mexicanus* | A | 13 |
| | PASSERIDAE - Old World Sparrows | | |
| House Sparrow | *Passer domesticus* | A | 10 |
| | ESTRILDIDAE - Estrildid Finches | | |
| | Estrildinae - Estrildine Finches | | |
| Java Sparrow | *Padda oryzivora* | A | 14 |

Key To Table 2

| | |
|---|---|
| ST | Status |
| D | Domesticated Species – not considered established in the wild on Hawai'i |
| A | Alien Species – introduced to the Hawaiian Islands by humans |
| IM | Indigenous Migrant Species – native, but also found elsewhere naturally |
| AB | Abundance - Number of birds detected during count session |
| I | Incidental – birds recorded while transiting the site, but not during count session |

## *Discussion*

### *Botanical Resources*

The geologic substrate in this area is a Mauna Loa lava flow that dates from 3,000 to 10,000 years before present (BP) (Wolfe and Morris 1996). The original vegetation of the general area was lowland rainforest, per Gagne and Cuddihy (1990), consisting of a closed canopy forest of *'ōhi'a* (*Metrosideros polymorpha*), *lama* (*Diospyros sandwicensis*) and *hala* (*Pandanus tectorius*), along with a diverse array of canopy and understory trees, shrubs, herbs, vines and ferns, including *hāpu'u* (*Cibotium sp.*), *'uki* sedge (*Machaerina mariscoides*) and *uluhe* (*Dicranopteris linearis*).

Hilo has a long history of farming during both traditional Hawaiian times and the past two centuries. A summary of Hilo land use history reported that early Western visitors remarked on the forest line that appeared uniformly about four or five miles inland from the coast (McEldowney 1979:22). The areas *makai* of the forest line were converted by slash-and-burn early in prehistory into cropland and grassland. For many centuries, much of the inland portion of Hilo was covered in gardens of taro (*Colocasia esculenta*) that were associated with residences. The gardens were often outlined by windbreaks of sugar cane, banana (*Musa* spp.), and *wauke* (barkcloth) (*Brousonettia papyrifera*). Interspersed with settlements were mixed groves of trees with economic uses such as *kukui* (*Aleurites molluccana*), *hala*, coconut (*Cocos nucifera*), *ulu* (*Artocarpus altilis*), *'ōhi'a 'ai* (*Syzygium malaccense*), *milo* (*Thespesia populnea*) and *hau* (*Hibiscus tiliaceus*). Platforms or mounds of rock were constructed to promote the growth of gourds, *ti* (*Cordyline fruticosa*) and *noni* (*Morinda citrifolia*) plants.

This particular property is reported to have a history of agricultural and urban uses, and judging from the vegetation and substrate, large portions of the property appear to have undergone complete or partial clearing within the last ten years. The site is dominated by common lowland alien plants, almost to the exclusion of native species. In addition to the 100 species of plants recorded during the course of this survey the archeological team also reported two additional alien plant species, Royal Poinciana (*Delonix regia*), and banana. Neither of these species were present at the time that we conducted our surveys of the site. All four indigenous species recorded on the site are commonly encountered ruderal species.

### *Mammalian Resources*

The findings of the mammalian survey are consistent with numerous other surveys conducted in similar habitat in the South Hilo District in recent years (David 2001, 2002a, 2003a, 2005, 2006a, 2006b, 2006c, 2007a, 2007b, David et al. 2004). Although, Hawaiian hoary bats were not recorded during this survey, bats have been recorded on numerous recent surveys conducted within the general Hilo area (Bonaccorso et al. 2005, 2007, David 2001, 2002a, 2002b, 2002c, 2003a, 2003b, 2005, 2006a, 2006b, 2007a, 2007b, 2007c). It can be expected that Hawaiian hoary bats use resources within the general project area on a seasonal basis.

The Hawaiian hoary bat is a typical lasurine bat, and as such, they primarily lead a solitary existence, described as "over-dispersed". They generally roost cryptically in foliage, which makes them difficult to study (Findley and Tomich 1983, Jacobs 1994, Carter *et al.* 2000). Fundamental research into this species distribution and life cycle has just begun (Bonaccorso et al. 2005, 2007). Data gathered as part of a three year project to study this species, its distribution, densities and life history are just being prepared for publication. Key findings include the opinion that at least on the Island of Hawai'i, the bat is ubiquitous in areas that still have forest or dense cover. They have also concluded that the species is a human commensal species and has adapted to roost in, and prey upon alien species (Bonaccorso et al. 2005, 2007).

The two mammalian species detected during the course of this survey, dog and small Indian mongoose are both considered to be alien to the Hawaiian Islands.

### *Avian Resources*

Avian diversity and densities were in keeping with the habitat present within the project area, and with the results of numerous other surveys conducted in similar habitat in the South Hilo District during recent years (David 2001, 2002a, 2002b, 2002c, 2003a, 2003b, 2005, 2006a, 2006b, 2006c, 2007a, 2007b, David et al. 2004).

Of the 11-different species recorded during this survey all but one are alien to the Hawaiian Islands. The lone native species detected, Pacific Golden-Plover is an indigenous migratory

shorebird species that nests in the High Arctic returning to Hawaii and the Tropical Pacific during the late summer. They spend the fall and winter months in the central and southern Pacific, returning north in late April and early May. One species detected, Red Junglefowl is not currently considered to be established in the wild on the island of Hawai'i. We recorded both adult and sub-adult birds, indicting that this species continues to breed in the wild on Hawai'i and continues to expand it's feral population on the island. Whether this species has reached the point where it can maintain a wild breeding population without the further aid of humans is unclear at this juncture.

Although not detected during this survey, it is possible that small numbers of the endangered endemic Hawaiian Petrel (*Pterodroma sandwichensis*), or *ua'u*, and the threatened Newell's Shearwater (*Puffinus auricularis newelli*), or *'a'o*, over-fly the project area between the months of May and November (Banko 1980a, 1980b, Day et al. 2003a, Harrison 1990). There is no suitable nesting habitat within or close to the project area for either of these pelagic seabird species.

Hawaiian Petrels were formerly common on the Island of Hawai'i (Wilson and Evans 1890–1899). This pelagic seabird reportedly nested in large numbers on the slopes of Mauna Loa and in the saddle area between Mauna Loa and Mauna Kea (Henshaw 1902), as well as at the mid-to-high elevations of Mount Hualālai. Within recent historic times, Hawaiian Petrels have been reduced to relict breeding colonies located at high elevations on Mauna Loa, and possibly, Mount Hualālai (Banko 1980a, Banko et al. 2001, Cooper and David 1995, Cooper et al. 1995, Day et al. 2003a, Harrison 1990, Hue et al. 2001, Simons and Hodges 1998).

Newell's Shearwaters were formerly common on the Island of Hawai'i (Wilson and Evans 1890–1899). This species breeds on Kaua'i, Hawai'i, and Moloka'i in extremely small numbers. Newell's Shearwater populations have dropped precipitously since the 1880s (Banko 1980b, Day et al., 2003b). This pelagic species nests high in the mountains in burrows excavated under thick vegetation, especially *uluhe* (*Dicranopteris linearis*) fern.

The primary cause of mortality in both Hawaiian Petrels and Newell's Shearwaters is thought to be predation by alien mammalian species at the nesting colonies (USFWS 1983, Simons and Hodges 1998, Ainley et al. 2001). Collision with man-made structures is considered to be the second most significant cause of mortality of these seabird species in Hawai'i. Nocturnally flying seabirds, especially fledglings on their way to sea in the summer and fall, can become disoriented by exterior lighting. When disoriented, seabirds often collide with manmade structures, and if they are not killed outright, the dazed or injured birds are easy targets of opportunity for feral mammals (Hadley 1961, Telfer 1979, Sincock 1981, Reed et al. 1985, Telfer et al. 1987, Cooper and Day 1998, Podolsky et al. 1998, Ainley et al. 2001). There is no suitable nesting habitat within or close to the project area for either of these pelagic seabird species.

Although not detected during the course of this survey it is probable that the endangered Hawaiian Hawk (*Buteo solitarius*) is occasionally present within the general project area (David 2008). Hawaiian Hawks are currently found in nearly all habitats that still have some large tree components on the island (Klavitter 2000). They are regularly seen foraging in the South Hilo



area (David 2002a, 2002c, 2003b, 2006b 2007c, 2008). Hawk densities are highest in mature, native species dominated forests, with grassy under-stories. This habitat, with high amounts of forest edge, supports large populations of game birds and the four species of introduced rodents known from the island, all of which are prey items for the hawk. Additionally, this type of habitat also provides numerous perches and nesting sites suitable for this species (Klavitter 2000). Currently there is no suitable nesting or perching habitat present within the project site suitable for use by this species.

***Potential Impacts to Protected Species***

***Botanical Resources***

Based on the urban setting, the lack of threatened, endangered and rare species, and the general weediness of the vegetation it is unlikely that the clearing and redevelopment of this parcel of land will impact any botanical resources that are protected under either federal or State of Hawai'i endangered species statutes.

***Hawaiian Hoary Bat***

Currently there is no vegetation present on the site that is suitable as roosting habitat for Hawaiian hoary bats. It is possible that following build out of the proposed project that ornamental landscaping associated with the development will attract volant insects on which this endangered species forage on, thus providing additional foraging opportunities for this species.

***Hawaiian Petrels and Newell's Shearwaters***

The principal potential impact that clearing, grubbing, construction and operation of the Hilo Entertainment Center poses to Hawaiian Petrels and Newell's Shearwaters, is the increased threat that birds will be downed after becoming disoriented by exterior lighting that may be required in conjunction with construction activities, or following build out with exterior lighting associated with the development. It should be noted that the proposed development is sited within an already developed urban area that already has extensive outdoor lighting.

***Potential Impacts to Critical Habitat***

There is no federally delineated Critical Habitat within the greater Hilo area, thus none will be modified by the proposed development.

***Conclusions***

There is nothing unique about the project site or it's vegetation. There is abundant like habitat in, and around Hilo. It is not expected that the construction or operation of the proposed Hilo Entertainment Center will result in deleterious impacts to native botanical, avian or mammalian resources present within the general project area.

*Recommendations*

1. Project planners may wish to employ native plant species in their landscape design, many of which are very attractive and also generally require less water than many introduced species.

2. To reduce the potential for interactions between nocturnally flying Hawaiian Petrels and Newell's Shearwaters with external lights and man-made structures, it is recommended that any external lighting planned to be used during construction be shielded (Reed et al. 1985, Telfer et al. 1987). This mitigation would serve the dual purpose of minimizing the threat of disorientation and downing of Hawaiian Petrels and Newell's Shearwaters, while at the same time complying with the Hawaii County Code § 14 – 50 *et seq.* which requires the shielding of exterior lights so as to lower the ambient glare caused by unshielded lighting to the astronomical observatories located on Mauna Kea.



*Glossary:*

Alien – Introduced to Hawai'i by humans
*Chiroptera* – The taxonomic order in which bats are placed by taxonomists
Crepuscular – Twilight hours.
Endangered – Listed and protected under the Endangered Species Act of 1973, as amended as an endangered species.
Endemic – Native and unique to the Hawaiian Islands
Indigenous – Native to the Hawaiian Islands, but also found elsewhere naturally
Lasurine – A genus of bats in the family *vespertilionidae*
*Makai* – Down-slope, towards the ocean
Nocturnal – Night-time, after dark
Pelagic – An animal that spends its life at sea – in this case seabirds that only return to land to nest and rear their young
Relict – A species or community that formerly had a wider distribution but now survives in only a few locations such as refugia
Ruderal – Disturbed, rocky, rubbishy areas, such as old agricultural fields and rock piles
Sign – Biological term referring tracks, scat, rubbing, odor, marks, nests, and other signs created by animals by which their presence may be detected
Threatened – Listed and protected under the ESA as a threatened species
*Vespertilionidae* – Family of bats known as common bats, in the order *chiroptera*
Volant – Flying, capable of flight, as in flying insect

BP – Before present, a term used in volcanology and geology
DLNR – Hawaii State Department of Land & Natural Resources
ESA – Endangered Species Act of 1973, as amended
TMK – Tax Map Key
USFWS – U.S. Fish & Wildlife Service

*Literature Cited:*


Ainley, D. G, R. Podolsky, L. Deforest, G. Spencer, and N. Nur. 2001. The Status and Population Trends of the Newell's Shearwater on Kaua'i: Insights from Modeling, *In*: Scott, J. M, S. Conant, and C. Van Riper III (editors) *Evolution, Ecology, Conservation, and Management of Hawaiian Birds: A Vanishing Avifauna.* Studies in Avian Biology No. 22:. Cooper's Ornithological Society, Allen Press, Lawrence, Kansas. (Pg. 108-123)

American Ornithologist's Union. 1998. *Check-list of North American Birds.* 7th edition. AOU. Washington D.C. 829pp.

_____. 2000. Forty-second supplement to the American Ornithologist's Union *Check-list of North American Birds.* Auk 117:847-858.

Banks, R. C., C. Cicero, J. L. Dunn, A. W. Kratter, P. C. Rasmussen, J. V. Remsen, Jr., J. D. Rising, and D. F. Stotz. 2002. Forty-third supplement to the American Ornithologist's Union *Check-list of North American Birds.* Auk 119:897-906.

_____. 2003 Forty-fourth supplement to the American Ornithologist's Union *Check-list of North American Birds.* Auk 120:923-931.

_____. 2004 Forty-fifth supplement to the American Ornithologist's Union *Check-list of North American Birds.* Auk 121:985-995.

_____. 2005 Forty-sixth supplement to the American Ornithologist's Union *Check-list of North American Birds.* Auk 122:1031-1031.

_____. 2006 Forty-seventh supplement to the American Ornithologist's Union *Check-list of North American Birds.* Auk 123:926-936.

Banks, R. C., C. R. Terry Chesser, C. Cicero, J. L. Dunn, A. W. Kratter, I. J. Lovette, P. C. Rasmussen, J. V. Remsen, Jr., J. D. Rising, and D. F. Stotz. 2007 Forty-eighth supplement to the American Ornithologist Union *Check-list of North American Birds.* Auk 124:1109-1115.

Banko, W. E. 1980a. Population Histories- Species Accounts Seabirds: Hawaiian Dark rumped Petrel ('Ua'u). Cooperative National Park Resources Studies Unit, University of Hawaii at Manoa, Department of Botany, Technical Report #5B.

_____. 1980b. Population Histories- Species Accounts Seabirds: Newell's Shearwater ('A'o). Cooperative National Park Resources Studies Unit, University of Hawaii at Manoa, Department of Botany, Technical Report #5A.

Banko, P. C., R. E. David, J. D. Jacobi, and W. E. Banko. 2001. Conservation Status and Recovery Strategies for Endemic Hawaiian Birds, *In*: : Scott, J. M, S. Conant, and C. Van Riper III (editors) *Evolution, Ecology, Conservation, and Management of Hawaiian Birds: A Vanishing Avifauna.* Studies in Avian Biology No. 22. Cooper's Ornithological Society, Allen Press, Lawrence, Kansas (Pg. 359-376).





Bonaccorso, F. J., C. M. Todd and, A. C. Miles. 2005. Interim Report on Research to Hawaiian Bat Research Consortium for The Hawaiian Hoary Bat, Ope'ape'a, *Lasiurus cinsereus semotus.* 1 September 2004 to 31 August 2005.

_____. 2007. Interim Report on Research to Hawaiian Bat Research Consortium for The Hawaiian Hoary Bat, Ope'ape'a, *Lasiurus cinsereus semotus.* April 1, 2007.

Carter, T. C., M. A. Menzel, and D. Saugey. 2000. Population Trends of Foliage-Roosting Bats *in*, O'Shea, T. J. and M. A. Bogan (editors), Interim Report of the Workshop on Monitoring Trends in U. S. Bat Populations: Problems and Prospects. U. S. Geological Survey, Midcontinent Ecological Science Cneter, Fort Collins, Colorado, 124 pp. Also available on line from : http://www.mesc.usgs.gov/BPD/ireport.htm

Cooper, B. A. and R. E. David. 1995. Radar and Visual Surveys of Seabirds in the HELCO SSP Unit 71, Puna, Hawaii, During July 1995. Prepared for R. M. Towill Corporation & Hawaii Electric Light Co.

Cooper, B.A., R.E. David, and R.J. Blaha. 1995. Radar and Visual Surveys of Endangered Seabirds and Bats in the Pohakuloa Training Area, Hawai'i, During Summer 1995. Prepared for R.M. Towill Corporation and the U.S. Army Corps of Engineers, Pacific Division (POD).

Cooper, B. A and R. H. Day. 1998. Summer Behavior and Mortality of Dark-rumped Petrels and Newells' Shearwaters at Power Lines on Kauai. Colonial Waterbirds, 21 (1): 11-19.

David, R. E. 2001. A Survey of Avian and Mammalian Species Hilo International Airport Improvement Project, South Hilo District, Hawai'i. Prepared for: Wilson Okamoto & Associates and the State of Hawai'I Department of Transportation Airports Division (HDOT-A).

_____. 2002a. An Audio Playback Survey for Hawaiian Hawks on the Hawai'i Army National Guard, Keaukaha Military Reservation, Hilo, Hawai'I – Spring 2002. Prepared for: Hawaii Army National Guard.

_____. 2002b. An Electronic and Visual Survey of Hawaiian Hoary Bats on the Hawai'i Army National Guard, Keaukaha Military Reservation, Hilo, Hawai'I – Fall 2002. Prepared for: Hawai'i Army National Guard.

_____. 2002c. An Audio Playback Survey for Hawaiian Hawks on the Hawai'i Army National Guard, Keaukaha Military Reservation, Hilo, Hawai'i. Prepared for: Hawaii Army National Guard.

_____. 2003a. A Survey of Avian and Terrestrial Mammalian Species on the Proposed Home Depot Site, South Hilo District, Hawai'i. Prepared for: Weston Solutions and the State of Hawai'i, Department of Hawaiian Homes (DHHL).

David, R. E. 2003b. Visual and Electronic Surveying for Hawaiian Hoary Bats and Audio Playback Survey for Hawaiian Hawks on the Hawai'i Army National Guard – A Field Training Workshop, Keaukaha Military Reservation, Hilo, Hawai'i. Prepared for: Hawaii Army National Guard.

_____. 2005. A Survey of Avian and Terrestrial Mammalian Species, Reed's Bay Beach Park, South Hilo District, Island of Hawai'i. Prepared for: Geometrician Associates PL.L.C. & The County of Hawai'i Department of Parks and Recreation.

_____. 2006a. A Survey of Avian and Terrestrial Mammalian Species, Mana Industrial Park Property, TMKs (3) 2-1-12:4, 5, 6, 9, 25, 26, and 2-1-13:151, South Hilo District, Island of Hawai'i. Prepared for: Geometrician Associates L.L.C. & The State of Hawai'i, Department of Land and Natural Resources.

_____. 2006b. A Survey of Avian and Terrestrial Mammalian Species, Kūkūau Street to Kapi'olani Road Mohouli Drainage Improvement Project, South Hilo District, Island of Hawai'i. Prepared for SSFM International, Inc., and the Hawaii County, Department of Public Works.

_____. 2006c.An Audio Playback Survey for Hawaiian Hawks on the Phase 1A Site, University of Hawai'i, Hilo Campus, Island of Hawai'i. Prepared for: Godfrey Engineering, LLC.

_____. 2007a. A Survey of Avian and Mammalian Resources, Keaukaha Military Reservation, Hilo, Hawaii. Prepared for Amec Earth & Environmental and the Hawaii Army National Guard.

_____. 2007b. A Survey of Avian and Terrestrial Mammalian Species, Kaūmana Drive Flood Protection Project, South Hilo District, Island of Hawai'i. Prepared for: Belt Collins Hawaii, Inc. & The County of Hawaii Department of Public Works.

_____. 2007c. Electronic and Visual Surveys of Hawaiian Hoary Bats, Keaukaha Military Reservation, Hilo, Hawaii. Prepared for Amec Earth & Environmental and the Hawaii Army National Guard.

_____. 2008. Unpublished field notes – Island of Hawai'i 1985-2008.

David, R. E., R. Terry, and L. Yoshida 2004. A Survey of Avian, Terrestrial Mammalian and Botanical Resources on the L. D. S. Kilauea / Kaumana Wards, Ponohawai Street Site, TMK: 2-3-36:19 South Hilo District, Hawai'i. Prepared for: Edmond Akiona Architect and The Kilauea / Kaumana Wards of the Church of Later Day Saints

Day, R. H., B. Cooper, and R. J. Blaha. 2003a. Movement Patterns of Hawaiian Petrels and Newell's Shearwaters on the Island of Hawai'i. Pacific Science, 57, 2:147-159.

Day, R. H., B. Cooper, and T. C. Telfer. 2003b. Decline of Townsend's (Newell's Shearwaters (*Puffinus auricularis newelli*) on Kauai, Hawaii. The Auk 120: 669-679.



Department of Land and Natural Resources. (DLNR). 1998. Indigenous Wildlife, Endangered and Threatened Wildlife and Plants, and Introduced Wild Birds. Department of Land and Natural Resources. State of Hawaii. Administrative Rule §13-134-1 through §13-134-10, dated March 02, 1998.

Federal Register. 2005. Department of the Interior, Fish and Wildlife Service, 50 CFR 17. Endangered and Threatened Wildlife and Plants. Review of Species That Are Candidates or Proposed for Listing as Endangered or Threatened; Annual Notice of Findings on Resubmitted Petition; Annual Description of Progress on Listing Actions. Federal Register, 70 No. 90 (Wednesday, May 11, 2005): 24870-24934.

Findley, J. S., and P. Q. Tomich 1983. Morphological Affinities of the Hawaiian Hoary Bat. Unpublished ms.

Gagne, W., and L. Cuddihy. 1990. "Vegetation," pp. 45-114 in W.L. Wagner, D.R. Herbst, and S.H. Sohmer, eds., *Manual of the Flowering Plants of Hawai'i*. 2 vols. Honolulu: University of Hawai'i Press.

Hadley, T. H. 1961. Shearwater calamity on Kauai. Elepaio 21:60.

Harrison, C. S. 1990. *Seabirds of Hawaii: Natural History and Conservation*. Cornell University Press, Ithica, N.Y. 249 pp.

Henshaw, H.W. 1902. *Complete list of birds of the Hawaiian Possessions with notes on their habits*. Thrum, Honolulu. 146 pp.

Hue, D., C. Glidden, J. Lippert, L. Schnell, J. MacIvor and J. Meisler. 2001. Habitat Use and Limiting Factors in a Population of Hawaiian Dark-rumped Petrels on Mauna Loa, Hawai'i. , *in:* : Scott, J. M, S. Conant, and C. Van Riper III (editors) *Evolution, Ecology, Conservation, and Management of Hawaiian Birds: A Vanishing Avifauna*. Studies in Avian Biology No. 22. Cooper's Ornithological Society, Allen Press, Lawrence, Kansas (Pg. 234-242).

Jacobs, D. S. 1994. Distribution and Abundance of the Endangered Hawaiian Hoary Bat, *Lasiurus cinereus semotus*, on the Island of Hawai'i. Pacific Science, Vol. 48, no. 2: 193-200.

Klavitter, J. L. 2000. Survey methodology, abundance, and demography of the endangered Hawaiian Hawk: Is de-listing Warranted? Unpublished Master of Science Thesis. University of Washington.

McEldowney, H. 1979. *Archaeological and Historical Literature Search and Research Design, Lava Flow Control Study, Hilo, Hawaii*. Prep. For U.S. Army Engineer Division, Pacific Ocean, Honolulu, HI. Honolulu: Bishop Museum.

Podolsky, R., D.G. Ainley, G. Spencer, L. de Forest, and N. Nur. 1998. "Mortality of Newell's Shearwaters Caused by Collisions with Urban Structures on Kaua'i". Colonial Waterbirds 21:20-34.

Pukui , M. K., S. H. Elbert, and E. T. Mookini. 1976. *Place Names of Hawaii*. University of Hawaii Press. Honolulu, Hawai'i. 289 pp.

Reed, J. R., J. L Sincock, and J. P. Hailman 1985. Light Attraction in Endangered Procellariform Birds: Reduction by Shielding Upward Radiation. Auk 102: 377-383.

Simons, T. R., and C. N. Hodges. 1998. Dark-rumped Petrel (Pterodroma phaeopygia). *In* A. Poole and F. Gill (editors). The Birds of North America, No. 345. The Academy of Natural Sciences, Philadelphia, PA. And the American Ornithologists Union, Washington, D.C.

Sincock, J. L. 1981. Saving the Newell's Shearwater. Pages 76-78 in Proceedings of the Hawaii Forestry and Wildllife Conference, 2-4 October 1980. Department of Land and Natural Resources, State of Hawaii, Honolulu.

Telfer, T. C. 1979. Successful Newell's Shearwater Salvage on Kauai. 'Elepaio 39:71

Telfer, T. C. , J. L. Sincock, G. V. Byrd, and J. R. Reed. 1987. Attraction of Hawaiian seabirds to lights: Conservation efforts and effects of moon phase. Wildlife Society Bulletin 15:406-413.

Tomich, P.Q. 1986. *Mammals in Hawaii*. Bishop Museum Press. Honolulu, Hawaii. 37 pp.

U.S. Fish & Wildlife Service (USFWS) 1998. Recovery Plan for the Hawaiian Hoary Bat. U.S. Fish & Wildlife Service, Portland, Oregon.

_____. 2005. Endangered and Threatened Wildlife and Plants. 50CFR 17:11 and 17:12 (Tuesday, November 1, 2005).

_____. 2008. USFWS Threatened and Endangered Species System (TESS), online at http://ecos.fws.gov/tess_public/StartTESS.do

Wagner, W.L., D.R Herbst, and S.H. Sohmer. 1990. *Manual of the Flowering Plants of Hawai'i*. University of Hawaii Press, Honolulu, Hawaii 1854 pp.

Wagner, W.L. and D.R. Herbst. 1999. *Supplement to the Manual of the flowering plants of Hawai'i*, pp. 1855-1918. *In:* Wagner, W.L., D.R. Herbst, and S.H. Sohmer, Manual of the flowering plants of Hawai'i. Revised edition. 2 vols. University of Hawaii Press and Bishop Museum Press, Honolulu.

Wilson, S. B., and A. H. Evans. 1890-1899. *Aves Hawaiiensis: The birds of the Sandwich Islands*. R. H. Porter, London.

Wolfe, E.W., and J. Morris. 1996. *Geologic Map of the Island of Hawai'i*. USGS Misc Investigations Series Map i-2524-A. Washington, D.C.: U.S. Geological Survey.

# Appendix E

Archeological Assessment Report
(Alan Haun & Associates)

Report 571-021008

# ARCHAEOLOGICAL ASSESSMENT

## TMK: (3) 2-2-30:17 and 19

## LAND OF WAIAKEA

## SOUTH HILO DISTRICT

## ISLAND OF HAWAI'I

By:

Alan E. Haun, Ph.D.

Prepared for:

Hooluana Place LLC
P.O. Box 5508
Hilo, HI 96720

February 2008

**Haun & Associates**

Archaeological, Cultural, and Historical Resource Management Services
HCR 1 Box 4730, Keaau, Hawaii 96749 Phone: 982-7755 Fax: 982-6343

## Introduction

At the request of Hooluana Place LLC, Haun & Associates has prepared an archaeological assessment of the 6.23-acre TMK: (3) 2-2-30: 17 and 19 located in the Land of Waiakea, South Hilo District, Island of Hawai'i (*Figures 1* and *2*). The objective of the survey was to satisfy historic preservation regulatory review requirements of the Department of Land and Natural Resources-Historic Preservation Division (DLNR-SHPD), as contained within Hawaii Administrative Rules, Title 13, DLNR, Subtitle 13, State Historic Preservation Rules (2003).

No archaeological sites or features were identified during the survey, therefore the project is documented as an archaeological assessment pursuant to Chapter 13-284-5(5A). As required, this report contains a description of the project area, field methods and background research.

## Project Area Description

The project area consists of an irregularly-shaped 6.23-acre parcel that varies in elevation from c. 19 to 32 ft, bordered by Mililani Street to the east, by Hualani Street to the north by Kekuanaoa Street to the south and by the Waiakea Villas development to the west (*Figure 3*). There is an existing tennis court and associated shed located in the northeastern portion of the parcel, adjacent to Mililani Street to the west (*Figure 4*). The area to the north and west of the tennis court is a maintained grass lawn with large Flame trees (*Delonix regia* [Bojer] Raf.) and African Tulip (*Spathodea campanulata*) trees growing along the edges. A slightly depressed swampy area is situated to the southwest of the tennis court. *Cryptosperma* sp. plants and bananas (*Musa* spp.) are growing within the depressed area. A gravel parking lot is present along Mililani Street, south of the tennis court. The remaining portion of the parcel is comprised of undeveloped land that has been mechanically grubbed. Secondary growth vegetation consisting of various grasses, ferns and vines are growing throughout this disturbed area. An example of the vegetation in the undeveloped portion of the parcel is depicted in *Figure* 5.

The terrain within the project area is relatively level and the soil is comprised of Keaukaha extremely rocky muck on 6-20% slopes (Sato et al. 1973: Sheet Number 74). According to Sato et al., this soil occurs near the city of Hilo and is comprised of a thin surface layer of very dark brown muck over pahoehoe lava bedrock (1973:57). This soil evidences a rapid permeability, a medium runoff and a slight erosional hazard. Sato et al. (1973:27) indicates that much of this soil type is in native forest with some areas having been cleared for pasture and sugarcane. Wolfe and Morris (2001) indicate that the lava flows within the project area originated from Mauna Loa Volcano deposited 750 to 1,500 years ago. The rainfall in the vicinity of the project area ranges from 150 to 155 inches per year (Juvik and Juvik 1998:57).

### Field Methods

The field work portion of the project was conducted on February 20, 2008 under the direction of Alan Haun, Ph.D. The field work portion of the project required 1 labor day to complete. The project area was subjected to 100% surface examination with the surveyors spaced at 10.0 m intervals. The transected were oriented in a north-south direction, parallel to Mililani Street. No surface archaeological sites or features were identified during the survey.

A series of 10 to 12 probes were excavated with a machete in all areas of the project area were soil was present. These probes evidenced 3 to 5 cm of soil over bedrock with no cultural remains present. Several fragments of waterworn coral were observed on the ground surface during the survey, located between the gravel parking lot and the depressed swampy area. A 0.3 m diameter shovel test (ST) was excavated in the area of the surface coral (see *Figure 3*).

## Background Research

The project area is situated in the *ahupua'a* of Waiakea in South Hilo District. The *ahupua'a* is one of the largest in the district covering over 95,000 acres. The *ahupua'a* extends along the coast from the west side of Hilo Bay to the Puna District boundary and inland to approximately 6,000 ft elevation. Much of the following is summarized from *Hilo Bay: A Chronological History* (Kelly et al. 1981), an extensive and thorough compendium of historical information about Hilo including Waiakea.

Hawaiian traditional and legendary accounts attest to the longstanding importance of Waiakea. The chief of the Hilo region, Kulukulu'a, who resided in Waiakea, was the first conquest of 'Umi-a-Liloa in his campaign to unify the districts of Hawaii Island. Hilo with its large bay, fishponds, wet taro fields, and abundant freshwater was a population center for commoners and royalty. Kamehameha I and his court presided in Hilo in the 1890s. In preparation for his planned invasion of Kauai in 1802, Kamehameha built a canoe fleet at Hilo, reportedly consisting of 800 vessels.

In 1824, a missionary station was established in Waiakea. Soon after, churches and schools were established. Whalers began stopping at Hilo in the mid-1820s. In the 1830s, a sawmill was built, and two stores were opened. By the end of the decade, a sugar cane plantation and mill were established on Ponahawai lads. By 1857, there were three sugar cane mills in the Hilo area. Large tracts of land were put in cane cultivation and sugar cane was also grown by individuals around their houses. A sugar mill was established in Waiakea at the inland end of Waiakea Fishpond in the late 1870s. By 1880, 1,400 acres of sugar cane were in cultivation and by the end of the decade over 5,600 acres were cultivated. In the 1900s, the population of Hilo grew dramatically with the expansion of sugar cane cultivation, pineapple production, the timber industry, and other commercial developments.

McEldowney (1979) used limited site inventory and historic documentary evidence to develop a traditional Hawaiian land use and settlement pattern model for the Hilo area. The model consists of five elevation-defined zones: Coastal Settlement, Upland Agricultural, Lower Forest, Rainforest, and Sub-Alpine or Montane. The Coastal Settlement Zone extended approximately 0.5 miles inland from the shoreline between sea level and 50 ft elevation. The zone was the most densely populated with both permanent and temporary habitations, high status chiefly residences, and *heiau*. Settlements were concentrated at Hilo Bay and sheltered bays and coves.

The Upland Agricultural Zone was situated between approximately 50 ft and 1,500 ft elevation. Settlement in the zone consisted of scattered residences among economically beneficial trees and agricultural plots of dryland taro and bananas. Lava tubes were utilized for shelter. A pattern of shifting cultivation is believed to have converted the original forest cover to parkland of grass and scattered groves of trees. Wetland cultivation of taro occurred along streams.

The Lower Forest Zone ranged from 1,500 ft to 2,500 ft elevation. Timber and other forest resources such as medicinal plants, *olona*, and birds were gathered from the zone. Site types consisted of temporary habitations, trials, shrines, and minor agricultural features in forest clearings and along streams. Sites in the Rainforest Zone (2,500-5,000 ft elevation) and Sub-alpine or Montane Zone (5,000-9,000 ft) were limited to trails and associated temporary habitations. These zones were used for intra-island travel and gathering of valued resources including hardwoods, birds, and stone for tool making.

The project area is situated within the lower portion of McEldowney's Upland Agricultural Zone where scattered residences and agricultural plots were situated in prehistoric to early historic times. Historic site types in the project area vicinity likely included plantation agriculture-related features and residences.





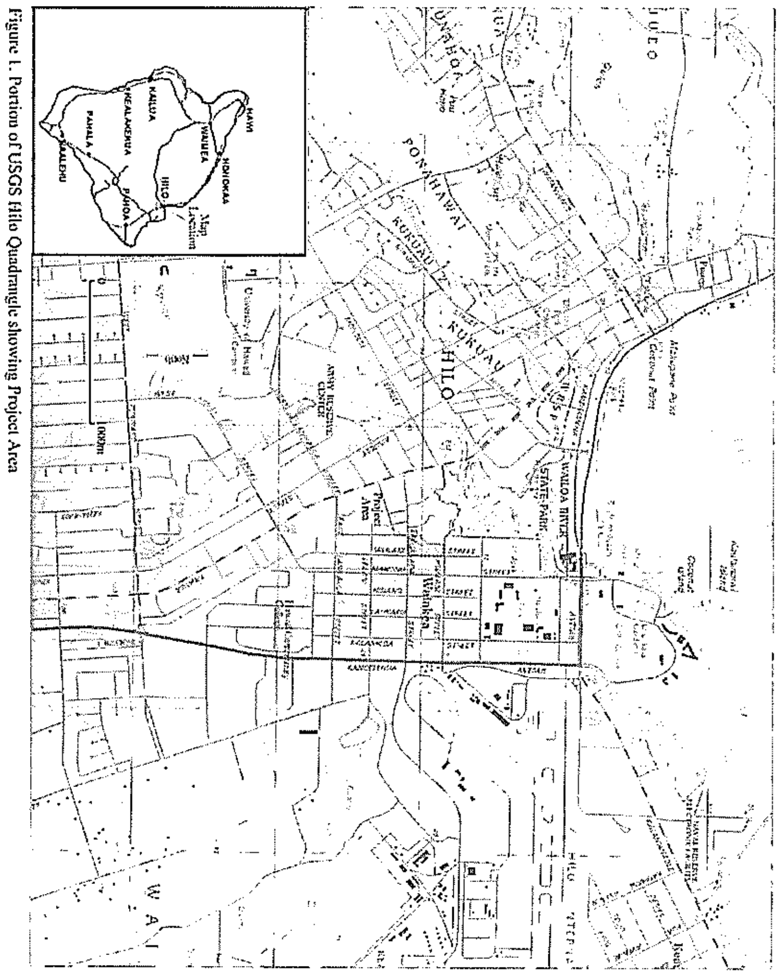


Figure 1. Portion of USGS Hilo Quadrangle showing Project Area

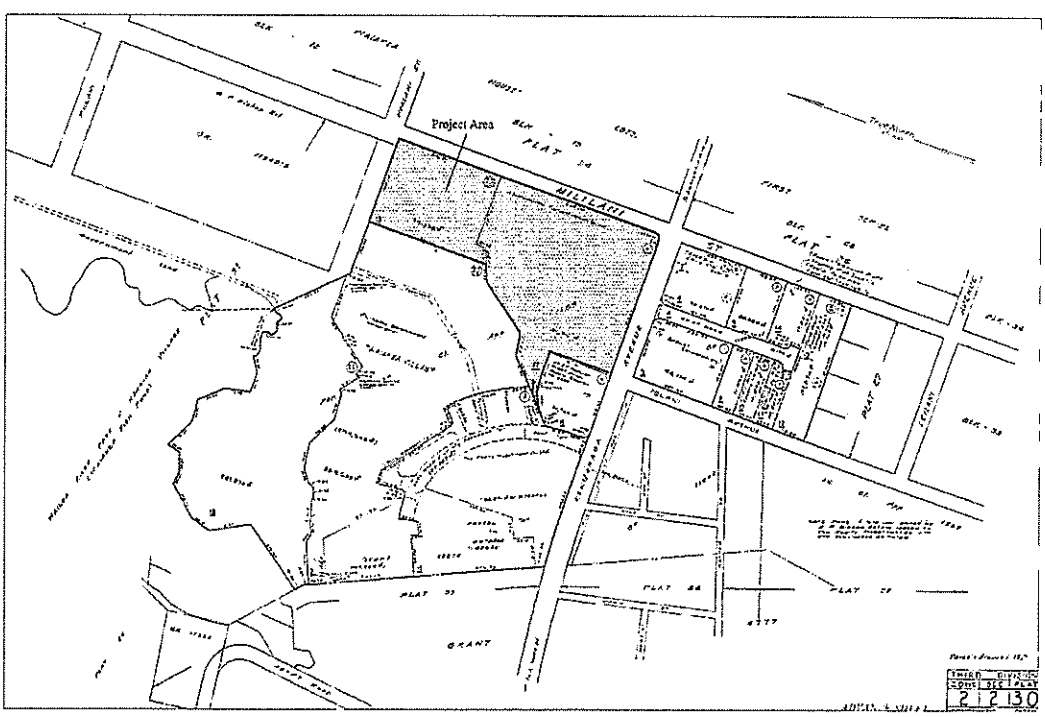


Figure 2. Tax Map Key 2-2-30 showing Project Area



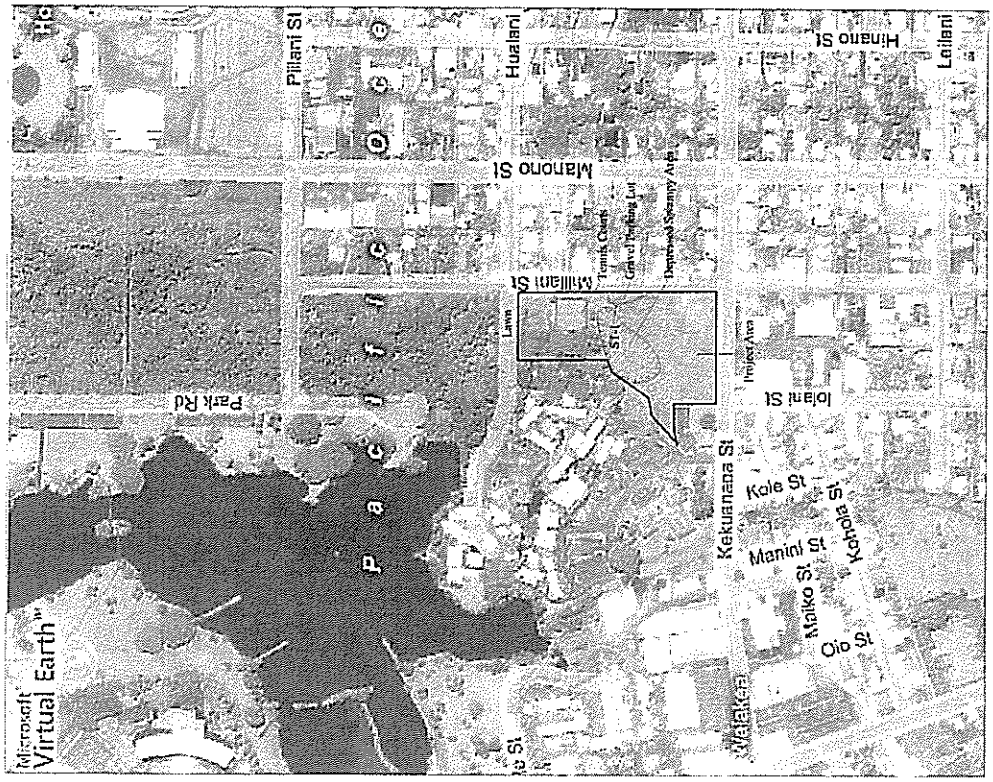


Figure 3. Project Area Overview (from Microsoft Virtual earth)

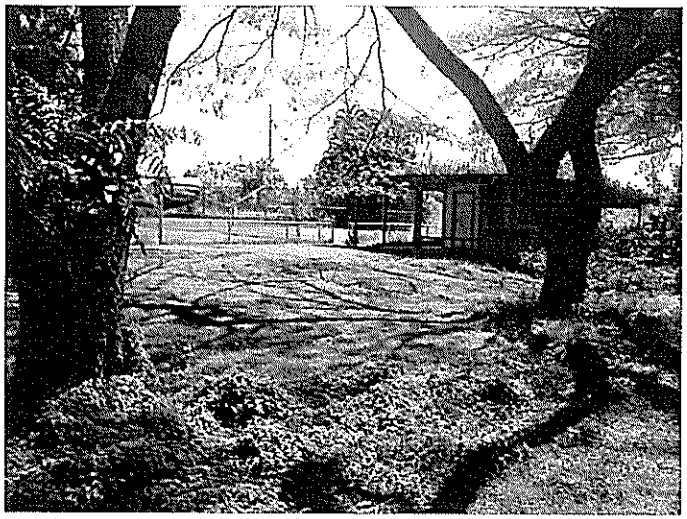

Figure 4. Tennis Court, Shed and Grass Lawn, view to east

Figure 5. Overview of Disturbed Portion of Project Area, view to northeast



## Findings

No surface archaeological sites or features were identified within the project area and no Land Commission Awards are present. As stated, the northern portion of the parcel is comprised of a tennis court, an associated shed and a maintained grass lawn. The remainder of the parcel has been mechanically leveled evidenced by the low secondary growth vegetation. The low height of the vegetation in this area indicates that this disturbance may have occurred as recently as two years ago.

The results of the shovel test excavated in the area in which surface coral was present indicates that this area has been filled, likely during the construction of the gravel parking lot. This ST yielded 0.15 m of a dark grayish brown (10YR 4/2) gravelly silt over bedrock with 70% cobble and pebble inclusions and. Materials recovered from this ST consisted of a fragment of waterworn coral a fragment of a waterworn *Nerita* sp. shell, pieces of concrete and a fragment of modern glass. Scattered fragments of waterworn coral were also observed on the surface of the adjacent gravel parking lot. The waterworn nature of the coral and the marine shell fragment indicates that this material was imported to its current location. No further archaeological work is recommended based on the negative survey results.

## References


DLNR (Department of Land and Natural Resources)
2003 Hawaii Administrative Rules, Title 13. Dept. of Land and Natural Resources, Subtitle 13, State Historic Preservation Division Rules.

Juvik, S.P. and J.O. Juvik (editors)
1998 *Atlas of Hawaii*, Third Edition. University of Hawaii Press. Honolulu.

Kelly, M., B. Nakamura and D.B Barrere
1981 Hilo Bay: A Chronological History, Land and Water Use in the Hilo Bay Area, Island of Hawaii. Prepared for U.S. Army Engineer District, Honolulu.

McEldowney, H.
1979 Archaeological and Historical Literature Search and Research Design: Lava Flow Control Study, Hilo, Hawaii. Prepared for the U.S. Army Engineer District, Honolulu. Department of Anthropology. Bishop Museum.

Sato, H.H., W. Ikeda, R. Paeth, R. Smythe, and M. Takehiro, Jr.
1973 *Soil Survey of the Island of Hawaii, State of Hawaii.* U.S. Department of Agriculture, Soil Conservation Service and University of Hawaii Agricultural Experiment Station. Washington, D.C.: Government Printing Office.

Wolfe, E.W., and J. Morris
2001 Geologic Map of the Island of Hawaii. U.S. Department of the Interior, U.S. Geological Survey. Miscellaneous Investigations Series.

# Appendix F

Cultural Impact Assessment

*T. S. Dye & Colleagues, Archaeologists, Inc.*
*735 Bishop St., Suite 315, Honolulu, Hawai'i 96813*

# Cultural Impact Assessment for Hilo Family Entertainment Center in Waiākea, South Hilo, Hawai'i, TMK:(3)2–2–030:17 and 19*

Thomas R. Wolforth, M.S.

April 3, 2008

## Contents

1 Introduction 2
1.1 Survey Area . . . 3
1.2 Environment . . . 3
1.3 Background Research . . . 4
1.3.1 The Taming of the Wild . . . 4
1.3.2 A Royal Center from Antiquity to the Last of the Royalty . . . 6
1.3.3 The *Maka'āinana* . . . 7
1.3.4 Burial Locations on and Near the Waiākea Peninsula . . . 9
1.3.5 Changing Ownership, the *Māhele* . . . 9
1.3.6 Historical Developments . . . 9
1.3.7 Previous Archaeological Investigations . . . 10

2 Resource Assessment for the Project Area 11

3 Conclusion 12

Glossary 13

Bibliography 14

*Prepared for Ho'oluana Place LLC, P.O. Box 5308, Hilo, HI 96720.



*ahupua'a*



## Illustrations

1 Project location . . . 4
2 Project location on a tax map . . . 5
3 Northern project area . . . 5
4 Central project area . . . 6
5 Byron map of 1825 . . . 8
6 Previously recorded sites . . . 10
7 Waiākea in 1882 . . . 12
8 Waiākea in 1930 . . . 13
9 Waiākea Canec plant in 1949 . . . 14

**Abstract**

Ho'oluana Place LLC proposes to build a Family Entertainment Center on 6.2 ac. of land formally used by the Waiākea Mill Company in Hilo. Documents indicate that this part of Waiākea was not used for habitation or agricultural purposes during traditional times, and there are no legendary associations, archaeological sites, or loci of cultural practices for this land. The sugar mill dominates the historical developments at this location. Based on the results of these investigations, there are no traditional cultural properties or cultural practices being conducted at this project area. Consequently, this project development will not disturb or otherwise impact properties or practices of this kind.

## 1 Introduction

Mr. Craig Lindner of Ho'oluana Place LLC proposes to build a Family Entertainment Center on 6.2 ac (2.5 ha) in Waiākea *ahupua'a*, South Hilo District on the parcel indicated on tax maps as TMK (3)2–2–030:17 and 19. This Cultural Impact Assessment has been prepared to identify and assess impacts to any cultural resources that may be present within this parcel.

The Cultural Impact Assessment has been prepared in accordance with State of Hawai'i guidelines and regulations. Part of the assessment centers on the concept of identifying traditional cultural properties and, if present, determining whether they would be impacted by the project. Traditional cultural property means any historic property associated with the traditional practices and beliefs of an ethnic community or members of that community for more than fifty years. These traditions shall be founded in an ethnic community's history and contribute to maintaining the ethnic community's cultural identity. Traditional associations are those demonstrating a continuity of practice or belief until present or those documented in historical source materials, or both. The origin of the traditional cultural properties concept is found in National Register Bulletin 38 published by the U.S. Department of Interior National Park Service. The term *traditional*, as it is used, implies a time depth of at least 50 years, and a generalized mode of transmission of information from one generation to the next, either orally or by act. The term *cultural* refers to the beliefs, practices, lifeways, and social institutions of a given community. The use of the term *property* defines this category of resource as an identifiable place. Traditional cultural properties are not intangible, i.e., they must

have some kind of boundary. They are subject to the same kind of evaluation as any other historic resource, with one important exception. By definition, the significance of traditional cultural properties should be determined by the community that values them.

This Cultural Impact Assessment includes consideration of the broader concept of cultural practices and beliefs provided in the November 19, 1997 Guidelines for Assessing Cultural Impacts from the Hawai'i State Office of Environmental Quality Control, which also outlines data sources and methods for consulting individuals and/or organizations with knowledge of the area's cultural resources, practices, and beliefs, or of its historical and natural resources. According to the OEQC guidelines, cultural practices and beliefs subject to assessment may include subsistence, commercial, residential, agricultural, access-related, recreational, and religions and spiritual customs. The types of cultural resources subject to assessment may include traditional cultural properties or other types of historic sites, both man-made and natural, that support such cultural beliefs.

The following kinds of data were researched to assess the cultural resources of the project area: traditional literature and histories; Land Commission Award and other *māhele* data; archaeology reports; local newspaper articles; information available at the Laupāhoehoe Train Museum and the Pacific Tsunami Museum; and maps available at the University of Hawai'i at Hilo Hawaiian Collection of the Mo'okini Library.

No individuals were contacted or interviewed for this Cultural Impact Assessment. Based on the history of land use and the current status of the land (sec. 1.3, pg. 4), no interviews were deemed to be necessary. These data sets are synthesized in the presentation of the cultural history of project area.

## 1.1 Survey Area

The 6.2 ac. survey area is in the *ahupua'a* of Waiākea, in South Hilo District, Island of Hawai'i (fig. 1) at TMK:(3)2–2–030:17 and 19 (fig. 2). The eastern boundary is along Mililani Street. The northern project boundary is along Hualani Street, and the southern boundary is at Kekūanaō'a Street. The western boundary is irregular, sharing a border with neighboring Waiākea Villas, a residential complex with shops and offices.

## 1.2 Environment

The project area is situated on a series of lava flows that originated from Mauna Loa between 750 and 1,500 years ago [25]. This flow forms the east side of Hilo Bay, and has created the Keaukaha shoreline and Waiākea peninsula. Annual rainfall of 150–200 in. (3.8–5.1 m) [10] in this area is in part responsible for the creation of the dense and once difficult to travel through Pana'ewa forest [2; 3].

Soil, referred to as "Keaukaha extremely rocky muck, 6 to 20 percent slopes" [19:57], is sparse on these flows. The "soil" is mostly decomposing organic matter over decomposing bedrock. There is no original soil at the project area, due to the highly modified nature of the landscape. Bulldozing, building construction, and building destruction has taken place over the entire project area. The project area is currently in alien grasses, weeds and shrubs (fig. 3). Broken cement slabs, remnants of the mill, are scattered throughout the project area (fig. 4).





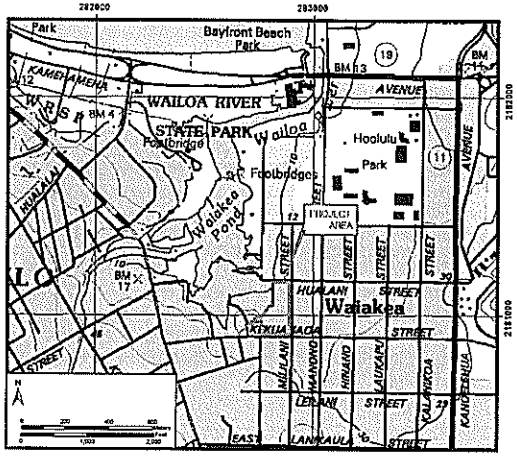


Figure 1. Project location on a portion of the Hilo quadrangle USGS topographic map.

## 1.3 Background Research

The proposed Hilo Family Entertainment Center project is in the *ahupua'a* of Waiākea. Waiākea translates literally as "broad waters" [16:220].

There are many Hawaiian legends associated with Hilo and its environs. They relate to the gods, the people, and in some instances the relationship between the two. The content of some of the legends reflects the antiquity of occupation in the Hilo area, and the importance of the place as a seat of power. A selection of legends and historical events illustrating this point are presented below.

### 1.3.1 The Taming of the Wild

The uplands of Hilo were noted for their wild natural and cultural powers. *Mo'o* lived there, and harassed the occupants of the lower elevations. The gods and goddesses of Hawai'i tamed the natural powers of drought, fire, wind, and the *mo'o*, and brought order and safety to the people of Hilo.

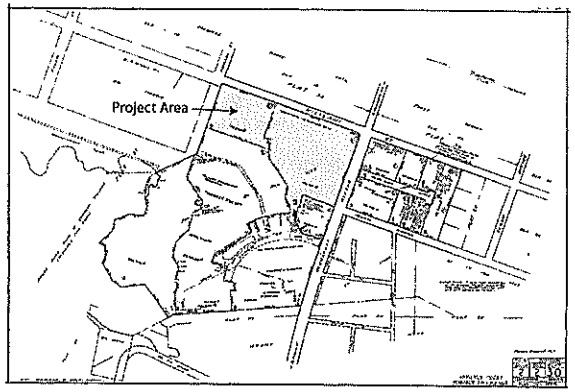


**Figure 2.** Project location on tax map.

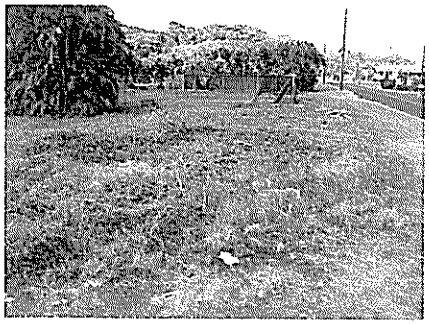

**Figure 3.** Northern portion of project area, with tennis courts in background. View to north.

Pana'ewa, the name for the broad lowlands just to the east of the project area, was portrayed as a forested, uninhabited place in Hawai'i legend, and is depicted in the trials

**Figure 4.** Central portion of project area, with Waiākea Villas in background. View to west.

and tribulations of Hi'iaka as she begins her trek from Kīlauea westward: "Panaewa is a great lehua island; a forest of ohias inland" [24:100]. A *mo'o* named Pana'ewa ruled the wild forest until Hi'iaka was successful in removing him from the land [24]. She also bested the two mischievous *mo'o*, named Piliamo'o and Nohoamo'o, that controlled passage at the mouth of the Wailuku River [24].

### 1.3.2 A Royal Center from Antiquity to the Last of the Royalty

Hilo is likely one of the first two main settlement areas on the island [11] due to its calm and sizable bay, permanent supply of fresh water from the Wailuku River, and fertile and arable soils near the bay. Indeed, one of the early Polynesian travelers to Hawai'i was named Hiro, or Hilo [1], and the attachment of his namesakes to this place supplies some circumstantial evidence to the early occupation here.

The coming of Pa'ao to Hawai'i is commemorated in a legend associated with Hilo. Pa'ao is said to have made his first home in Hawai'i on a rock at the mouth of the Wailuku River [17; 23]. The subsequent history retained through oral transmission over the centuries is anchored on the events, often romantic and violent, of the struggle for power. Pa'ao affected the overthrow of the ancient lineages of power and supplanted them with the new Pili line by intrigues and warfare in Hilo [23].

The town of Hilo was prominent setting in the long campaign of conquest of the islands by Kamehameha. The first major battle campaign after the ascendancy of Kamehameha at Moku'ōhai took place at Hilo, and is referred to as the Battle of the Bitter Rains. Kamehameha went by land from Kona to Hilo, and descended upon Keawema'uhili at Pū'āinakō for three days of battle. Forces from Maui in support of Keawema'uhili joined in the battle, and armies fought over the uplands and shoreline of Hilo for three more days. "Kamehameha's forces were badly used in these battles. Ka-lani-malokulolu-i-ke-

poo-ka-lani was almost killed at Halai. The army was saved only by getting to the sea and going aboard Ke'e-au-moku's fleet" [9:125].

Years later, Keawema'uhili became an ally of Kamehameha. While Kamehameha was battling for control over Maui, Kamehameha's Hawai'i island nemesis, Keuoa Kuahu'ula, made a decisive move on Hilo. When Keouakuahuula heard of the assistance in men and canoes which Keawema'uhili of Hilo had furnished to Kamehameha on his expedition to Maui, he was greatly irritated, and considered it as a breach of the agreement between them to jointly oppose Kamehameha's pretensions to sovereignty. To punish, therefore, his former ally, Keoua invaded Hilo. A battle was fought at 'Alae in Hilo-paliku, in which Keawema'uhili was killed, and Keoua added the district of Hilo to his own possessions of Puna and Ka'ū [6:240].

After another series of later battles in Hāmākua between Kamehameha and Keoua, "Keoua retired to Hilo; Kamehameha went back to Waipi'o and Kohala" [9:151-152]. Keoua "stayed at Pi'opi'o for two days and on the third day he returned to Puna. From Puna he announced that he was the mō'ī of all of Hawai'i" [4:271]. It was immediately following this episode that a significant portion of Keōua's forces were destroyed by rock and ash spewing from the volcano Kilauea during their trek to Ka'ū.

Kamehameha selected Hilo as his base of operations in preparation for launching an attack on O'ahu and the western islands. Upon one trip to Hilo "(i)t is thought that there were as many as seven mano [28,000] people who gathered at the shore at Kaipalaoa when the alii landed in their regal garments" [4:369]. Kamehameha developed a rapport with Vancouver. During one of Vancouver's visits to Hilo "he sent Lieutenant Puget ashore with a red British flag on a wooden staff to wave in the breezes of Hilo. By that flag, the island of Hawai'i was to escape being troubled by other governmental powers" [4:379]. Even after Kamehameha was successful in subduing O'ahu at the battle of Nu'uanu, events in Hilo required his attention. A *kapu* chief from Maui named Namakeha fomented rebellion in the eastern half of the island of Hawai'i while Kamehameha was in O'ahu.

*kapu*

Kamehameha returned to Hawai'i to make war on Na-makeha and his followers. The battle took place at Hilo. Namakeha was defeated, fled, and hid in the bush until he was captured. He was mocked by his enemies, and in January, 1797, with the consent of Kamehameha, he was offered in sacrifice to the gods in the *heiau* of Kaipalaoa in Pi'ihonua, Hilo. "This was the last of the battles fought by Kamehameha to unite the islands" [9:174].

*heiau*

Hilo continued to be a place of power after the death of Kamehameha and after the breaking of the *kapu*. Kalākaua had a residence in Hilo, as did Governess Ruth Ke'elikōlani [26]. Kamehameha III visited in 1829 and 1830 [10]. Governor Kuakini had a mill in Ponahawai. Several of the *ahupua'a* fronting Hilo Bay were personal lands of Kamehameha I [10:40].

Waiākea, which had been retained as a personal land by Kamehameha I, and was at some later time held by the chiefess Kaunuohua, a granddaughter of Keawema'uhili. She surrendered it in the *māhele* of 1848 when it became Crown Land [10:40].

### 1.3.3 The *Maka'āinana*

Rulers and would-be rulers would come and go, but the *maka'āinana*, the common folk, lived on and farmed the land and fished for generations in the Hilo area. The settlement

*maka'āinana* *'ulu*



in Hilo Bay was concentrated in the eastern portion of the shoreline, with perhaps 2,000 people living in 400 houses there in 1823 [10:19]. These residences were just north beyond the project area. Agricultural areas were situated in the fertile soils in the flats to the west of the project area (fig. 5).

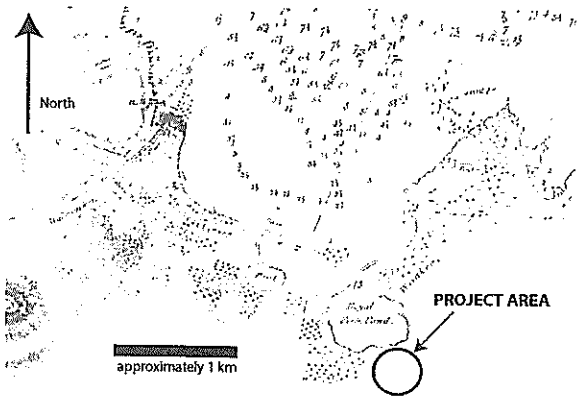


Figure 5. Map of Hilo Bay and environs made in 1825.

The larger *heiau* were concentrated on the western portion of Hilo Bay [21]. This may suggest a segregation between ceremonial and mundane precincts in the Hilo region, with the former being concentrated at the mouth of the Wailuku and the latter at the mouth of the Wailoa River. *Heiau* were also located along the Waiākea coast. These were smaller, or perhaps not as ceremonially prominent, and consequently went unreported to Stokes. One is on the east coast of Reed's Bay [8], and this is the only *heiau* in the Hilo vicinity that still has observable architecture. Another *heiau* once existed at Leleiwi point east of the project area. This *heiau* was a "fish heiau (heiau hooulu ia), named Pū-hala (pandanus tree)" [16:131].

There is a local variant of the popular legend regarding the growth of a plant from a person after their burial, particularly as it relates to sustaining a starving population [1:98]. A man named Ulu lived in Waiākea. He died of famine. Priests directed that his body be buried near a running stream, and an *'ulu* tree sprouted at that location the next day. The fruits of that tree saved the people from starvation.

### 1.3.4 Burial Locations on and Near the Waiākea Peninsula

Many burials were placed along the west and north sides of Waiākea peninsula, approximately 1 km north of the project area. A Mr. Wakefield encountered an "old Hawaiian cemetery [that] was littered with human bones" while building his home in the 1890s [22:2]. Other burials were encountered during the construction of Banyan Drive in 1934 north of the project area: "many small caves containing human skeletons were unearthed as the right-of-way was being cleared" [22:3]. One burial has been identified near the mouth of the Wailoa River in Waiākea near Suisan Fish Market [14; 20].

### 1.3.5 Changing Ownership, the *Māhele*

The *māhele* determined that the *ahupua'a* of Waiākea was Crown Land. The king leased large tracts of Waiākea to a variety of sugar plantations, and by 1892, the area that includes the project area was owned by the Waiākea Mill Company and Hawaiian Cellulose, Ltd. [10:89].

### 1.3.6 Historical Developments

The historical events at Hilo have received attention and presentation elsewhere [4; 7; 10]. Those events and trends that do or may relate directly to the project area are summarized below.

Sandalwood was being shipped out of Hilo Bay in the first 20 years of the nineteenth century [10:25]. In April of 1822, the first missionary, Auna, a Tahitian, preached in Hilo. Many other missionaries soon followed. Whaling ships are documented as docking at Hilo by at least 1824. Whaling declined precipitously during the Civil War due to depredations by the Confederate fleet, increased worldwide use of kerosene, and increased cost of outfitting, among other things [7:32]. Whaling hobbled on in the islands, and the wreck of the *Tamerlane* in 1892 marks the end of commercial whaling in the region [18].

Due to economic, cultural and natural forces, the focus of habitation had fully shifted from the Wailoa River side of Hilo Bay to the Wailuku River side of the bay by 1885. Hilo in 1885 was a small settlement with only a few hundred inhabitants. Waiākea had no frame buildings, just a few grass homes after the tidal wave of 1877. The industrial and commercial concerns began to expand in the Wailoa River vicinity. Markets, landings, agriculture, and milling soon flourished in the Waiākea side of the bay [10]. Habitation then increased in the Waiākea area on the heels of the industrial developments in the late 1800s and early 1900s.

Small sugar operations were present in and around Hilo as early as the 1830s [10:81]. Groups began to merge and grow in the mid-nineteenth century, and by the late 1800s there were nine sugar plantations owning or leasing a combined total of 120,000 ac., although in 1880 only roughly 2,500 ac. were in cultivation [10:89].

The Waiākea Mill company, originally situated west of the project area and eventually growing to encompass the entire project area, began production in 1879 [10:121]. Begun as a lease, the mill took ownership of the land in 1903. The industrial area was expanded in 1932 when a plant opened there to produce wall boards for buildings using bagasse, the byproduct of producing sugar from sugar cane [10:136]. These wall boards were refered to as canec. The mill stopped producing sugar in 1947, but bagasse production continued



until 1966. A hotel complex was built on the disassembled plant and mill site, and that eventually became the Waiākea Villas apartment and associated office complex that exists there today.

There are no standing remnants of the mill.

### 1.3.7 Previous Archaeological Investigations

There are no recorded archaeological sites in the project area (fig. 6). The few recorded resources in the area are all historical buildings.

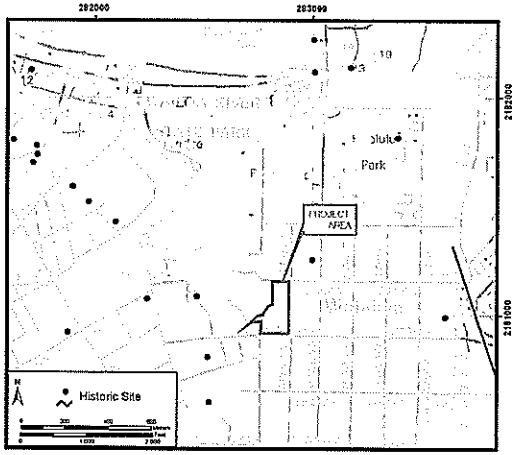


Figure 6. Recorded cultural resources in the vicinity of the proposed project.

Several archaeological investigations in Waiākea have been conducted in the lowlands around Hilo town and Pana'ewa. In addition, there are several small projects that have been conducted at various elevations of this large *ahupua'a*. Consequently, not much is known about the distribution of archaeological resources in Waiākea. To date the best model for settlement distribution is that created by McEldowney [13].

Few archaeological sites have been recorded from the results of the projects conducted in the lower elevations of Waiākea. Whether this is due to actual lack of prehistoric activity

cannot be assessed with certainty due to the extent of disturbance by the 200 years of growing Hilo town. Projects conducted just *mauka* of town have encountered a burial in a cave, sugar industry features, and World War II features.

*mauka*

The Hilo Family Entertainment Center project is situated at the transition between the Coastal Settlement Zone and Upland Agricultural Zone of the east Hawai'i settlement model. Settlements were concentrated nearby towards the ocean, and the steadily sloping uplands begin approximately 500 m to the southwest. Given the project area's proximity to the ancient fishponds, it is likely that this area was used more like a Coastal Zone, as opposed to the Upland Zone. The majority of residential units in this area were concentrated with the Coastal Zone. Fishponds for *ali'i* and *maka'āinana* were created, maintained, and used all along the coast. The basic cultivated crops such as irrigated and dry taro, bananas, breadfruit, *kukui* nuts, pandanus and ti were grown in these lower elevations. They did not grow uniformly over the coastal zone, however. The heavily weathered soils on the Mauna Kea flows along the western portion of Hilo Bay were particularly well suited for agriculture. This bias towards the western area is evident in the distribution of fields portrayed in an early depiction of the Hilo Bay (see fig. 5, pg. 8). The eastern half Hilo Bay and farther south and east are covered by younger Mauna Loa flows that lack the level of soil development present on the Mauna Kea flows.

*ali'i*

*kukui*

Burials were also interred in the Coastal Settlement Zone. Sand dunes are a preferred burial location [11], and it should be expected that prehistoric burials exist within some portion of the sandy shoreline of Hilo Bay. One burial has been identified near the mouth of the Wailoa River in Waiakea [14; 20]. Another has been identified in a small cave at 400 ft. elevation approximately 2 km (1.2 mi.) inland from Hilo Bay [5].

## 2 Resource Assessment for the Project Area

Habitation and agricultural sites are not expected in the project area, based on current models of settlement subsistence, and none have been identified to date within the project area. The map created in 1825 (see fig. 5, pg. 8) is a fair representation of how the inhabitants used the land at that time, and probably for centuries before. No habitation areas or agricultural fields are present in the project area on that map.

Early depictions of the developing Hilo indicate that habitation and agriculture did not take place in the project area. The Waiākea Mill Company mill was situated at the interior of the Wailoa ponds by 1882 (fig. 7). By 1930, paved roads were added and residential and commercial areas were in place to the west, south, and east of the project area (fig. 8). The railroad was in place by then, but no railway line ran through this area.

Although the railroad was discontinued after the 1946 tsunami event, the Waiākea Mill Company continued production, using the paved road network to get product to and from port. By the time the plant was dismantled in 1966, the mill covered a large portion of the inland terminus of the Wailoa Ponds, including the project area (fig. 9).



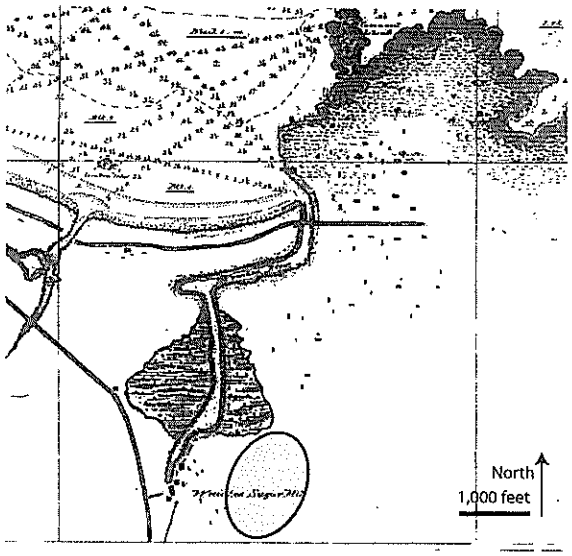


Figure 7. Waiākea in 1882 showing the mill west of the project area.

## 3 Conclusion

The 87 year operation of the Waiākea Mill Company and associated canec production in this area has had a significant influence on the potential for traditional cultural properties and cultural practices within the project area. The landscape today reflects the industrial history; rubble from the mill occurs within a ground surface that has been modified to support warehouses and mill buildings that no longer exist. Any resources from periods prior to the mill no longer exist, and there have been no subsequent events or practices that constitute traditional cultural properties or cultural practices as they are defined for purposes of this study. The results of the historical research are sufficient to document this situation, and consequently, no interviews were deemed necessary to investigate potential traditional cultural properties or cultural practices.

No traditional cultural properties are present at the project area. In addition, no cultural practices are being conducted at the project area. The construction and imple-

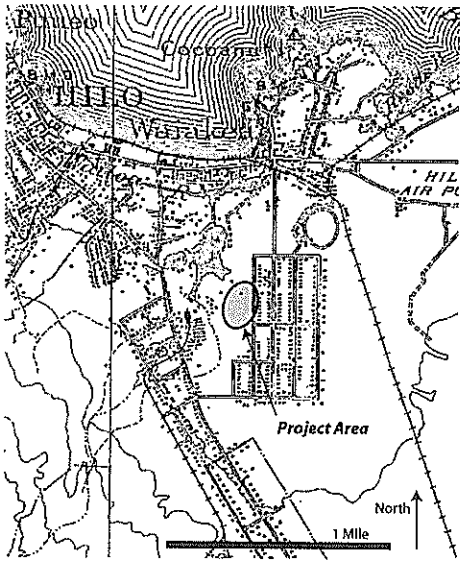


Figure 8. Waiākea in 1930 with expanding residential and commercial development.

mentation of the Hilo Family Entertainment Center will have no impact to traditional cultural properties or cultural practices.

## Glossary

Entries for Hawaiian words are excerpted or paraphrased, where possible, from the *Hawaiian Dictionary* [15], or from Lucas [12].

*ahupua'a* Traditional Hawaiian land division usually extending from the uplands to the sea.

*ali'i* Chief, chiefess, officer, ruler, monarch, peer, head man, noble, aristocrat, king, queen, commander.

*'ulu* The breadfruit tree, *Artocarpus altilis*.



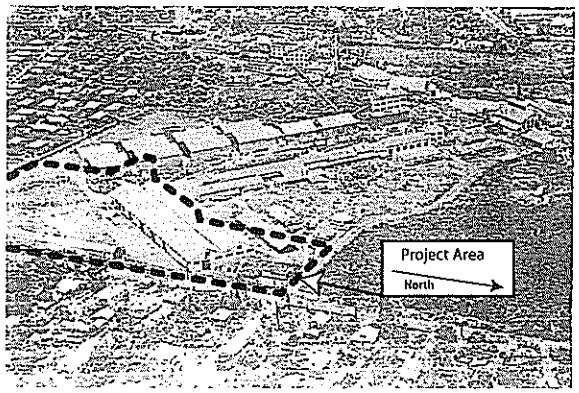


Figure 9. Waiākea Canec plant in 1949 with storage buildings in foreground within project area. View to southwest. Image from Kelly et al. [10]:139.

*heiau* Traditional Hawaiian place of worship.

*kapu* Taboo, prohibition; special privilege or exemption from ordinary taboo; sacredness; prohibited, forbidden; sacred, holy, consecrated; no trespassing, keep out.

*kukui* The candlenut, *Aleurites moluccana*.

*maka'āinana* Commoner, populace, people in general.

*mauka* Inland, upland, toward the mountain.

*mo'o* Lizard, reptile of any kind, dragon, serpent; water spirit.

## Bibliography

[1] Beckwith, M. (1970). *Hawaiian Mythology*. Honolulu: University of Hawaii Press.

[2] Bloxam, A. (1925). *Diary of Andrew Bloxam, Naturalist of the "Blonde" on her Trip from England to the Hawaiian Islands, 1824–25*. Number 10 in Special Publications of B. P. Bishop Museum. Honolulu: The Museum.

[3] Cuddihy, L. W. and C. P. Stone (1990). *Alteration of Native Hawaiian Vegetation: Effects of Humans, Their Activities and Introductions*. Honolulu: University of Hawaii National Park Resources Studies Unit.

[4] Desha, S. L. (2000). *Kamehameha and His Warrior Kekūhaupi'o*. Honolulu: Kamehameha Schools Press. Translated by Frances N. Frazier.

[5] Escott, G. (2003). *An Archaeological Inventory Survey on Approximately 288 Acres of Land for the University of Hawai'i - Hilo Mauka Lands Development.* Prepared for PBR Hawai'i. Honolulu: Scientific Consulting Services.

[6] Fornander, A. (1996). *Ancient History of the Hawaiian People to the Times of Kamehameha I.* Honolulu: Mutual Publishing.

[7] George, M. C. (1948). *The Development of Hilo, Hawai'i.* Ann Arbor, MI: The Edwards Letter Shop.

[8] Kam, W. (1989). Unrecorded heiau on state lands, Waiākea, South Hilo, Hawai'i. Typescript in State Historic Preservation Division Library, Kapolei, HI.

[9] Kamakau, S. M. (1992). *Ruling Chiefs of Hawaii* (Revised ed.). Honolulu: Kamehameha Schools Press.

[10] Kelly, M., B. Nakamura, and D. B. Barrère (1981, March). *Hilo Bay: A Chronological History; Land and Water Use in the Hilo Bay Area, Island of Hawai'i.* Prepared for U.S. Army Engineer District, Honolulu. Honolulu: Anthropology Department, B. P. Bishop Museum.

[11] Kirch, P. V. (1985). *Feathered Gods and Fishhooks: An Introduction to Hawaiian Archaeology and Prehistory.* Honolulu: University of Hawaii Press.

[12] Lucas, P. F. N. (1995). *A Dictionary of Hawaiian Legal Land-Terms.* Honolulu: Native Hawaiian Legal Corporation and University of Hawai'i Committeee for the Preservation and Study of Hawaiian Language, Art and Culture.

[13] McEldowney, P. H. (1979, May). *Archaeological and Historic Literature Search and Research Design Lava Flow Control Study, Hilo, Hawai'i.* Prepared for U.S. Army Engineer Division, Pacific Ocean. Honolulu: Anthropology Department, B. P. Bishop Museum.

[14] Pietrusewsky, M. (1989). Human remains found at Wailoa Bridge renovation project, Waiākea, South Hilo. Typescript in State Historic Preservation Division Library, Kapolei, HI.

[15] Pukui, M. K. and S. H. Elbert (1971). *Hawaiian Dictionary* (Third ed.). Honolulu: University of Hawaii Press.

[16] Pukui, M. K., S. H. Elbert, and E. T. Mookini (1974). *Place Names of Hawaii.* Honolulu: University of Hawaii Press.

[17] Reed, F. (1987). *Hilo Legends.* Hilo, HI: Petroglyph Press.

[18] Rogers, R. (1999). *Shipwrecks of Hawai'i.* Hale'iwa, HI: Pilialoha Publishing.

[19] Sato, H. H., W. Ikeda, R. Paeth, R. Smythe, and M. Takehiro, Jr. (1973). *Soil Survey of the Island of Hawaii, State of Hawaii.* Washington, DC: U.S. Department of Agriculture, Soil Conservation Service in cooperation with the University of Hawaii Agricultural Experiment Station.



[20] Smith, M. and P. Tourtellotte (1988). Wailoa Bridge renovation project, site no. 50-10-11,115, burial removal. Memorandum to files, State Historic Preservation Division, Kapolei, HI.

[21] Stokes, J. F. G. (1991). *Heiau of the Island of Hawai'i: A Historic Survey of Native Hawaiian Temple Sites.* Number 2 in Bishop Museum Bulletin in Anthropology. Honolulu: Bishop Museum. Edited and introduced by Tom Dye.

[22] Warshauer, K. (2003). Early development of Reed's Bay shores. *Hawai'i Tribune-Herald*, August 3.

[23] Westervelt, W. D. (1977). *Hawaiian Historical Legends.* Rutland, VT: Charles E. Tuttle Company.

[24] Westervelt, W. D. (1999). *Hawaiian Legends of Volcanoes.* Honolulu: Mutual Publishing.

[25] Wolfe, E. W. and J. Morris (1996). *Geologic Map of the Island of Hawaii.* Number I-2524 in Miscellaneous Investigations Series. Denver, CO: U.S. Geological Service.

[26] Zambucka, K. (1992). *The High Chiefess Ruth Ke'elikōlani.* Honolulu: Green Glass Productions.

# Appendix G

Traffic Impact Analysis

# TRAFFIC IMPACT ANALYSIS REPORT
# FOR
# HILO FAMILY ENTERTAINMENT CENTER
# HILO, HAWAII
# TMK (3)2-2-030:017 AND 019

## I. PROJECT DESCRIPTION

Hooluana Place LLC wishes to develop the two referenced parcels in a complex with a bowling alley, some retail shops, two restaurants, and a sports bar. The proposed project is located at the northwest corner of the intersection of Kekuanaoa Street and Mililani Street. The project is to be served primarily from Mililani Street.

## II. EXISTING CONDITIONS

Currently the project area is undeveloped with single-family residences on the east side of Mililani Street. One block east of the project area is the signalized intersection of Kekuanaoa Street and Manono Street. Kekuanaoa Street is a main east-west connector street connecting downtown Hilo with the airport. The signalized intersection is set up so that all lefthand movements have left turn lanes.

## III. Traffic Volumes

On February 27, 2008, traffic counts were taken at the intersection of Kekuanaoa Street and Monono Street. These counts were performed at 15-minute intervals from 6:00 AM to 9:00 AM and 3:00 PM to 6:00 PM at this location. The peak hours were determined from this and found to be for the AM peak hour, from 7:15 AM to 8:15 AM and 4:00 PM to 5:00 PM for the PM peak hour. Traffic counts were not taken at the intersection of Kekuananoa Street and Mililani Street, however, typical turning movements for an existing condition were negligible. Therefore a minimum volume was assumed.

TABLE 1 PEAK HOURS OF TRAFFIC FLOW

| *Location* | *Time* | *Vehicles per hour* |
|---|---|---|
| Kekuanaoa Street & Manono | 7:15 AM-8:15 AM | 1648 |
| Kekuanaoa Street & Monono | 4:00 PM-5:00 PM | 2061 |
| Kekuanaoa Street to Mililani | 7:15 AM-8:15 AM | 1012 |
| Kekuanaoa Street to Mililani | 4:00 PM-5:00 PM | 1187 |



TABLE 2 INTERSECTION MODEL OF KEKUANAOA STREET & MANONO STREET

| *Direction* | *AM* | *PM* |
|---|---|---|
| Eastbound Left (EBL) | 93 | 137 |
| Eastbound Through (EBT) | 307 | 421 |
| Eastbound Right (EBR) | 11 | 25 |
| Westbound Left (WBL) | 19 | 97 |
| Westbound Through (WBT) | 969 | 435 |
| Westbound Right (WBR) | 24 | 42 |
| Northbound Left (NBL) | 63 | 63 |
| Northbound Through (NBT) | 259 | 332 |
| Northbound Right (NBR) | 49 | 54 |
| Southbound Left (SBL) | 72 | 106 |
| Southbound Through (SBT) | 213 | 264 |
| Southbound Right (SBR) | 69 | 85 |

## IV. LEVEL OF SERVICE

Level of service is defined as "a qualitative measure describing operational conditions within a traffic stream; generally described in terms of such factors as speed and travel time, freedom to maneuver, traffic interruptions, comfort and convenience, and safety." There are six levels of operational conditions defined as follows:

| | |
|---|---|
| Level of Service A | Little or no traffic delays |
| Level of Service B | Short traffic delays |
| Level of Service C | Average traffic delays |
| Level of Service D | Long traffic delays |
| Level of Service E | Very long traffic delays |
| Level of Service F | Extreme traffic delays |

Levels of service were determined for the various turning movements for the intersection of Kekuanaoa Street and Manono Street for the existing conditions. Calculations were performed in accordance with the analysis laid out in the Highway Capacity Manual, Special Report 209, 2nd Edition of the Transportation Research Board, 1992 and the Highway Capacity software from the Federal Highway Administration and McTrans, University of Florida, Gainesville, FA.

# HILO FAMILY ENTERTAINMENT CENTER
# TRAFFIC IMPACT ANALYSIS
# HILO, HAWAII

## TMK (3)2-2-030:017 & 019

June 2008

**PREPARED FOR**

CRAIG LINDNER
PBR HAWAII & ASSOCIATES, INC.

**PREPARED BY**

WITCHER ENGINEERING LLP
75-5751 KUAKINI HIGHWAY, SUITE 106
KAILUA-KONA, HI 96740
(808)334-0322

## TABLE OF CONTENTS

I. PROJECT DESCRIPTION ..... 1
II. EXISTING CONDITIONS ..... 1
III. TRAFFIC VOLUMES ..... 1
A. Table 1 Peak Hour Flow ..... 1
B. Table 2 Intersection Model of Kekuanaoa St & Manono St. ..... 2
IV. LEVEL OF SERVICE ..... 2
V. PROJECTED TRAFFIC ..... 3
A. Methodology ..... 3
B. Trip Generation ..... 3
Table 3 Direction Distribution in Percentages ..... 3
Table 4 Trip Generation ..... 4
Table 5 Direction Distribution ..... 4
C. Traffic Distribution Assumptions ..... 4
Table 6 Turning Movement Distribution ..... 5
Table 7 Level of Service ..... 6
Table 8 Level of Service ..... 6
VI. LEFT TURN ANALYSIS ..... 6
VII. CONCLUSION AND RECOMMENDATIONS ..... 7

APPENDIX A Vicinity Map, Tax Map Key
APPENDIX B Level of Service, Present Conditions
APPENDIX C Level of Service, Future Conditions
APPENDIX D Turning Movements, Present Conditions
APPENDIX E Turning Movements, Future Conditions
APPENDIX F Level of Service Criteria, Signalized and Unsignalized Intersections

## V. PROJECTED TRAFFIC

### A. *Methodology*

The trip generation methodology used in this report is based upon applications developed by the Institute of Transportation Engineers (ITE) and published in "Trip Generation", 5th Edition, 1991. Trip generations have been developed for a variety of land uses (or facility types) which correlated trips with dwelling units, area, population, vehicle ownership; and intensity of use. Each facility type has a catalog number for identification purposes. The land use codes are shown below.

### B. *Trip Generation*

As stated earlier, the developer wishes to construct a bowling alley, retail shops, two restaurants, and a sports bar. The land use codes are as follows:

| | |
|---|---|
| Bowling Alley | 494 |
| Restaurant (high turnaround) | 832 |
| Restaurant (quality) | 831 |
| Sports Bar* | 832 |
| Retail Merchandise | 810 |

*There is no land use code for Sports Bars, so high-turnaround restaurant is being used as something closely resembling the patronage.

The following assumptions are made for the trip generation.

1. For AM peak, the bowling alley and the high-turn-around restaurant will be the only thing open.
2. Since there is no land use code for sports bars, the land use code for high-turnaround restaurant is used.

TABLE 3 DIRECTION DISTRIBUTION IN PERCENTAGES

| *Direction* | *AM* | *PM* |
|---|---|---|
| Eastbound | 24.6 | 29 |
| Westbound | 37.6 | 30 |
| Northbound | 20.7 | 22.9 |
| Southbound | 17.1 | 18.1 |



TABLE 4 TRIP GENERATION

| *Facility* | *Landscape Code* | *Area 1000 ft²* | *Trip Generator* | *% Enter* | *% Exit* | *Entering* | *Exiting* |
|---|---|---|---|---|---|---|---|
| AM | | | | | | | |
| Bowling Alley | 494 | 37.5 | 3.12 | 60 | 40 | 70.2 | 46.8 |
| Restaurant (high-turnaround) | 832 | 3.3 | 15.70 | 50 | 50 | 25.9 | 25.9 |
| Totals | | | | | | 96 | 73 |
| PM | | | | | | | |
| Bowling Alley | 494 | 37.5 | 3.54 | 35 | 65 | 46.5 | 86.3 |
| Restaurant (high-turnaround) | 832 | 3.3 | 16.26 | 54 | 46 | 29.0 | 24.7 |
| Restaurant (Steak House) | 831 | 2.9 | 7.66 | 70 | 30 | 15.5 | 6.7 |
| Sports Bar | 832 | 3.2 | 16.26 | 54 | 46 | 28.1 | 23.9 |
| Retail Merchandise | 810 | 16.0 | 4.80 | 50 | 50 | 38.4 | 38.4 |
| | | | | | | 111 | 180 |

TABLE 5 DIRECTION DISTRIBUTION

| *Direction* | *Entering* | | *Exiting* | |
|---|---|---|---|---|
| | *AM* | *PM* | *AM* | *PM* |
| Eastbound | 24 | 32 | 18 | 52 |
| Westbound | 36 | 33 | 27 | 54 |
| Northbound | 20 | 25 | 15 | 41 |
| Southbound | 16 | 21 | 13 | 33 |

### C. *Traffic Distribution Assumptions*

Traffic counts were taken at the intersection of Kekuanaoa Street and Manono Street. The project is located at Kekuanaoa Street and Mililani Street, one block away. The

location of the traffic counts was to get a better idea of the north-south traffic transiting the area. This intersection has left turn lanes for each left turn movement and is signalized. Therefore, the following assumptions are made:

1. Southbound traffic wishing to enter the project will do so by way of Mililani Street and not use the intersection of Kekuanaoa Street and Manono Street.
2. Eastbound and westbound traffic entering and exiting the project will do so by the intersection of Kekuanaoa Street and Mililani Street.
3. All traffic generated by the project will enter the project from Mililani Street.
4. Northbound traffic bound for the project will pass through the intersection of Kekuanaoa Street and Manono Street.
5. Traffic exiting the project northbound will use Mililani Street northbound.
6. Traffic exiting the project southbound will do so by way of Mililani Street to Kekuanaoa Street to Manono Street and then by Manono Street.
7. Existing traffic on Mililani Street was observed to be very light. Therefore, it is considered a negligible factor.
8. Traffic distribution entering and exiting the project is based upon the percentage of through traffic in each direction at the intersection of Kekuananoa Street and Manono Street.

TABLE 6 TURNING MOVEMENT DISTRIBUTION, INTERSECTION OF KEKUANAOA STREET AND MANONO STREET

| *Movement* | *Existing* | | *Kekuanaoa Street* | | *Manono Street* | |
|---|---|---|---|---|---|---|
| | | | *Future* | | *Future* | |
| | *AM* | *PM* | *AM* | *PM* | *AM* | *PM* |
| EBL | 93 | 137 | 93 | 137 | 25 | 33 |
| EBT | 307 | 421 | 325 | 473 | 409 | 581 |
| EBR | 11 | 25 | 24 | 58 | 1 | 1 |
| WBL | 19 | 97 | 19 | 97 | 1 | 1 |
| WBT | 469 | 435 | 505 | 468 | 599 | 581 |
| WBR | 19 | 42 | 24 | 42 | 1 | 59 |
| NBL | 63 | 63 | 83 | 88 | 1 | 1 |
| NBT | 253 | 332 | 259 | 332 | 3 | 3 |
| NBR | 49 | 54 | 49 | 54 | 1 | 1 |



| *Movement* | *Existing* | | *Kekuanaoa Street* | | *Manono Street* | |
|---|---|---|---|---|---|---|
| | | | *Future* | | *Future* | |
| | *AM* | *PM* | *AM* | *PM* | *AM* | *PM* |
| SBL | 72 | 106 | 72 | 106 | 32 | 86 |
| SBT | 213 | 264 | 213 | 264 | 3 | 3 |
| SBR | 69 | 85 | 69 | 85 | 28 | 55 |

TABLE 7 KEKUANAOA STREET AND MANONO STREET LEVEL OF SERVICE

| *Condition* | *Eastbound* | | | *Westbound* | | | *Northbound* | | | *Southbound* | | |
|---|---|---|---|---|---|---|---|---|---|---|---|---|
| | *L* | *T* | *R* | *L* | *T* | *R* | *L* | *T* | *R* | *L* | *T* | *R* |
| *AM* | | | | | | | | | | | | |
| Existing | C | C | C | C | F | F | F | F | F | F | F | F |
| Future | F | F | F | F | F | F | F | F | F | F | F | F |
| *PM* | | | | | | | | | | | | |
| Existing | F | F | F | F | F | F | C | F | F | F | F | F |
| Future | F | F | F | F | F | F | F | F | F | F | F | F |

TABLE 8 KEKUANAOA STREET AND MILILANI STREET LEVEL OF SERVICE

| *Condition* | *Eastbound* | | | *Westbound* | | | *Northbound* | | | *Southbound* | | |
|---|---|---|---|---|---|---|---|---|---|---|---|---|
| | *L* | *T* | *R* | *L* | *T* | *R* | *L* | *T* | *R* | *L* | *T* | *R* |
| *AM* | | | | | | | | | | | | |
| Future | A | A | A | A | A | A | C | C | C | C | C | C |
| *PM* | | | | | | | | | | | | |
| Future | A | A | A | A | A | A | D | D | D | F | F | F |

## VI. LEFT TURN ANALYSIS

The intersection of Kekuanaoa Street and Mililani Street was analyzed to see if a left turn lane eastbound was warranted. Using the analysis suggested by Kitzpatrick and Wolff submitted at the 2nd Urban Street Symposium sponsored by the Transportation Research

Board in July, 2003, a left turn lane is needed. This is based upon the balance of cost for the construction of a left turn lane against the benefits of reduced delay and accidents.

During the morning peak hour, the eastbound (advancing traffic) was found to be 411 vph while the westbound (opposing traffic) was found to be 601. This is a borderline situation. However, during the afternoon peak hour, the eastbound traffic was found to be 583 as was the westbound. This falls well within the warrant for a left turn lane. The following graphs show this relationship.

## VII. Conclusion and Recommendations

The project has some impact on the neighborhood. The intersection of Kekuananoa Street and Manono Street is already heavily impacted with the level of service of "C" for some of the movements in the AM. This changes to level of service "F" across the board during the PM peak hour.

The development of the facility generates sufficient traffic to change all movements to level of service "F". Right turn lanes at this intersection may deviate some of this problem making more right turn on red possible. This would be a question of whether or not enough right-of-way exists.

Due to the level of service at the intersection of Kekuananoa Street and Manono Street, it is necessary that t a left turn lane be constructed at the intersection of Kekuananoa Street and Mililani Street. This will alleviate any disruption of traffic flow eastbound on Kekuananoa Street. Also, it was noted that during the PM peak hour, traffic eastbound tended to back up west past Mililani Street. The left turn lane keeps traffic turning left separated from the flow of traffic eastbound on Kekuananoa Street.

Due to the traffic flow westbound on Kekuananoa Street, the entrance and exit for the property on Kekuananoa Street should be limited to right turn in and right turn out. There is not sufficient storage room along Kekuananoa Street to have a left turn lane at this entrance and at Mililani Street.



# Appendix A:

Vicinity Map
Tax Map Key

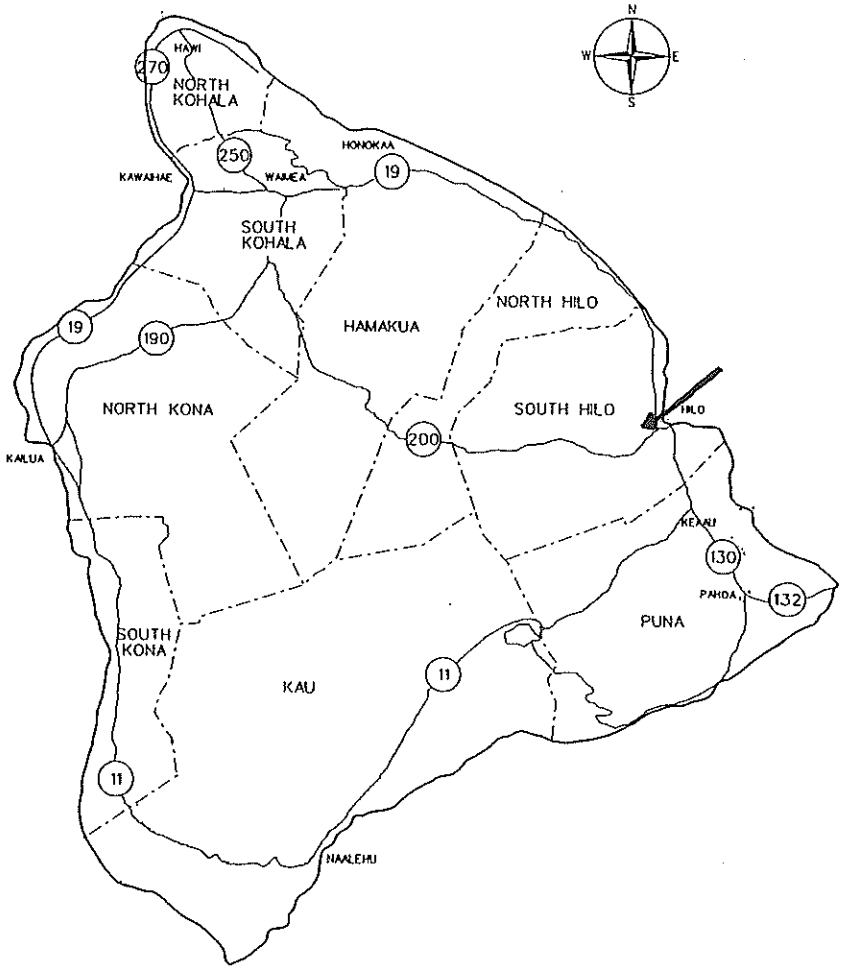


WITCHER ENGINEERING LLP

75-5751 Kuakini Hwy. Ste. 105
Kailua-Kona, Hawaii 96740
(808) 334-0322

Consulting Civil Engineers
Construction Managers

LOCATION MAP

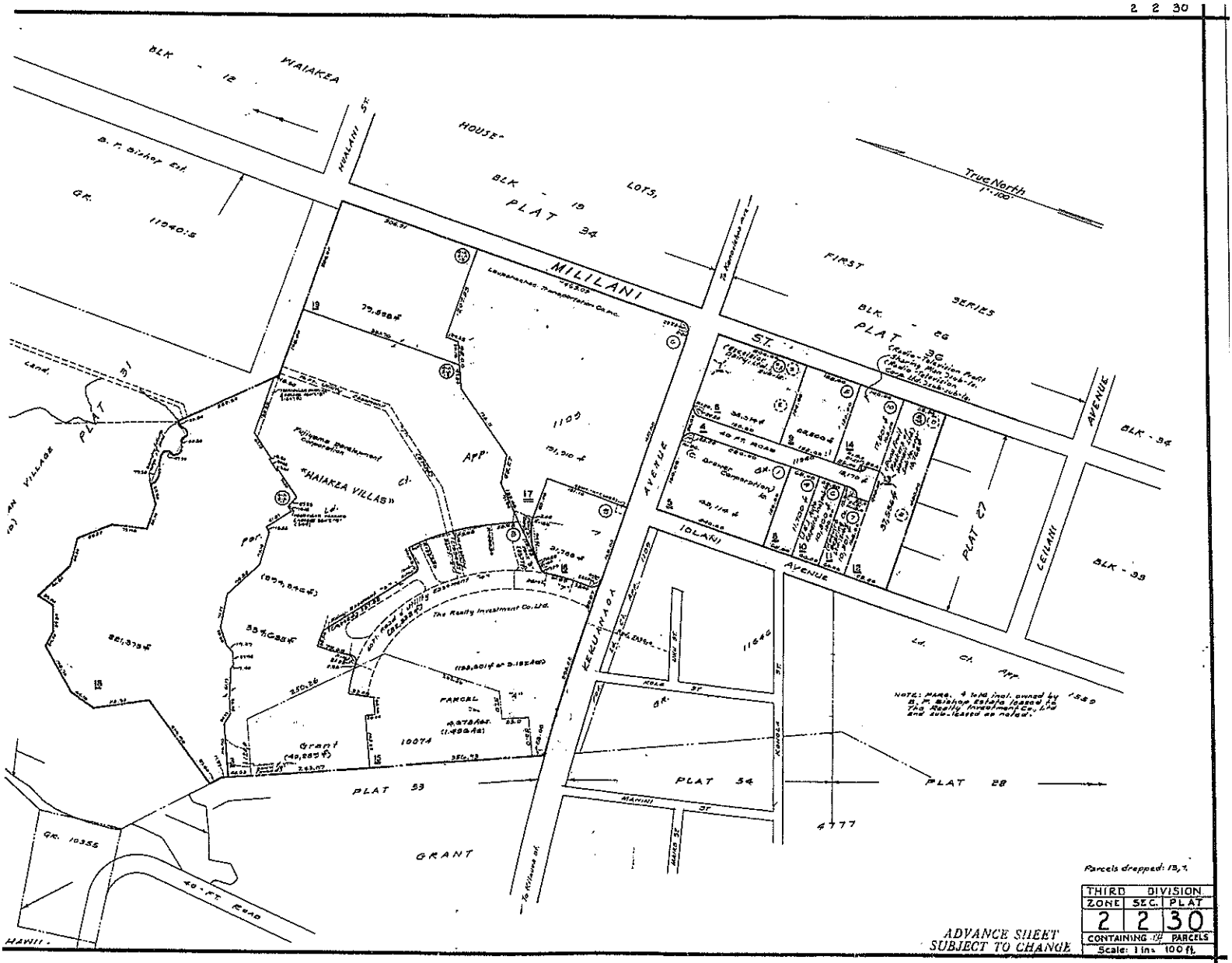


| THIRD | DIVISION | |
|---|---|---|
| ZONE | SEC. | PLAT |
| 2 | 2 | 30 |
| CONTAINING # PARCELS | | |
| Scale: 1 in. 100 ft. | | |

PRINTED

# Appendix B:

## Level of Service
## Present Conditions

HCS+: Signalized Intersections Release 5.2

Analyst: BEW
Agency: De Luz
Date: 3/6/2008
Period: AM peak Existing
Project ID: Hilo entertainment center, job # 560-01-08 kemaame
E/W St: Kekuanaoa St

Inter.: 4 way
Area Type: All other areas
Jurisd: Hawaii County
Year : 2008
N/S St: Manono St

SIGNALIZED INTERSECTION SUMMARY

| | Eastbound | | | Westbound | | | Northbound | | | Southbound | | |
|---|---|---|---|---|---|---|---|---|---|---|---|---|
| | L | T | R | L | T | R | L | T | R | L | T | R |
| No. Lanes | 1 | 1 | 0 | 1 | 1 | 0 | 1 | 1 | 0 | 1 | 1 | 0 |
| LGConfig | L | TR | | L | TR | | L | TR | | L | TR | |
| Volume | 93 | 307 | 11 | 19 | 469 | 24 | 63 | 259 | 49 | 72 | 213 | 69 |
| Lane Width | 12.0 | 12.0 | | 12.0 | 12.0 | | 12.0 | 12.0 | | 12.0 | 12.0 | |
| RTOR Vol | | | 0 | | | 0 | | | 0 | | | 0 |

Duration 1.00 Area Type: All other areas

Signal Operations

| Phase Combination | 1 | 2 | 3 | 4 | | | 5 | 6 | 7 | 8 |
|---|---|---|---|---|---|---|---|---|---|---|
| EB Left | p | | | | NB | Left | p | | | |
| Thru | | p | | | | Thru | | p | | |
| Right | | p | | | | Right | | p | | |
| Peds | | | | | | Peds | | | | |
| WB Left | | | p | | SB | Left | | | p | |
| Thru | | | | p | | Thru | | | | p |
| Right | | | | p | | Right | | | | p |
| Peds | | | | | | Peds | | | | |
| NB Right | | | | | EB | Right | | | | |
| SB Right | | | | | WB | Right | | | | |
| Green | 10.6 | 17.7 | 5.0 | 8.3 | | | 3.1 | 1.1 | 1.1 | 3.0 |
| Yellow | 1.0 | 1.0 | 1.0 | 1.0 | | | 1.0 | 1.0 | 1.0 | 1.0 |
| All Red | 1.0 | 1.0 | 1.0 | 1.0 | | | 1.0 | 1.0 | 1.0 | 1.0 |

Cycle Length: 65.9 secs

Intersection Performance Summary

| Appr/ Lane Grp | Lane Group Capacity | Adj Sat Flow Rate (s) | Ratios v/c | Ratios g/C | Lane Group Delay | Lane Group LOS | Approach Delay | Approach LOS |
|---|---|---|---|---|---|---|---|---|
| Eastbound | | | | | | | | |
| L | 290 | 1805 | 0.36 | 0.16 | 28.0 | C | | |
| TR | 508 | 1890 | 0.69 | 0.27 | 29.6 | C | 29.3 | C |
| Westbound | | | | | | | | |
| L | 137 | 1805 | 0.15 | 0.08 | 30.8 | C | | |
| TR | 238 | 1886 | 2.30 | 0.13 | 2387 | F | 2300 | F |
| Northbound | | | | | | | | |
| L | 85 | 1805 | 0.82 | 0.05 | 110.2 | F | | |
| TR | 31 | 1855 | | 0.02 | | | | |
| Southbound | | | | | | | | |
| L | 30 | 1805 | 2.67 | 0.02 | 3126 | F | | |
| TR | 83 | 1830 | 3.78 | 0.05 | 5070 | F | 4675 | F |

Intersection Delay = (sec/veh) Intersection LOS =

HCS+: Signalized Intersections Release 5.2

Phone: Fax:
E-Mail:

## OPERATIONAL ANALYSIS

Analyst: BEW
Agency/Co.: De Luz
Date Performed: 3/6/2008
Analysis Time Period: AM peak Existing
Intersection: 4 way
Area Type: All other areas
Jurisdiction: Hawaii County
Analysis Year: 2008
Project ID: Hilo entertainment center, job # 560-01-08 kemaame
E/W St: Kekuanaoa St N/S St: Manono St

## VOLUME DATA

| | Eastbound | | | Westbound | | | Northbound | | | Southbound | | |
|---|---|---|---|---|---|---|---|---|---|---|---|---|
| | L | T | R | L | T | R | L | T | R | L | T | R |
| Volume | 93 | 307 | 11 | 19 | 469 | 24 | 63 | 259 | 49 | 72 | 213 | 69 |
| % Heavy Veh | 0 | 0 | 0 | 0 | 0 | 0 | 0 | 0 | 0 | 0 | 0 | 0 |
| PHF | 0.90 | 0.90 | 0.90 | 0.90 | 0.90 | 0.90 | 0.90 | 0.90 | 0.90 | 0.90 | 0.90 | 0.90 |
| PK 15 Vol | 26 | 85 | 3 | 5 | 130 | 7 | 18 | 72 | 14 | 20 | 59 | 19 |
| Hi Ln Vol | | | | | | | | | | | | |
| % Grade | | 0 | | | 0 | | | 0 | | | 0 | |
| Ideal Sat | 1900 | 1900 | | 1900 | 1900 | | 1900 | 1900 | | 1900 | 1900 | |
| ParkExist | | | | | | | | | | | | |
| NumPark | | | | | | | | | | | | |
| No. Lanes | 1 | 1 | 0 | 1 | 1 | 0 | 1 | 1 | 0 | 1 | 1 | 0 |
| LGConfig | L | TR | | L | TR | | L | TR | | L | TR | |
| Lane Width | 12.0 | 12.0 | | 12.0 | 12.0 | | 12.0 | 12.0 | | 12.0 | 12.0 | |
| RTOR Vol | | | 0 | | | 0 | | | 0 | | | 0 |
| Adj Flow | 103 | 353 | | 21 | 548 | | 70 | 342 | | 80 | 314 | |
| %InSharedLn | | | | | | | | | | | | |
| Prop LTs | | 0.000 | | | 0.000 | | | 0.000 | | | 0.000 | |
| Prop RTs | | 0.034 | | | 0.049 | | | 0.158 | | | 0.245 | |
| Peds Bikes | | 0 | | | 0 | | | 0 | | | 0 | |
| Buses | 0 | 0 | | 0 | 0 | | 0 | 0 | | 0 | 0 | |
| %InProtPhase | | | | | | | | | | | | |

Duration 1.00 Area Type: All other areas

## OPERATING PARAMETERS

| | Eastbound | | | Westbound | | | Northbound | | | Southbound | | |
|---|---|---|---|---|---|---|---|---|---|---|---|---|
| | L | T | R | L | T | R | L | T | R | L | T | R |
| Init Unmet | 0.0 | 0.0 | | 0.0 | 0.0 | | 0.0 | 0.0 | | 0.0 | 0.0 | |
| Arriv. Type | 3 | 3 | | 3 | 3 | | 3 | 3 | | 3 | 3 | |
| Unit Ext. | 3.0 | 3.0 | | 3.0 | 3.0 | | 3.0 | 3.0 | | 3.0 | 3.0 | |
| I Factor | | 1.000 | | | 1.000 | | | 1.000 | | | 1.000 | |
| Lost Time | 2.0 | 2.0 | | 2.0 | 2.0 | | 2.0 | 2.0 | | 2.0 | 2.0 | |
| Ext of g | 2.0 | 2.0 | | 2.0 | 2.0 | | 2.0 | 2.0 | | 2.0 | 2.0 | |
| Ped Min g | | 3.2 | | | 3.2 | | | 3.2 | | | 3.2 | |

## PHASE DATA

| Phase Combination | | 1 | 2 | 3 | 4 | | | 5 | 6 | 7 | 8 |
|---|---|---|---|---|---|---|---|---|---|---|---|
| EB | Left | P | | | | NB | Left | P | | | |
| | Thru | | P | | | | Thru | | P | | |
| | Right | | P | | | | Right | | P | | |
| | Peds | | | | | | Peds | | | | |
| WB | Left | | | P | | SB | Left | | | P | |
| | Thru | | | | P | | Thru | | | | P |
| | Right | | | | P | | Right | | | | P |
| | Peds | | | | | | Peds | | | | |
| NB | Right | | | | | EB | Right | | | | |
| SB | Right | | | | | WB | Right | | | | |
| Green | | 10.6 | 17.7 | 5.0 | 8.3 | | | 3.1 | 1.1 | 1.1 | 3.0 |
| Yellow | | 1.0 | 1.0 | 1.0 | 1.0 | | | 1.0 | 1.0 | 1.0 | 1.0 |
| All Red | | 1.0 | 1.0 | 1.0 | 1.0 | | | 1.0 | 1.0 | 1.0 | 1.0 |

Cycle Length: 65.9 secs

## VOLUME ADJUSTMENT AND SATURATION FLOW WORKSHEET

Volume Adjustment

| | Eastbound | | | Westbound | | | Northbound | | | Southbound | | |
|---|---|---|---|---|---|---|---|---|---|---|---|---|
| | L | T | R | L | T | R | L | T | R | L | T | R |
| Volume, V | 93 | 307 | 11 | 19 | 469 | 24 | 63 | 259 | 49 | 72 | 213 | 69 |
| PHF | 0.90 | 0.90 | 0.90 | 0.90 | 0.90 | 0.90 | 0.90 | 0.90 | 0.90 | 0.90 | 0.90 | 0.90 |
| Adj flow | 103 | 341 | 12 | 21 | 521 | 27 | 70 | 288 | 54 | 80 | 237 | 77 |
| No. Lanes | 1 | 1 | 0 | 1 | 1 | 0 | 1 | 1 | 0 | 1 | 1 | 0 |
| Lane group | L | TR | | L | TR | | L | TR | | L | TR | |
| Adj flow | 103 | 353 | | 21 | 548 | | 70 | 342 | | 80 | 314 | |
| Prop LTs | | 0.000 | | | 0.000 | | | 0.000 | | | 0.000 | |
| Prop RTs | | 0.034 | | | 0.049 | | | 0.158 | | | 0.245 | |

Saturation Flow Rate (see Exhibit 16-7 to determine the adjustment factors)

| | Eastbound | | | Westbound | | | Northbound | | | Southbound | | |
|---|---|---|---|---|---|---|---|---|---|---|---|---|
| LG | L | TR | | L | TR | | L | TR | | L | TR | |
| So | 1900 | 1900 | | 1900 | 1900 | | 1900 | 1900 | | 1900 | 1900 | |
| Lanes | 1 | 1 | 0 | 1 | 1 | 0 | 1 | 1 | 0 | 1 | 1 | 0 |
| fW | 1.000 | 1.000 | | 1.000 | 1.000 | | 1.000 | 1.000 | | 1.000 | 1.000 | |
| fHV | 1.000 | 1.000 | | 1.000 | 1.000 | | 1.000 | 1.000 | | 1.000 | 1.000 | |
| fG | 1.000 | 1.000 | | 1.000 | 1.000 | | 1.000 | 1.000 | | 1.000 | 1.000 | |
| fP | 1.000 | 1.000 | | 1.000 | 1.000 | | 1.000 | 1.000 | | 1.000 | 1.000 | |
| fBB | 1.000 | 1.000 | | 1.000 | 1.000 | | 1.000 | 1.000 | | 1.000 | 1.000 | |
| fA | 1.000 | 1.000 | | 1.000 | 1.000 | | 1.000 | 1.000 | | 1.000 | 1.000 | |
| fLU | 1.000 | 1.000 | | 1.000 | 1.000 | | 1.000 | 1.000 | | 1.000 | 1.000 | |
| fRT | | 0.995 | | | 0.993 | | | 0.976 | | | 0.963 | |
| fLT | 0.950 | 1.000 | | 0.950 | 1.000 | | 0.950 | 1.000 | | 0.950 | 1.000 | |
| Sec. | | | | | | | | | | | | |
| fLpb | 1.000 | 1.000 | | 1.000 | 1.000 | | 1.000 | 1.000 | | 1.000 | 1.000 | |
| fRpb | | 1.000 | | | 1.000 | | | 1.000 | | | 1.000 | |
| S | 1805 | 1890 | | 1805 | 1886 | | 1805 | 1855 | | 1805 | 1830 | |
| Sec. | | | | | | | | | | | | |

## CAPACITY AND LOS WORKSHEET

Capacity Analysis and Lane Group Capacity

| Appr/ Mvmt | Lane Group | Adj Flow Rate (v) | Adj Sat Flow Rate (s) | Flow Ratio (v/s) | Green Ratio (g/C) | --Lane Group-- Capacity (c) | v/c Ratio |
|---|---|---|---|---|---|---|---|
| Eastbound | | | | | | | |
| Prot | | | | | | | |
| Perm | | | | | | | |
| Left | L | 103 | 1805 | # 0.06 | 0.16 | 290 | 0.36 |
| Prot | | | | | | | |
| Perm | | | | | | | |
| Thru | TR | 353 | 1890 | # 0.19 | 0.27 | 508 | 0.69 |
| Right | | | | | | | |
| Westbound | | | | | | | |
| Prot | | | | | | | |
| Perm | | | | | | | |
| Left | L | 21 | 1805 | # 0.01 | 0.08 | 137 | 0.15 |
| Prot | | | | | | | |
| Perm | | | | | | | |
| Thru | TR | 548 | 1886 | # 0.29 | 0.13 | 238 | 2.30 |
| Right | | | | | | | |
| Northbound | | | | | | | |
| Prot | | | | | | | |
| Perm | | | | | | | |
| Left | L | 70 | 1805 | # 0.04 | 0.05 | 85 | 0.82 |
| Prot | | | | | | | |
| Perm | | | | | | | |
| Thru | TR | 342 | 1855 | # 0.18 | 0.02 | 31 | |
| Right | | | | | | | |
| Southbound | | | | | | | |
| Prot | | | | | | | |
| Perm | | | | | | | |
| Left | L | 80 | 1805 | # 0.04 | 0.02 | 30 | 2.67 |
| Prot | | | | | | | |
| Perm | | | | | | | |
| Thru | TR | 314 | 1830 | # 0.17 | 0.05 | 83 | 3.78 |
| Right | | | | | | | |

Sum of flow ratios for critical lane groups, Yc = Sum (v/s) = 0.99
Total lost time per cycle, L = 14.00 sec
Critical flow rate to capacity ratio, Xc = (Yc)(C)/(C-L) = 1.25

Control Delay and LOS Determination

| Appr/ Lane Grp | Ratios v/c | Ratios g/C | Unf Del d1 | Prog Adj Fact | Lane Grp Cap | Incremental Factor k | Incremental Del d2 | Res Del d3 | Lane Group Delay | Lane Group LOS | Approach Delay | Approach LOS |
|---|---|---|---|---|---|---|---|---|---|---|---|---|
| Eastbound | | | | | | | | | | | | |
| L | 0.36 | 0.16 | 24.6 | 1.000 | 290 | 0.50 | 3.4 | 0.0 | 28.0 | C | | |
| TR | 0.69 | 0.27 | 21.7 | 1.000 | 508 | 0.50 | 8.0 | 0.0 | 29.6 | C | 29.3 | C |
| Westbound | | | | | | | | | | | | |
| L | 0.15 | 0.08 | 28.5 | 1.000 | 137 | 0.50 | 2.4 | 0.0 | 30.8 | C | | |
| TR | 2.30 | 0.13 | 28.8 | 1.000 | 238 | 0.50 | 2358 | 0.0 | 2387 | F | 2300 | F |
| Northbound | | | | | | | | | | | | |
| L | 0.82 | 0.05 | 31.1 | 1.000 | 85 | 0.50 | 79.1 | 0.0 | 110.2 | F | | |
| TR | | 0.02 | | 1.000 | 31 | 0.50 | | 0.0 | | | | |
| Southbound | | | | | | | | | | | | |
| L | 2.67 | 0.02 | 32.4 | 1.000 | 30 | 0.50 | 3093 | 0.0 | 3126 | F | | |
| TR | 3.78 | 0.05 | 31.5 | 1.000 | 83 | 0.50 | 5039 | 0.0 | 5070 | F | 4675 | F |

Intersection delay = (sec/veh) Intersection LOS =

SUPPLEMENTAL PERMITTED LT WORKSHEET
for exclusive lefts

Input

| | EB | WB | NB | SB |
|---|---|---|---|---|
| Opposed by Single(S) or Multiple(M) lane approach | | | | |
| Cycle length, C 65.9 sec | | | | |
| Total actual green time for LT lane group, G (s) | | | | |
| Effective permitted green time for LT lane group, g(s) | | | | |
| Opposing effective green time, go (s) | | | | |
| Number of lanes in LT lane group, N | | | | |
| Number of lanes in opposing approach, No | | | | |
| Adjusted LT flow rate, VLT (veh/h) | | | | |
| Proportion of LT in LT lane group, PLT | | | | |
| Proportion of LT in opposing flow, PLTo | | | | |
| Adjusted opposing flow rate, Vo (veh/h) | | | | |
| Lost time for LT lane group, tL | | | | |
| Computation | | | | |
| LT volume per cycle, LTC=VLTC/3600 | | | | |
| Opposing lane util. factor, fLUo | 1.000 | 1.000 | 1.000 | 1.000 |
| Opposing flow, Volc=VoC/[3600(No)fLUo] (veh/ln/cyc) | | | | |
| gf=G[exp(- a * (LTC ** b)]-tl, gf<=g | | | | |
| Opposing platoon ratio, Rpo (refer Exhibit 16-11) | | | | |
| Opposing Queue Ratio, qro=Max[1-Rpo(go/C),0] | | | | |
| gq, (see Exhibit C16-4,5,6,7,8) | | | | |
| gu=g-gq if gq>=gf, or = g-gf if gq<gf | | | | |
| n=Max(gq-gf)/2,0) | | | | |
| PTHo=1-PLTo | | | | |
| PL*=PLT[1+(N-1)g/(gf+gu/EL1+4.24)] | | | | |
| EL1 (refer to Exhibit C16-3) | | | | |
| EL2=Max((1-Ptho**n)/Plto, 1.0) | | | | |
| fmin=2(1+PL)/g or fmin=2(1+Pl)/g | | | | |
| gdiff=max(gq-gf,0) | | | | |
| fm=[gf/g]+[gu/g]/[1+PL(EL1-1)], (min=fmin;max=1.00) | | | | |
| flt=fm=[gf/g]+[gu/g]/[1+PL(EL1-1)]+[gdiff/g]/[1+PL(EL2-1)],(fmin<=fm<=1.00) | | | | |
| or flt=[fm+0.91(N-1)]/N** | | | | |
| Left-turn adjustment, fLT | | | | |

For special case of single-lane approach opposed by multilane approach, see text.
* If Pl>=1 for shared left-turn lanes with N>1, then assume de-facto left-turn lane and redo calculations.
** For permitted left-turns with multiple exclusive left-turn lanes, flt=fm.
For special case of multilane approach opposed by single-lane approach or when gf>gq, see text.

SUPPLEMENTAL PERMITTED LT WORKSHEET
for shared lefts

Input

| | EB | WB | NB | SB |
|---|---|---|---|---|
| Opposed by Single(S) or Multiple(M) lane approach | | | | |
| Cycle length, C 65.9 sec | | | | |
| Total actual green time for LT lane group, G (s) | | | | |
| Effective permitted green time for LT lane group, g(s) | | | | |
| Opposing effective green time, go (s) | | | | |
| Number of lanes in LT lane group, N | | | | |

Number of lanes in opposing approach, No
Adjusted LT flow rate, VLT (veh/h)
Proportion of LT in LT lane group, PLT 0.000 0.000 0.000 0.000
Proportion of LT in opposing flow, PLTo
Adjusted opposing flow rate, Vo (veh/h)
Lost time for LT lane group, tL
Computation
LT volume per cycle, LTC=VLTC/3600
Opposing lane util. factor, fLUo 1.000 1.000 1.000 1.000
Opposing flow, Volc=VoC/[3600(No)fLUo] (veh/ln/cyc)
gf=G[exp(- a * (LTC ** b)]-tl, gf<=g
Opposing platoon ratio, Rpo (refer Exhibit 16-11)
Opposing Queue Ratio, qro=Max[1-Rpo(go/C),0]
gq, (see Exhibit C16-4,5,6,7,8)
gu=g-gq if gq>=gf, or = g-gf if gq<gf
n=Max(gq-gf)/2,0)
PTHo=1-PLTo
PL*=PLT[1+(N-1)g/(gf+gu/EL1+4.24)]
EL1 (refer to Exhibit C16-3)
EL2=Max((1-Ptho**n)/Plto, 1.0)
fmin=2(1+PL)/g or fmin=2(1+Pl)/g
gdiff=max(gq-gf,0)
fm=[gf/g]+[gu/g]/[1+PL(EL1-1)], (min=fmin;max=1.00)
flt=fm=[gf/g]+[gu/g]/[1+PL(EL1-1)]+[gdiff/g]/[1+PL(EL2-1)],(fmin<=fm<=1.00)
or flt=[fm+0.91(N-1)]/N**
Left-turn adjustment, fLT

For special case of single-lane approach opposed by multilane approach, see text.
* If Pl>=1 for shared left-turn lanes with N>1, then assume de-facto left-turn lane and redo calculations.
** For permitted left-turns with multiple exclusive left-turn lanes, flt=fm.
For special case of multilane approach opposed by single-lane approach or when gf>gq, see text.

## SUPPLEMENTAL PEDESTRIAN-BICYCLE EFFECTS WORKSHEET

Permitted Left Turns
EB WB NB SB
Effective pedestrian green time, gp (s)
Conflicting pedestrian volume, Vped (p/h)
Pedestrian flow rate, Vpedg (p/h)
OCCpedg
Opposing queue clearing green, gq (s)
Eff. ped. green consumed by opp. veh. queue, gq/gp
OCCpedu
Opposing flow rate, Vo (veh/h)
OCCr
Number of cross-street receiving lanes, Nrec
Number of turning lanes, Nturn
ApbT
Proportion of left turns, PLT
Proportion of left turns using protected phase, PLTA
Left-turn adjustment, fLpb
Permitted Right Turns
Effective pedestrian green time, gp (s)
Conflicting pedestrian volume, Vped (p/h)
Conflicting bicycle volume, Vbic (bicycles/h)
Vpedg
OCCpedg
Effective green, g (s)
Vbicg
OCCbicg
OCCr
Number of cross-street receiving lanes, Nrec
Number of turning lanes, Nturn
ApbT
Proportion right-turns, PRT
Proportion right-turns using protected phase, PRTA
Right turn adjustment, fRpb

## SUPPLEMENTAL UNIFORM DELAY WORKSHEET

EBLT WBLT NBLT SBLT
Cycle length, C 65.9 sec
Adj. LT vol from Vol Adjustment Worksheet, v
v/c ratio from Capacity Worksheet, X
Protected phase effective green interval, g (s)
Opposing queue effective green interval, gq
Unopposed green interval, gu
Red time r=(C-g-gq-gu)
Arrival rate, qa=v/(3600(max[X,1.0]))
Protected ph. departure rate, Sp=s/3600
Permitted ph. departure rate, Ss=s(gq+gu)/(gu*3600)
XPerm
XProt
Case
Queue at beginning of green arrow, Qa
Queue at beginning of unsaturated green, Qu
Residual queue, Qr
Uniform Delay, d1

## DELAY/LOS WORKSHEET WITH INITIAL QUEUE

| Appr/ Lane Group | Initial Unmet Demand Q veh | Dur. Unmet Demand t hrs. | Uniform Delay Unadj. ds | Uniform Delay Adj. d1 sec | Initial Queue Param. u | Final Unmet Demand Q veh | Initial Queue Delay d3 sec | Lane Group Delay d sec |
|---|---|---|---|---|---|---|---|---|
| Eastbound | | | | | | | | |
| L | 0.0 | 0.00 | 27.6 | 24.6 | 0.00 | 0.0 | 0.0 | 28.0 |
| TR | 0.0 | 0.00 | 24.1 | 21.7 | 0.00 | 0.0 | 0.0 | 29.6 |
| | 0.0 | | | | | | 0.0 | |
| Westbound | | | | | | | | |
| L | 0.0 | 0.00 | 30.5 | 28.5 | 0.00 | 0.0 | 0.0 | 30.8 |
| TR | 0.0 | 0.00 | 28.8 | 28.8 | 0.00 | 310.0 | 0.0 | 2387 |
| | 0.0 | | | | | | 0.0 | |
| Northbound | | | | | | | | |
| L | 0.0 | 0.00 | 31.4 | 31.1 | 0.00 | 0.0 | 0.0 | 110.2 |
| TR | 0.0 | 0.00 | 32.4 | | | | 0.0 | |
| | 0.0 | | | | | | 0.0 | |
| Southbound | | | | | | | | |
| L | 0.0 | 0.00 | 32.4 | 32.4 | 0.00 | 50.0 | 0.0 | 3126 |
| TR | 0.0 | 0.00 | 31.5 | 31.5 | 0.00 | 231.0 | 0.0 | 5070 |
| | 0.0 | | | | | | 0.0 | |

Intersection Delay sec/veh Intersection LOS

## BACK OF QUEUE WORKSHEET

| | Eastbound | | | Westbound | | | Northbound | | | Southbound | | |
|---|---|---|---|---|---|---|---|---|---|---|---|---|
| LaneGroup | L | TR | | L | TR | | L | TR | | L | TR | |
| Init Queue | 0.0 | 0.0 | | 0.0 | 0.0 | | 0.0 | 0.0 | | 0.0 | 0.0 | |
| Flow Rate | 103 | 353 | | 21 | 548 | | 70 | 342 | | 80 | 314 | |
| So | 1900 | 1900 | | 1900 | 1900 | | 1900 | 1900 | | 1900 | 1900 | |
| No.Lanes | 1 | 1 | 0 | 1 | 1 | 0 | 1 | 1 | 0 | 1 | 1 | 0 |
| SL | 1805 | 1890 | | 1805 | 1886 | | 1805 | 1855 | | 1805 | 1830 | |
| LnCapacity | 290 | 508 | | 137 | 238 | | 85 | 31 | | 30 | 83 | |
| Flow Ratio | 0.1 | 0.2 | | 0.0 | 0.3 | | 0.0 | 0.2 | | 0.0 | 0.2 | |
| v/c Ratio | 0.36 | 0.69 | | 0.15 | 2.30 | | 0.82 | 11.03 | | | 2.67 | 3.78 |
| Grn Ratio | 0.16 | 0.27 | | 0.08 | 0.13 | | 0.05 | 0.02 | | 0.02 | 0.05 | |
| I Factor | | 1.000 | | | 1.000 | | | 1.000 | | | 1.000 | |
| AT or PVG | 3 | 3 | | 3 | 3 | | 3 | 3 | | 3 | 3 | |
| Pltn Ratio | 1.00 | 1.00 | | 1.00 | 1.00 | | 1.00 | 1.00 | | 1.00 | 1.00 | |
| PF2 | 1.00 | 1.00 | | 1.00 | 1.00 | | 1.00 | 1.00 | | 1.00 | 1.00 | |
| Q1 | 1.7 | 5.8 | | 0.4 | 10.0 | | 1.3 | 6.3 | | 1.5 | 5.7 | |
| kB | 0.4 | 0.6 | | 0.2 | 0.3 | | 0.2 | 0.1 | | 0.1 | 0.2 | |
| Q2 | 0.2 | 1.3 | | 0.0 | 155.6 | | | 0.7 | 155.6 | | 25.1 | 115.7 |
| Q Average | 1.9 | 7.1 | | 0.4 | 165.6 | | | 2.0 | 161.8 | | 26.6 | 121.5 |
| Q Spacing | 25.0 | 25.0 | | 25.0 | 25.0 | | 25.0 | 25.0 | | 25.0 | 25.0 | |
| Q Storage | 0 | 0 | | 0 | 0 | | 0 | 0 | | 0 | 0 | |
| Q S Ratio | | | | | | | | | | | | |
| 70th Percentile Output: | | | | | | | | | | | | |
| fB% | 1.3 | 1.2 | | 1.3 | 1.2 | | 1.3 | 1.2 | | 1.2 | 1.2 | |
| BOQ | 2.4 | 8.7 | | 0.5 | 199 | | 2.5 | 194 | | 31.9 | 146 | |
| QSRatio | | | | | | | | | | | | |
| 85th Percentile Output: | | | | | | | | | | | | |
| fB% | 1.6 | 1.5 | | 1.7 | 1.4 | | 1.6 | 1.4 | | 1.4 | 1.4 | |
| BOQ | 3.0 | 10.4 | | 0.7 | 232 | | 3.2 | 227 | | 37.3 | 170 | |
| QSRatio | | | | | | | | | | | | |
| 90th Percentile Output: | | | | | | | | | | | | |
| fB% | 1.8 | 1.6 | | 2.0 | 1.5 | | 1.8 | 1.5 | | 1.5 | 1.5 | |
| BOQ | 3.5 | 11.5 | | 0.8 | 248 | | 3.6 | 243 | | 40.0 | 182 | |
| QSRatio | | | | | | | | | | | | |
| 95th Percentile Output: | | | | | | | | | | | | |
| fB% | 2.3 | 1.8 | | 2.5 | 1.6 | | 2.3 | 1.6 | | 1.6 | 1.6 | |
| BOQ | 4.3 | 13.1 | | 1.0 | 265 | | 4.5 | 259 | | 42.7 | 194 | |
| QSRatio | | | | | | | | | | | | |
| 98th Percentile Output: | | | | | | | | | | | | |
| fB% | 2.7 | 2.1 | | 3.1 | 1.7 | | 2.7 | 1.7 | | 1.7 | 1.7 | |
| BOQ | 5.2 | 14.6 | | 1.2 | 282 | | 5.3 | 275 | | 45.4 | 206 | |
| QSRatio | | | | | | | | | | | | |

ERROR MESSAGES

No errors to report.

HCS+: Signalized Intersections Release 5.2

Analyst: BEW
Agency: De Luz
Date: 3/6/2008
Period: PM peak existing
Project ID: Hilo entertainment center, job # 560-01-08, kemapme
E/W St: Kekuanaoa St

Inter.: 4 way
Area Type: All other areas
Jurisd: Hawaii County
Year : 2008
N/S St: Manono St

SIGNALIZED INTERSECTION SUMMARY

| | Eastbound | | | Westbound | | | Northbound | | | Southbound | | |
|---|---|---|---|---|---|---|---|---|---|---|---|---|
| | L | T | R | L | T | R | L | T | R | L | T | R |
| No. Lanes | 1 | 1 | 0 | 1 | 1 | 0 | 1 | 1 | 0 | 1 | 1 | 0 |
| LGConfig | L | TR | | L | TR | | L | TR | | L | TR | |
| Volume | 137 | 421 | 25 | 97 | 435 | 42 | 63 | 332 | 54 | 106 | 264 | 85 |
| Lane Width | 12.0 | 12.0 | | 12.0 | 12.0 | | 12.0 | 12.0 | | 12.0 | 12.0 | |
| RTOR Vol | | | 0 | | | 0 | | | 0 | | | 0 |

Duration 1.00 Area Type: All other areas

Signal Operations

| Phase Combination | 1 | 2 | 3 | 4 | | | 5 | 6 | 7 | 8 |
|---|---|---|---|---|---|---|---|---|---|---|
| EB Left | P | | | | NB | Left | P | | | |
| Thru | | P | | | | Thru | | P | | |
| Right | | P | | | | Right | | P | | |
| Peds | | | | | | Peds | | | | |
| WB Left | | | P | | SB | Left | | | P | |
| Thru | | | | P | | Thru | | | | P |
| Right | | | | P | | Right | | | | P |
| Peds | | | | | | Peds | | | | |
| NB Right | | | | | EB | Right | | | | |
| SB Right | | | | | WB | Right | | | | |
| Green | 7.1 | 19.2 | 3.1 | 10.9 | | | 8.4 | 8.3 | 1.8 | 7.2 |
| Yellow | 1.0 | 1.0 | 1.0 | 1.0 | | | 1.0 | 1.0 | 1.0 | 0.0 |
| All Red | 0.0 | 0.0 | 0.0 | 0.0 | | | 0.0 | 0.0 | 0.0 | 0.0 |

Cycle Length: 73.0 secs

Intersection Performance Summary

| Appr/ Lane Grp | Lane Group Capacity | Adj Sat Flow Rate (s) | Ratios v/c | Ratios g/C | Lane Group Delay | Lane Group LOS | Approach Delay | Approach LOS |
|---|---|---|---|---|---|---|---|---|
| Eastbound | | | | | | | | |
| L | 176 | 1805 | 0.86 | 0.10 | 85.7 | F | | |
| TR | 496 | 1884 | 1.00 | 0.26 | 107.7 | F | 102.6 | F |
| Westbound | | | | | | | | |
| L | 77 | 1805 | 1.40 | 0.04 | 833.5 | F | | |
| TR | 280 | 1875 | 1.89 | 0.15 | 1652 | F | 1513 | F |
| Northbound | | | | | | | | |
| L | 208 | 1805 | 0.34 | 0.12 | 34.1 | C | | |
| TR | 211 | 1860 | 2.03 | 0.11 | 1909 | F | 1646 | F |
| Southbound | | | | | | | | |
| L | 45 | 1805 | 2.62 | 0.02 | 3019 | F | | |
| TR | 181 | 1831 | 2.14 | 0.10 | 2100 | F | 2315 | F |

Intersection Delay = 1320 (sec/veh) Intersection LOS = F

HCS+: Signalized Intersections Release 5.2

Phone: Fax:
E-Mail:

## OPERATIONAL ANALYSIS

Analyst: BEW
Agency/Co.: De Luz
Date Performed: 3/6/2008
Analysis Time Period: PM peak existing
Intersection: 4 way
Area Type: All other areas
Jurisdiction: Hawaii County
Analysis Year: 2008
Project ID: Hilo entertainment center, job # 560-01-08, kemapme
E/W St: Kekuanaoa St N/S St: Manono St

## VOLUME DATA

| | Eastbound | | | Westbound | | | Northbound | | | Southbound | | |
|---|---|---|---|---|---|---|---|---|---|---|---|---|
| | L | T | R | L | T | R | L | T | R | L | T | R |
| Volume | 137 | 421 | 25 | 97 | 435 | 42 | 63 | 332 | 54 | 106 | 264 | 85 |
| % Heavy Veh | 0 | 0 | 0 | 0 | 0 | 0 | 0 | 0 | 0 | 0 | 0 | 0 |
| PHF | 0.90 | 0.90 | 0.90 | 0.90 | 0.90 | 0.90 | 0.90 | 0.90 | 0.90 | 0.90 | 0.90 | 0.90 |
| PK 15 Vol | 38 | 117 | 7 | 27 | 121 | 12 | 18 | 92 | 15 | 29 | 73 | 24 |
| Hi Ln Vol | | | | | | | | | | | | |
| % Grade | | 0 | | | 0 | | | 0 | | | 0 | |
| Ideal Sat | 1900 | 1900 | | 1900 | 1900 | | 1900 | 1900 | | 1900 | 1900 | |
| ParkExist | | | | | | | | | | | | |
| NumPark | | | | | | | | | | | | |
| No. Lanes | 1 | 1 | 0 | 1 | 1 | 0 | 1 | 1 | 0 | 1 | 1 | 0 |
| LGConfig | L | TR | | L | TR | | L | TR | | L | TR | |
| Lane Width | 12.0 | 12.0 | | 12.0 | 12.0 | | 12.0 | 12.0 | | 12.0 | 12.0 | |
| RTOR Vol | | | 0 | | | 0 | | | 0 | | | 0 |
| Adj Flow | 152 | 496 | | 108 | 530 | | 70 | 429 | | 118 | 387 | |
| %InSharedLn | | | | | | | | | | | | |
| Prop LTs | | 0.000 | | | 0.000 | | | 0.000 | | | 0.000 | |
| Prop RTs | | 0.056 | | | 0.089 | | | 0.140 | | | 0.243 | |
| Peds Bikes | | 0 | | | 0 | | | 0 | | | 0 | |
| Buses | 0 | 0 | | 0 | 0 | | 0 | 0 | | 0 | 0 | |
| %InProtPhase | | | | | | | | | | | | |

Duration 1.00 Area Type: All other areas

## OPERATING PARAMETERS

| | Eastbound | | | Westbound | | | Northbound | | | Southbound | | |
|---|---|---|---|---|---|---|---|---|---|---|---|---|
| | L | T | R | L | T | R | L | T | R | L | T | R |
| Init Unmet | 0.0 | 0.0 | | 0.0 | 0.0 | | 0.0 | 0.0 | | 0.0 | 0.0 | |
| Arriv. Type | 3 | 3 | | 3 | 3 | | 3 | 3 | | 3 | 3 | |
| Unit Ext. | 3.0 | 3.0 | | 3.0 | 3.0 | | 3.0 | 3.0 | | 3.0 | 3.0 | |
| I Factor | | 1.000 | | | 1.000 | | | 1.000 | | | 1.000 | |
| Lost Time | 2.0 | 2.0 | | 2.0 | 2.0 | | 2.0 | 2.0 | | 2.0 | 2.0 | |
| Ext of g | 2.0 | 2.0 | | 2.0 | 2.0 | | 2.0 | 2.0 | | 2.0 | 2.0 | |
| Ped Min g | | 3.2 | | | 3.2 | | | 3.2 | | | 3.2 | |

## PHASE DATA

| Phase Combination | 1 | 2 | 3 | 4 | | 5 | 6 | 7 | 8 |
|---|---|---|---|---|---|---|---|---|---|
| EB Left | P | | | | NB Left | P | | | |
| Thru | | P | | | Thru | | P | | |
| Right | | P | | | Right | | P | | |
| Peds | | | | | Peds | | | | |
| WB Left | | | P | | SB Left | | | P | |
| Thru | | | | P | Thru | | | | P |
| Right | | | | P | Right | | | | P |
| Peds | | | | | Peds | | | | |
| NB Right | | | | | EB Right | | | | |
| SB Right | | | | | WB Right | | | | |
| Green | 7.1 | 19.2 | 3.1 | 10.9 | | 8.4 | 8.3 | 1.8 | 7.2 |
| Yellow | 1.0 | 1.0 | 1.0 | 1.0 | | 1.0 | 1.0 | 1.0 | 0.0 |
| All Red | 0.0 | 0.0 | 0.0 | 0.0 | | 0.0 | 0.0 | 0.0 | 0.0 |

Cycle Length: 73.0 secs

## VOLUME ADJUSTMENT AND SATURATION FLOW WORKSHEET

Volume Adjustment

| | Eastbound | | | Westbound | | | Northbound | | | Southbound | | |
|---|---|---|---|---|---|---|---|---|---|---|---|---|
| | L | T | R | L | T | R | L | T | R | L | T | R |
| Volume, V | 137 | 421 | 25 | 97 | 435 | 42 | 63 | 332 | 54 | 106 | 264 | 85 |
| PHF | 0.90 | 0.90 | 0.90 | 0.90 | 0.90 | 0.90 | 0.90 | 0.90 | 0.90 | 0.90 | 0.90 | 0.90 |
| Adj flow | 152 | 468 | 28 | 108 | 483 | 47 | 70 | 369 | 60 | 118 | 293 | 94 |
| No. Lanes | 1 | 1 | 0 | 1 | 1 | 0 | 1 | 1 | 0 | 1 | 1 | 0 |
| Lane group | L | TR | | L | TR | | L | TR | | L | TR | |
| Adj flow | 152 | 496 | | 108 | 530 | | 70 | 429 | | 118 | 387 | |
| Prop LTs | | 0.000 | | | 0.000 | | | 0.000 | | | 0.000 | |
| Prop RTs | | 0.056 | | | 0.089 | | | 0.140 | | | 0.243 | |

Saturation Flow Rate (see Exhibit 16-7 to determine the adjustment factors)

| | Eastbound | | | Westbound | | | Northbound | | | Southbound | | |
|---|---|---|---|---|---|---|---|---|---|---|---|---|
| LG | L | TR | | L | TR | | L | TR | | L | TR | |
| So | 1900 | 1900 | | 1900 | 1900 | | 1900 | 1900 | | 1900 | 1900 | |
| Lanes | 1 | 1 | 0 | 1 | 1 | 0 | 1 | 1 | 0 | 1 | 1 | 0 |
| fW | 1.000 | 1.000 | | 1.000 | 1.000 | | 1.000 | 1.000 | | 1.000 | 1.000 | |
| fHV | 1.000 | 1.000 | | 1.000 | 1.000 | | 1.000 | 1.000 | | 1.000 | 1.000 | |
| fG | 1.000 | 1.000 | | 1.000 | 1.000 | | 1.000 | 1.000 | | 1.000 | 1.000 | |
| fP | 1.000 | 1.000 | | 1.000 | 1.000 | | 1.000 | 1.000 | | 1.000 | 1.000 | |
| fBB | 1.000 | 1.000 | | 1.000 | 1.000 | | 1.000 | 1.000 | | 1.000 | 1.000 | |
| fA | 1.000 | 1.000 | | 1.000 | 1.000 | | 1.000 | 1.000 | | 1.000 | 1.000 | |
| fLU | 1.000 | 1.000 | | 1.000 | 1.000 | | 1.000 | 1.000 | | 1.000 | 1.000 | |
| fRT | | 0.992 | | | 0.987 | | | 0.979 | | | 0.964 | |
| fLT | 0.950 | 1.000 | | 0.950 | 1.000 | | 0.950 | 1.000 | | 0.950 | 1.000 | |
| Sec. | | | | | | | | | | | | |
| fLpb | 1.000 | 1.000 | | 1.000 | 1.000 | | 1.000 | 1.000 | | 1.000 | 1.000 | |
| fRpb | | 1.000 | | | 1.000 | | | 1.000 | | | 1.000 | |
| S | 1805 | 1884 | | 1805 | 1875 | | 1805 | 1860 | | 1805 | 1831 | |
| Sec. | | | | | | | | | | | | |

## CAPACITY AND LOS WORKSHEET

Capacity Analysis and Lane Group Capacity

| Appr/ Mvmt | Lane Group | Adj Flow Rate (v) | Adj Sat Flow Rate (s) | Flow Ratio (v/s) | Green Ratio (g/C) | --Lane Group-- Capacity (c) | v/c Ratio |
|---|---|---|---|---|---|---|---|
| Eastbound | | | | | | | |
| Prot | | | | | | | |
| Perm | | | | | | | |
| Left | L | 152 | 1805 | # 0.08 | 0.10 | 176 | 0.86 |
| Prot | | | | | | | |
| Perm | | | | | | | |
| Thru | TR | 496 | 1884 | # 0.26 | 0.26 | 496 | 1.00 |
| Right | | | | | | | |
| Westbound | | | | | | | |
| Prot | | | | | | | |
| Perm | | | | | | | |
| Left | L | 108 | 1805 | # 0.06 | 0.04 | 77 | 1.40 |
| Prot | | | | | | | |
| Perm | | | | | | | |
| Thru | TR | 530 | 1875 | # 0.28 | 0.15 | 280 | 1.89 |
| Right | | | | | | | |
| Northbound | | | | | | | |
| Prot | | | | | | | |
| Perm | | | | | | | |
| Left | L | 70 | 1805 | # 0.04 | 0.12 | 208 | 0.34 |
| Prot | | | | | | | |
| Perm | | | | | | | |
| Thru | TR | 429 | 1860 | # 0.23 | 0.11 | 211 | 2.03 |
| Right | | | | | | | |
| Southbound | | | | | | | |
| Prot | | | | | | | |
| Perm | | | | | | | |
| Left | L | 118 | 1805 | # 0.07 | 0.02 | 45 | 2.62 |
| Prot | | | | | | | |
| Perm | | | | | | | |
| Thru | TR | 387 | 1831 | # 0.21 | 0.10 | 181 | 2.14 |
| Right | | | | | | | |

Sum of flow ratios for critical lane groups, Yc = Sum (v/s) = 1.24
Total lost time per cycle, L = 6.00 sec
Critical flow rate to capacity ratio, Xc = (Yc)(C)/(C-L) = 1.35

Control Delay and LOS Determination

| Appr/ Lane Grp | Ratios v/c | Ratios g/C | Unf Del d1 | Prog Adj Fact | Lane Grp Cap | Incremental Factor k | Incremental Del d2 | Res Del d3 | Lane Group Delay | Lane Group LOS | Approach Delay | Approach LOS |
|---|---|---|---|---|---|---|---|---|---|---|---|---|
| Eastbound | | | | | | | | | | | | |
| L | 0.86 | 0.10 | 32.5 | 1.000 | 176 | 0.50 | 53.2 | 0.0 | 85.7 | F | | |
| TR | 1.00 | 0.26 | 26.9 | 1.000 | 496 | 0.50 | 80.8 | 0.0 | 107.7 | F | 102.6 | F |
| Westbound | | | | | | | | | | | | |
| L | 1.40 | 0.04 | 35.0 | 1.000 | 77 | 0.50 | 798.6 | 0.0 | 833.5 | F | | |
| TR | 1.89 | 0.15 | 31.1 | 1.000 | 280 | 0.50 | 1621 | 0.0 | 1652 | F | 1513 | F |
| Northbound | | | | | | | | | | | | |
| L | 0.34 | 0.12 | 29.7 | 1.000 | 208 | 0.50 | 4.4 | 0.0 | 34.1 | C | | |
| TR | 2.03 | 0.11 | 32.4 | 1.000 | 211 | 0.50 | 1876 | 0.0 | 1909 | F | 1646 | F |
| Southbound | | | | | | | | | | | | |
| L | 2.62 | 0.02 | 35.6 | 1.000 | 45 | 0.50 | 2983 | 0.0 | 3019 | F | | |
| TR | 2.14 | 0.10 | 32.9 | 1.000 | 181 | 0.50 | 2067 | 0.0 | 2100 | F | 2315 | F |

Intersection delay = 1320 (sec/veh) Intersection LOS = F

SUPPLEMENTAL PERMITTED LT WORKSHEET
for exclusive lefts

Input

| | | EB | WB | NB | SB |
|---|---|---|---|---|---|
| Opposed by Single(S) or Multiple(M) lane approach | | | | | |
| Cycle length, C | 73.0 sec | | | | |
| Total actual green time for LT lane group, G (s) | | | | | |
| Effective permitted green time for LT lane group, g(s) | | | | | |
| Opposing effective green time, go (s) | | | | | |
| Number of lanes in LT lane group, N | | | | | |
| Number of lanes in opposing approach, No | | | | | |
| Adjusted LT flow rate, VLT (veh/h) | | | | | |
| Proportion of LT in LT lane group, PLT | | | | | |
| Proportion of LT in opposing flow, PLTo | | | | | |
| Adjusted opposing flow rate, Vo (veh/h) | | | | | |
| Lost time for LT lane group, tL | | | | | |
| Computation | | | | | |
| LT volume per cycle, LTC=VLTC/3600 | | | | | |
| Opposing lane util. factor, fLUo | | 1.000 | 1.000 | 1.000 | 1.000 |
| Opposing flow, Volc=VoC/[3600(No)fLUo] (veh/ln/cyc) | | | | | |
| gf=G[exp(- a * (LTC ** b))]-tl, gf<=g | | | | | |
| Opposing platoon ratio, Rpo (refer Exhibit 16-11) | | | | | |
| Opposing Queue Ratio, qro=Max[1-Rpo(go/C),0] | | | | | |
| gq, (see Exhibit C16-4,5,6,7,8) | | | | | |
| gu=g-gq if gq>=gf, or = g-gf if gq<gf | | | | | |
| n=Max(gq-gf)/2,0) | | | | | |
| PTHo=1-PLTo | | | | | |
| PL*=PLT[1+(N-1)g/(gf+gu/EL1+4.24)] | | | | | |
| EL1 (refer to Exhibit C16-3) | | | | | |
| EL2=Max((1-Ptho**n)/Plto, 1.0) | | | | | |
| fmin=2(1+PL)/g or fmin=2(1+Pl)/g | | | | | |
| gdiff=max(gq-gf,0) | | | | | |
| fm=[gf/g]+[gu/g]/[1+PL(EL1-1)], (min=fmin;max=1.00) | | | | | |
| flt=fm=[gf/g]+[gu/g]/[1+PL(EL1-1)]+[gdiff/g]/[1+PL(EL2-1)],(fmin<=fm<=1.00) | | | | | |
| or flt=[fm+0.91(N-1)]/N** | | | | | |
| Left-turn adjustment, fLT | | | | | |

For special case of single-lane approach opposed by multilane approach, see text.
* If Pl>=1 for shared left-turn lanes with N>1, then assume de-facto left-turn lane and redo calculations.
** For permitted left-turns with multiple exclusive left-turn lanes, flt=fm.
For special case of multilane approach opposed by single-lane approach or when gf>gq, see text.

SUPPLEMENTAL PERMITTED LT WORKSHEET
for shared lefts

Input

| | | EB | WB | NB | SB |
|---|---|---|---|---|---|
| Opposed by Single(S) or Multiple(M) lane approach | | | | | |
| Cycle length, C | 73.0 sec | | | | |
| Total actual green time for LT lane group, G (s) | | | | | |
| Effective permitted green time for LT lane group, g(s) | | | | | |
| Opposing effective green time, go (s) | | | | | |
| Number of lanes in LT lane group, N | | | | | |

Number of lanes in opposing approach, No
Adjusted LT flow rate, VLT (veh/h)
Proportion of LT in LT lane group, PLT 0.000 0.000 0.000 0.000
Proportion of LT in opposing flow, PLTo
Adjusted opposing flow rate, Vo (veh/h)
Lost time for LT lane group, tL
Computation
LT volume per cycle, LTC=VLTC/3600
Opposing lane util. factor, fLUo 1.000 1.000 1.000 1.000
Opposing flow, Volc=VoC/[3600(No)fLUo] (veh/ln/cyc)
gf=G[exp(- a * (LTC ** b)]-tl, gf<=g
Opposing platoon ratio, Rpo (refer Exhibit 16-11)
Opposing Queue Ratio, qro=Max[1-Rpo(go/C),0]
gq, (see Exhibit C16-4,5,6,7,8)
gu=g-gq if gq>=gf, or = g-gf if gq<gf
n=Max(gq-gf)/2,0)
PTHo=1-PLTo
PL*=PLT[1+(N-1)g/(gf+gu/EL1+4.24)]
EL1 (refer to Exhibit C16-3)
EL2=Max((1-Ptho**n)/Plto, 1.0)
fmin=2(1+PL)/g or fmin=2(1+Pl)/g
gdiff=max(gq-gf,0)
fm=[gf/g]+[gu/g]/[1+PL(EL1-1)], (min=fmin;max=1.00)
flt=fm=[gf/g]+[gu/g]/[1+PL(EL1-1)]+[gdiff/g]/[1+PL(EL2-1)],(fmin<=fm<=1.00)
or flt=[fm+0.91(N-1)]/N**
Left-turn adjustment, fLT

For special case of single-lane approach opposed by multilane approach, see text.
* If Pl>=1 for shared left-turn lanes with N>1, then assume de-facto left-turn lane and redo calculations.
** For permitted left-turns with multiple exclusive left-turn lanes, flt=fm.
For special case of multilane approach opposed by single-lane approach or when gf>gq, see text.

## SUPPLEMENTAL PEDESTRIAN-BICYCLE EFFECTS WORKSHEET

Permitted Left Turns EB WB NB SB
Effective pedestrian green time, gp (s)
Conflicting pedestrian volume, Vped (p/h)
Pedestrian flow rate, Vpedg (p/h)
OCCpedg
Opposing queue clearing green, gq (s)
Eff. ped. green consumed by opp. veh. queue, gq/gp
OCCpedu
Opposing flow rate, Vo (veh/h)
OCCr
Number of cross-street receiving lanes, Nrec
Number of turning lanes, Nturn
ApbT
Proportion of left turns, PLT
Proportion of left turns using protected phase, PLTA
Left-turn adjustment, fLpb
Permitted Right Turns
Effective pedestrian green time, gp (s)
Conflicting pedestrian volume, Vped (p/h)
Conflicting bicycle volume, Vbic (bicycles/h)
Vpedg
OCCpedg
Effective green, g (s)
Vbicg
OCCbicg
OCCr
Number of cross-street receiving lanes, Nrec
Number of turning lanes, Nturn
ApbT
Proportion right-turns, PRT
Proportion right-turns using protected phase, PRTA
Right turn adjustment, fRpb

## SUPPLEMENTAL UNIFORM DELAY WORKSHEET

EBLT WBLT NBLT SBLT
Cycle length, C 73.0 sec
Adj. LT vol from Vol Adjustment Worksheet, v
v/c ratio from Capacity Worksheet, X
Protected phase effective green interval, g (s)
Opposing queue effective green interval, gq
Unopposed green interval, gu
Red time r=(C-g-gq-gu)
Arrival rate, qa=v/(3600(max[X,1.0]))
Protected ph. departure rate, Sp=s/3600
Permitted ph. departure rate, Ss=s(gq+gu)/(gu*3600)
XPerm
XProt
Case
Queue at beginning of green arrow, Qa
Queue at beginning of unsaturated green, Qu
Residual queue, Qr
Uniform Delay, d1

## DELAY/LOS WORKSHEET WITH INITIAL QUEUE

| Appr/ Lane Group | Initial Unmet Demand Q veh | Dur. Unmet Demand t hrs. | Uniform Delay Unadj. ds | Uniform Delay Adj. d1 sec | Initial Queue Param. u | Final Unmet Demand Q veh | Initial Queue Delay d3 sec | Lane Group Delay d sec |
|---|---|---|---|---|---|---|---|---|
| Eastbound | | | | | | | | |
| L | 0.0 | 0.00 | 33.0 | 32.5 | 0.00 | 0.0 | 0.0 | 85.7 |
| TR | 0.0 | 0.00 | 26.9 | 26.9 | 0.00 | 0.0 | 0.0 | 107.7 |
| | 0.0 | | | | | | 0.0 | |
| Westbound | | | | | | | | |
| L | 0.0 | 0.00 | 35.0 | 35.0 | 0.00 | 31.0 | 0.0 | 833.5 |
| TR | 0.0 | 0.00 | 31.1 | 31.1 | 0.00 | 250.0 | 0.0 | 1652 |
| | 0.0 | | | | | | 0.0 | |
| Northbound | | | | | | | | |
| L | 0.0 | 0.00 | 32.3 | 29.7 | 0.00 | 0.0 | 0.0 | 34.1 |
| TR | 0.0 | 0.00 | 32.4 | 32.4 | 0.00 | 218.0 | 0.0 | 1909 |
| | 0.0 | | | | | | 0.0 | |
| Southbound | | | | | | | | |
| L | 0.0 | 0.00 | 35.6 | 35.6 | 0.00 | 73.0 | 0.0 | 3019 |
| TR | 0.0 | 0.00 | 32.9 | 32.9 | 0.00 | 206.0 | 0.0 | 2100 |
| | 0.0 | | | | | | 0.0 | |

Intersection Delay 1320 sec/veh Intersection LOS F

## BACK OF QUEUE WORKSHEET

| | Eastbound | | | Westbound | | | Northbound | | | Southbound | | |
|---|---|---|---|---|---|---|---|---|---|---|---|---|
| LaneGroup | L | TR | | L | TR | | L | TR | | L | TR | |
| Init Queue | 0.0 | 0.0 | | 0.0 | 0.0 | | 0.0 | 0.0 | | 0.0 | 0.0 | |
| Flow Rate | 152 | 496 | | 108 | 530 | | 70 | 429 | | 118 | 387 | |
| So | 1900 | 1900 | | 1900 | 1900 | | 1900 | 1900 | | 1900 | 1900 | |
| No.Lanes | 1 | 1 | 0 | 1 | 1 | 0 | 1 | 1 | 0 | 1 | 1 | 0 |
| SL | 1805 | 1884 | | 1805 | 1875 | | 1805 | 1860 | | 1805 | 1831 | |
| LnCapacity | 176 | 496 | | 77 | 280 | | 208 | 211 | | 45 | 181 | |
| Flow Ratio | 0.1 | 0.3 | | 0.1 | 0.3 | | 0.0 | 0.2 | | 0.1 | 0.2 | |
| v/c Ratio | 0.86 | 1.00 | | 1.40 | 1.89 | | 0.34 | 2.03 | | 2.62 | 2.14 | |
| Grn Ratio | 0.10 | 0.26 | | 0.04 | 0.15 | | 0.12 | 0.11 | | 0.02 | 0.10 | |
| I Factor | | 1.000 | | | 1.000 | | | 1.000 | | | 1.000 | |
| AT or PVG | 3 | 3 | | 3 | 3 | | 3 | 3 | | 3 | 3 | |
| Pltn Ratio | 1.00 | 1.00 | | 1.00 | 1.00 | | 1.00 | 1.00 | | 1.00 | 1.00 | |
| PF2 | 1.00 | 1.00 | | 1.00 | 1.00 | | 1.00 | 1.00 | | 1.00 | 1.00 | |
| Q1 | 3.0 | 10.1 | | 2.2 | 10.7 | | 1.3 | 8.7 | | 2.4 | 7.8 | |
| kB | 0.3 | 0.6 | | 0.2 | 0.4 | | 0.3 | 0.3 | | 0.1 | 0.3 | |
| Q2 | 1.6 | 12.2 | | 16.0 | 125.9 | | | 0.2 | 109.7 | | 36.7 | 103.6 |
| Q Average | 4.7 | 22.3 | | 18.2 | 136.6 | | | 1.5 | 118.3 | | 39.1 | 111.4 |
| Q Spacing | 25.0 | 25.0 | | 25.0 | 25.0 | | 25.0 | 25.0 | | 25.0 | 25.0 | |
| Q Storage | 0 | 0 | | 0 | 0 | | 0 | 0 | | 0 | 0 | |
| Q S Ratio | | | | | | | | | | | | |
| 70th Percentile Output: | | | | | | | | | | | | |
| fB% | 1.2 | 1.2 | | 1.2 | 1.2 | | 1.3 | 1.2 | | 1.2 | 1.2 | |
| BOQ | 5.8 | 26.8 | | 21.9 | 164 | | 1.9 | 142 | | 46.9 | 134 | |
| QSRatio | | | | | | | | | | | | |
| 85th Percentile Output: | | | | | | | | | | | | |
| fB% | 1.5 | 1.4 | | 1.4 | 1.4 | | 1.6 | 1.4 | | 1.4 | 1.4 | |
| BOQ | 7.1 | 31.3 | | 25.7 | 191 | | 2.4 | 166 | | 54.7 | 156 | |
| QSRatio | | | | | | | | | | | | |
| 90th Percentile Output: | | | | | | | | | | | | |
| fB% | 1.7 | 1.5 | | 1.5 | 1.5 | | 1.9 | 1.5 | | 1.5 | 1.5 | |
| BOQ | 7.9 | 33.6 | | 27.6 | 205 | | 2.8 | 178 | | 58.6 | 167 | |
| QSRatio | | | | | | | | | | | | |
| 95th Percentile Output: | | | | | | | | | | | | |
| fB% | 2.0 | 1.6 | | 1.6 | 1.6 | | 2.3 | 1.6 | | 1.6 | 1.6 | |
| BOQ | 9.3 | 35.9 | | 29.7 | 219 | | 3.5 | 189 | | 62.5 | 178 | |
| QSRatio | | | | | | | | | | | | |
| 98th Percentile Output: | | | | | | | | | | | | |
| fB% | 2.3 | 1.7 | | 1.7 | 1.7 | | 2.8 | 1.7 | | 1.7 | 1.7 | |
| BOQ | 10.7 | 38.3 | | 31.7 | 232 | | 4.1 | 201 | | 66.4 | 189 | |
| QSRatio | | | | | | | | | | | | |

ERROR MESSAGES

No errors to report.

# Appendix C:

## Level of Service
## Future Conditions

HCS+: Unsignalized Intersections Release 5.2

## TWO-WAY STOP CONTROL SUMMARY

Analyst: BEW
Agency/Co.: De Luz
Date Performed: 3/6/2008
Analysis Time Period: AM peak future
Intersection: 4 way, north/south stop
Jurisdiction: Hawaii County
Units: U. S. Customary
Analysis Year: 2009
Project ID: Hilo Entertainment Center, job# 560-01-08, kemiamf
East/West Street: Kekuanaoa St
North/South Street: Mililani st
Intersection Orientation: EW Study period (hrs): 1.00

### Vehicle Volumes and Adjustments

| Major Street: Approach | Eastbound | | | Westbound | | |
|---|---|---|---|---|---|---|
| Movement | 1 | 2 | 3 | 4 | 5 | 6 |
| | L | T | R | L | T | R |
| Volume | 25 | 409 | 1 | 1 | 599 | 57 |
| Peak-Hour Factor, PHF | 1.00 | 1.00 | 1.00 | 1.00 | 1.00 | 1.00 |
| Hourly Flow Rate, HFR | 25 | 409 | 1 | 1 | 599 | 57 |
| Percent Heavy Vehicles | 0 | -- | -- | 0 | -- | -- |
| Median Type/Storage | Undivided | | | / | | |
| RT Channelized? | | | | | | |
| Lanes | 0 | 1 | 0 | 0 | 1 | 0 |
| Configuration | | LTR | | | LTR | |
| Upstream Signal? | | No | | | No | |

| Minor Street: Approach | Northbound | | | Southbound | | |
|---|---|---|---|---|---|---|
| Movement | 7 | 8 | 9 | 10 | 11 | 12 |
| | L | T | R | L | T | R |
| Volume | 1 | 3 | 1 | 32 | 3 | 28 |
| Peak Hour Factor, PHF | 1.00 | 1.00 | 1.00 | 1.00 | 1.00 | 1.00 |
| Hourly Flow Rate, HFR | 1 | 3 | 1 | 32 | 3 | 28 |
| Percent Heavy Vehicles | 0 | 0 | 0 | 0 | 0 | 0 |
| Percent Grade (%) | | 0 | | | 0 | |
| Flared Approach: Exists?/Storage | | No | / | | No | / |
| Lanes | 0 | 1 | 0 | 0 | 1 | 0 |
| Configuration | | LTR | | | LTR | |

### Delay, Queue Length, and Level of Service

| Approach | EB | WB | Northbound | | | Southbound | | |
|---|---|---|---|---|---|---|---|---|
| Movement | 1 | 4 | 7 | 8 | 9 | 10 | 11 | 12 |
| Lane Config | LTR | LTR | | LTR | | | LTR | |
| v (vph) | 25 | 1 | | 5 | | | 63 | |
| C(m) (vph) | 941 | 1160 | | 224 | | | 258 | |
| v/c | 0.03 | 0.00 | | 0.02 | | | 0.24 | |
| 95% queue length | 0.08 | 0.00 | | 0.07 | | | 0.96 | |
| Control Delay | 8.9 | 8.1 | | 21.4 | | | 23.4 | |
| LOS | A | A | | C | | | C | |
| Approach Delay | | | | 21.4 | | | 23.4 | |
| Approach LOS | | | | C | | | C | |

HCS+: Unsignalized Intersections Release 5.2

Phone: Fax:
E-Mail:

## TWO-WAY STOP CONTROL(TWSC) ANALYSIS

Analyst: BEW
Agency/Co.: De Luz
Date Performed: 3/6/2008
Analysis Time Period: AM peak future
Intersection: 4 way, north/south stop
Jurisdiction: Hawaii County
Units: U. S. Customary
Analysis Year: 2009
Project ID: Hilo Entertainment Center, job# 560-01-08, kemiamf
East/West Street: Kekuanaoa St
North/South Street: Mililani st
Intersection Orientation: EW Study period (hrs): 1.00

### Vehicle Volumes and Adjustments

| Major Street Movements | 1 | 2 | 3 | 4 | 5 | 6 |
|---|---|---|---|---|---|---|
| | L | T | R | L | T | R |
| Volume | 25 | 409 | 1 | 1 | 599 | 57 |
| Peak-Hour Factor, PHF | 1.00 | 1.00 | 1.00 | 1.00 | 1.00 | 1.00 |
| Peak-15 Minute Volume | 6 | 102 | 0 | 0 | 150 | 14 |
| Hourly Flow Rate, HFR | 25 | 409 | 1 | 1 | 599 | 57 |
| Percent Heavy Vehicles | 0 | -- | -- | 0 | -- | -- |
| Median Type/Storage | Undivided | | | / | | |
| RT Channelized? | | | | | | |
| Lanes | 0 | 1 | 0 | 0 | 1 | 0 |
| Configuration | | LTR | | | LTR | |
| Upstream Signal? | | No | | | No | |

| Minor Street Movements | 7 | 8 | 9 | 10 | 11 | 12 |
|---|---|---|---|---|---|---|
| | L | T | R | L | T | R |
| Volume | 1 | 3 | 1 | 32 | 3 | 28 |
| Peak Hour Factor, PHF | 1.00 | 1.00 | 1.00 | 1.00 | 1.00 | 1.00 |
| Peak-15 Minute Volume | 0 | 1 | 0 | 8 | 1 | 7 |
| Hourly Flow Rate, HFR | 1 | 3 | 1 | 32 | 3 | 28 |
| Percent Heavy Vehicles | 0 | 0 | 0 | 0 | 0 | 0 |
| Percent Grade (%) | | 0 | | | 0 | |
| Flared Approach: Exists?/Storage | | No | / | | No | / |
| RT Channelized? | | | | | | |
| Lanes | 0 | 1 | 0 | 0 | 1 | 0 |
| Configuration | | LTR | | | LTR | |

### Pedestrian Volumes and Adjustments

| Movements | 13 | 14 | 15 | 16 |
|---|---|---|---|---|
| Flow (ped/hr) | 0 | 0 | 0 | 0 |

| | | | | |
|---|---|---|---|---|
| Lane Width (ft) | 12.0 | 12.0 | 12.0 | 12.0 |
| Walking Speed (ft/sec) | 4.0 | 4.0 | 4.0 | 4.0 |
| Percent Blockage | 0 | 0 | 0 | 0 |

Upstream Signal Data

| | | Prog. Flow vph | Sat Flow vph | Arrival Type | Green Time sec | Cycle Length sec | Prog. Speed mph | Distance to Signal feet |
|---|---|---|---|---|---|---|---|---|
| S2 | Left-Turn | | | | | | | |
| | Through | | | | | | | |
| S5 | Left-Turn | | | | | | | |
| | Through | | | | | | | |

Worksheet 3-Data for Computing Effect of Delay to Major Street Vehicles

| | Movement 2 | Movement 5 |
|---|---|---|
| Shared ln volume, major th vehicles: | 409 | 599 |
| Shared ln volume, major rt vehicles: | 1 | 57 |
| Sat flow rate, major th vehicles: | 1700 | 1700 |
| Sat flow rate, major rt vehicles: | 1700 | 1700 |
| Number of major street through lanes: | 1 | 1 |

Worksheet 4-Critical Gap and Follow-up Time Calculation

Critical Gap Calculation

| Movement | | 1 L | 4 L | 7 L | 8 T | 9 R | 10 L | 11 T | 12 R |
|---|---|---|---|---|---|---|---|---|---|
| t(c,base) | | 4.1 | 4.1 | 7.1 | 6.5 | 6.2 | 7.1 | 6.5 | 6.2 |
| t(c,hv) | | 1.00 | 1.00 | 1.00 | 1.00 | 1.00 | 1.00 | 1.00 | 1.00 |
| P(hv) | | 0 | 0 | 0 | 0 | 0 | 0 | 0 | 0 |
| t(c,g) | | | | 0.20 | 0.20 | 0.10 | 0.20 | 0.20 | 0.10 |
| Grade/100 | | | | 0.00 | 0.00 | 0.00 | 0.00 | 0.00 | 0.00 |
| t(3,lt) | | 0.00 | 0.00 | 0.00 | 0.00 | 0.00 | 0.00 | 0.00 | 0.00 |
| t(c,T): | 1-stage | 0.00 | 0.00 | 0.00 | 0.00 | 0.00 | 0.00 | 0.00 | 0.00 |
| | 2-stage | 0.00 | 0.00 | 1.00 | 1.00 | 0.00 | 1.00 | 1.00 | 0.00 |
| t(c) | 1-stage | 4.1 | 4.1 | 7.1 | 6.5 | 6.2 | 7.1 | 6.5 | 6.2 |
| | 2-stage | | | | | | | | |

Follow-Up Time Calculations

| Movement | 1 L | 4 L | 7 L | 8 T | 9 R | 10 L | 11 T | 12 R |
|---|---|---|---|---|---|---|---|---|
| t(f,base) | 2.20 | 2.20 | 3.50 | 4.00 | 3.30 | 3.50 | 4.00 | 3.30 |
| t(f,HV) | 0.90 | 0.90 | 0.90 | 0.90 | 0.90 | 0.90 | 0.90 | 0.90 |
| P(HV) | 0 | 0 | 0 | 0 | 0 | 0 | 0 | 0 |
| t(f) | 2.2 | 2.2 | 3.5 | 4.0 | 3.3 | 3.5 | 4.0 | 3.3 |

Worksheet 5-Effect of Upstream Signals

Computation 1-Queue Clearance Time at Upstream Signal

| | Movement 2 V(t) | Movement 2 V(l,prot) | Movement 5 V(t) | Movement 5 V(l,prot) |
|---|---|---|---|---|
| V prog | | | | |
| Total Saturation Flow Rate, s (vph) | | | | |
| Arrival Type | | | | |
| Effective Green, g (sec) | | | | |
| Cycle Length, C (sec) | | | | |
| Rp (from Exhibit 16-11) | | | | |
| Proportion vehicles arriving on green P | | | | |
| g(q1) | | | | |
| g(q2) | | | | |
| g(q) | | | | |

Computation 2-Proportion of TWSC Intersection Time blocked

| | Movement 2 V(t) | Movement 2 V(l,prot) | Movement 5 V(t) | Movement 5 V(l,prot) |
|---|---|---|---|---|
| alpha | | | | |
| beta | | | | |
| Travel time, t(a) (sec) | | | | |
| Smoothing Factor, F | | | | |
| Proportion of conflicting flow, f | | | | |
| Max platooned flow, V(c,max) | | | | |
| Min platooned flow, V(c,min) | | | | |
| Duration of blocked period, t(p) | | | | |
| Proportion time blocked, p | 0.000 | | 0.000 | |

| Computation 3-Platoon Event Periods | Result |
|---|---|
| p(2) | 0.000 |
| p(5) | 0.000 |
| p(dom) | |
| p(subo) | |
| Constrained or unconstrained? | |

| Proportion unblocked for minor movements, p(x) | (1) Single-stage Process | (2) Two-Stage Process Stage I | (3) Two-Stage Process Stage II |
|---|---|---|---|
| p(1) | | | |
| p(4) | | | |
| p(7) | | | |
| p(8) | | | |
| p(9) | | | |
| p(10) | | | |
| p(11) | | | |
| p(12) | | | |

Computation 4 and 5

Single-Stage Process

| Movement | 1 L | 4 L | 7 L | 8 T | 9 R | 10 L | 11 T | 12 R |
|---|---|---|---|---|---|---|---|---|
| V c,x | 656 | 410 | 1105 | 1118 | 410 | 1092 | 1090 | 628 |
| s | | | | | | | | |
| Px | | | | | | | | |
| V c,u,x | | | | | | | | |
| C r,x | | | | | | | | |
| C plat,x | | | | | | | | |

Two-Stage Process

| | 7 | 8 | 10 | 11 |
|---|---|---|---|---|

| | Stage1 | Stage2 | Stage1 | Stage2 | Stage1 | Stage2 | Stage1 | Stage2 |
|---|---|---|---|---|---|---|---|---|
| V(c,x) | | | | | | | | |
| s | | 1500 | | 1500 | | 1500 | | 1500 |
| P(x) | | | | | | | | |
| V(c,u,x) | | | | | | | | |
| C(r,x) | | | | | | | | |
| C(plat,x) | | | | | | | | |

Worksheet 6-Impedance and Capacity Equations

| Step 1: RT from Minor St. | 9 | 12 |
|---|---|---|
| Conflicting Flows | 410 | 628 |
| Potential Capacity | 646 | 487 |
| Pedestrian Impedance Factor | 1.00 | 1.00 |
| Movement Capacity | 646 | 487 |
| Probability of Queue free St. | 1.00 | 0.94 |

| Step 2: LT from Major St. | 4 | 1 |
|---|---|---|
| Conflicting Flows | 410 | 656 |
| Potential Capacity | 1160 | 941 |
| Pedestrian Impedance Factor | 1.00 | 1.00 |
| Movement Capacity | 1160 | 941 |
| Probability of Queue free St. | 1.00 | 0.97 |
| Maj L-Shared Prob Q free St. | 1.00 | 0.96 |

| Step 3: TH from Minor St. | 8 | 11 |
|---|---|---|
| Conflicting Flows | 1118 | 1090 |
| Potential Capacity | 209 | 217 |
| Pedestrian Impedance Factor | 1.00 | 1.00 |
| Cap. Adj. factor due to Impeding mvmnt | 0.96 | 0.96 |
| Movement Capacity | 201 | 209 |
| Probability of Queue free St. | 0.99 | 0.99 |

| Step 4: LT from Minor St. | 7 | 10 |
|---|---|---|
| Conflicting Flows | 1105 | 1092 |
| Potential Capacity | 190 | 194 |
| Pedestrian Impedance Factor | 1.00 | 1.00 |
| Maj. L, Min T Impedance factor | 0.95 | 0.95 |
| Maj. L, Min T Adj. Imp Factor. | 0.96 | 0.96 |
| Cap. Adj. factor due to Impeding mvmnt | 0.91 | 0.96 |
| Movement Capacity | 172 | 186 |

Worksheet 7-Computation of the Effect of Two-stage Gap Acceptance

| Step 3: TH from Minor St. | 8 | 11 |
|---|---|---|
| Part 1 - First Stage | | |
| Conflicting Flows | | |
| Potential Capacity | | |
| Pedestrian Impedance Factor | | |
| Cap. Adj. factor due to Impeding mvmnt | | |
| Movement Capacity | | |
| Probability of Queue free St. | | |
| Part 2 - Second Stage | | |
| Conflicting Flows | | |
| Potential Capacity | | |
| Pedestrian Impedance Factor | | |
| Cap. Adj. factor due to Impeding mvmnt | | |
| Movement Capacity | | |
| Part 3 - Single Stage | | |
| Conflicting Flows | 1118 | 1090 |
| Potential Capacity | 209 | 217 |
| Pedestrian Impedance Factor | 1.00 | 1.00 |
| Cap. Adj. factor due to Impeding mvmnt | 0.96 | 0.96 |
| Movement Capacity | 201 | 209 |
| Result for 2 stage process: | | |
| a | | |
| y | | |
| C t | 201 | 209 |
| Probability of Queue free St. | 0.99 | 0.99 |

| Step 4: LT from Minor St. | 7 | 10 |
|---|---|---|
| Part 1 - First Stage | | |
| Conflicting Flows | | |
| Potential Capacity | | |
| Pedestrian Impedance Factor | | |
| Cap. Adj. factor due to Impeding mvmnt | | |
| Movement Capacity | | |
| Part 2 - Second Stage | | |
| Conflicting Flows | | |
| Potential Capacity | | |
| Pedestrian Impedance Factor | | |
| Cap. Adj. factor due to Impeding mvmnt | | |
| Movement Capacity | | |
| Part 3 - Single Stage | | |
| Conflicting Flows | 1105 | 1092 |
| Potential Capacity | 190 | 194 |
| Pedestrian Impedance Factor | 1.00 | 1.00 |
| Maj. L, Min T Impedance factor | 0.95 | 0.95 |
| Maj. L, Min T Adj. Imp Factor. | 0.96 | 0.96 |
| Cap. Adj. factor due to Impeding mvmnt | 0.91 | 0.96 |
| Movement Capacity | 172 | 186 |
| Results for Two-stage process: | | |
| a | | |
| y | | |
| C t | 172 | 186 |

Worksheet 8-Shared Lane Calculations

| Movement | 7 L | 8 T | 9 R | 10 L | 11 T | 12 R |
|---|---|---|---|---|---|---|
| Volume (vph) | 1 | 3 | 1 | 32 | 3 | 28 |
| Movement Capacity (vph) | 172 | 201 | 646 | 186 | 209 | 487 |
| Shared Lane Capacity (vph) | | 224 | | | 258 | |

## Worksheet 9-Computation of Effect of Flared Minor Street Approaches

| Movement | 7 L | 8 T | 9 R | 10 L | 11 T | 12 R |
|---|---|---|---|---|---|---|
| C sep | 172 | 201 | 646 | 186 | 209 | 487 |
| Volume | 1 | 3 | 1 | 32 | 3 | 28 |
| Delay | | | | | | |
| Q sep | | | | | | |
| Q sep +1 | | | | | | |
| round (Qsep +1) | | | | | | |
| n max | | | | | | |
| C sh | | 224 | | | 258 | |
| SUM C sep | | | | | | |
| n | | | | | | |
| C act | | | | | | |

## Worksheet 10-Delay, Queue Length, and Level of Service

| Movement | 1 | 4 | 7 | 8 | 9 | 10 | 11 | 12 |
|---|---|---|---|---|---|---|---|---|
| Lane Config | LTR | LTR | | LTR | | | LTR | |
| v (vph) | 25 | 1 | | 5 | | | 63 | |
| C(m) (vph) | 941 | 1160 | | 224 | | | 258 | |
| v/c | 0.03 | 0.00 | | 0.02 | | | 0.24 | |
| 95% queue length | 0.08 | 0.00 | | 0.07 | | | 0.96 | |
| Control Delay | 8.9 | 8.1 | | 21.4 | | | 23.4 | |
| LOS | A | A | | C | | | C | |
| Approach Delay | | | | 21.4 | | | 23.4 | |
| Approach LOS | | | | C | | | C | |

## Worksheet 11-Shared Major LT Impedance and Delay

| | Movement 2 | Movement 5 |
|---|---|---|
| p(oj) | 0.97 | 1.00 |
| v(i1), Volume for stream 2 or 5 | 409 | 599 |
| v(i2), Volume for stream 3 or 6 | 1 | 57 |
| s(i1), Saturation flow rate for stream 2 or 5 | 1700 | 1700 |
| s(i2), Saturation flow rate for stream 3 or 6 | 1700 | 1700 |
| P*(oj) | 0.96 | 1.00 |
| d(M,LT), Delay for stream 1 or 4 | 8.9 | 8.1 |
| N, Number of major street through lanes | 1 | 1 |
| d(rank,1) Delay for stream 2 or 5 | 0.3 | 0.0 |

HCS+: Unsignalized Intersections Release 5.2

## TWO-WAY STOP CONTROL SUMMARY

Analyst: BEW
Agency/Co.: De Luz
Date Performed: 3/6/2008
Analysis Time Period: PM peak future
Intersection: 4 way, north/south stop
Jurisdiction: Hawaii County
Units: U. S. Customary
Analysis Year: 2009
Project ID: Hilo Entertainment Center, job# 560-01-08 kemipmf
East/West Street: Kekuanaoa St
North/South Street: Mililani st
Intersection Orientation: EW  Study period (hrs): 1.00

## Vehicle Volumes and Adjustments

| Major Street: Approach | Eastbound | | | Westbound | | |
|---|---|---|---|---|---|---|
| Movement | 1 L | 2 T | 3 R | 4 L | 5 T | 6 R |
| Volume | 33 | 581 | 1 | 1 | 581 | 59 |
| Peak-Hour Factor, PHF | 1.00 | 1.00 | 1.00 | 1.00 | 1.00 | 1.00 |
| Hourly Flow Rate, HFR | 33 | 581 | 1 | 1 | 581 | 59 |
| Percent Heavy Vehicles | 0 | -- | -- | 0 | -- | -- |
| Median Type/Storage | Undivided | | | / | | |
| RT Channelized? | | | | | | |
| Lanes | 0 | 1 | 0 | 0 | 1 | 0 |
| Configuration | | LTR | | | LTR | |
| Upstream Signal? | | No | | | No | |

| Minor Street: Approach | Northbound | | | Southbound | | |
|---|---|---|---|---|---|---|
| Movement | 7 L | 8 T | 9 R | 10 L | 11 T | 12 R |
| Volume | 1 | 3 | 1 | 86 | 3 | 55 |
| Peak Hour Factor, PHF | 1.00 | 1.00 | 1.00 | 1.00 | 1.00 | 1.00 |
| Hourly Flow Rate, HFR | 1 | 3 | 1 | 86 | 3 | 55 |
| Percent Heavy Vehicles | 0 | 0 | 0 | 0 | 0 | 0 |
| Percent Grade (%) | | 0 | | | 0 | |
| Flared Approach: Exists?/Storage | | | No / | | | No / |
| Lanes | 0 | 1 | 0 | 0 | 1 | 0 |
| Configuration | | LTR | | | LTR | |

## Delay, Queue Length, and Level of Service

| Approach | EB | WB | Northbound | | | Southbound | | |
|---|---|---|---|---|---|---|---|---|
| Movement | 1 | 4 | 7 | 8 | 9 | 10 | 11 | 12 |
| Lane Config | LTR | LTR | | LTR | | | LTR | |
| v (vph) | 33 | 1 | | 5 | | | 144 | |
| C(m) (vph) | 954 | 1002 | | 169 | | | 194 | |
| v/c | 0.03 | 0.00 | | 0.03 | | | 0.74 | |
| 95% queue length | 0.11 | 0.00 | | 0.09 | | | 6.79 | |
| Control Delay | 8.9 | 8.6 | | 27.0 | | | 72.0 | |
| LOS | A | A | | D | | | F | |
| Approach Delay | | | | 27.0 | | | 72.0 | |
| Approach LOS | | | | D | | | F | |

HCS+: Unsignalized Intersections Release 5.2

Phone: Fax:
E-Mail:

## TWO-WAY STOP CONTROL(TWSC) ANALYSIS

Analyst: BEW
Agency/Co.: De Luz
Date Performed: 3/6/2008
Analysis Time Period: PM peak future
Intersection: 4 way, north/south stop
Jurisdiction: Hawaii County
Units: U. S. Customary
Analysis Year: 2009
Project ID: Hilo Entertainment Center, job# 560-01-08 kemipmf
East/West Street: Kekuanaoa St
North/South Street: Mililani st
Intersection Orientation: EW Study period (hrs): 1.00

### Vehicle Volumes and Adjustments

| Major Street Movements | 1 L | 2 T | 3 R | 4 L | 5 T | 6 R |
|---|---|---|---|---|---|---|
| Volume | 33 | 581 | 1 | 1 | 581 | 59 |
| Peak-Hour Factor, PHF | 1.00 | 1.00 | 1.00 | 1.00 | 1.00 | 1.00 |
| Peak-15 Minute Volume | 8 | 145 | 0 | 0 | 145 | 15 |
| Hourly Flow Rate, HFR | 33 | 581 | 1 | 1 | 581 | 59 |
| Percent Heavy Vehicles | 0 | -- | -- | 0 | -- | -- |
| Median Type/Storage | Undivided | | | / | | |
| RT Channelized? | | | | | | |
| Lanes | 0 | 1 | 0 | 0 | 1 | 0 |
| Configuration | | LTR | | | LTR | |
| Upstream Signal? | | No | | | No | |

| Minor Street Movements | 7 L | 8 T | 9 R | 10 L | 11 T | 12 R |
|---|---|---|---|---|---|---|
| Volume | 1 | 3 | 1 | 86 | 3 | 55 |
| Peak Hour Factor, PHF | 1.00 | 1.00 | 1.00 | 1.00 | 1.00 | 1.00 |
| Peak-15 Minute Volume | 0 | 1 | 0 | 22 | 1 | 14 |
| Hourly Flow Rate, HFR | 1 | 3 | 1 | 86 | 3 | 55 |
| Percent Heavy Vehicles | 0 | 0 | 0 | 0 | 0 | 0 |
| Percent Grade (%) | | 0 | | | 0 | |
| Flared Approach: Exists?/Storage | | No | / | | No | / |
| RT Channelized? | | | | | | |
| Lanes | 0 | 1 | 0 | 0 | 1 | 0 |
| Configuration | | LTR | | | LTR | |

### Pedestrian Volumes and Adjustments

| Movements | 13 | 14 | 15 | 16 |
|---|---|---|---|---|
| Flow (ped/hr) | 0 | 0 | 0 | 0 |
| Lane Width (ft) | 12.0 | 12.0 | 12.0 | 12.0 |
| Walking Speed (ft/sec) | 4.0 | 4.0 | 4.0 | 4.0 |
| Percent Blockage | 0 | 0 | 0 | 0 |

### Upstream Signal Data

| | Prog. Flow vph | Sat Flow vph | Arrival Type | Green Time sec | Cycle Length sec | Prog. Speed mph | Distance to Signal feet |
|---|---|---|---|---|---|---|---|
| S2 Left-Turn | | | | | | | |
| Through | | | | | | | |
| S5 Left-Turn | | | | | | | |
| Through | | | | | | | |

### Worksheet 3-Data for Computing Effect of Delay to Major Street Vehicles

| | Movement 2 | Movement 5 |
|---|---|---|
| Shared ln volume, major th vehicles: | 581 | 581 |
| Shared ln volume, major rt vehicles: | 1 | 59 |
| Sat flow rate, major th vehicles: | 1700 | 1700 |
| Sat flow rate, major rt vehicles: | 1700 | 1700 |
| Number of major street through lanes: | 1 | 1 |

### Worksheet 4-Critical Gap and Follow-up Time Calculation

Critical Gap Calculation

| Movement | | 1 L | 4 L | 7 L | 8 T | 9 R | 10 L | 11 T | 12 R |
|---|---|---|---|---|---|---|---|---|---|
| t(c,base) | | 4.1 | 4.1 | 7.1 | 6.5 | 6.2 | 7.1 | 6.5 | 6.2 |
| t(c,hv) | | 1.00 | 1.00 | 1.00 | 1.00 | 1.00 | 1.00 | 1.00 | 1.00 |
| P(hv) | | 0 | 0 | 0 | 0 | 0 | 0 | 0 | 0 |
| t(c,g) | | | | 0.20 | 0.20 | 0.10 | 0.20 | 0.20 | 0.10 |
| Grade/100 | | | | 0.00 | 0.00 | 0.00 | 0.00 | 0.00 | 0.00 |
| t(3,lt) | | 0.00 | 0.00 | 0.00 | 0.00 | 0.00 | 0.00 | 0.00 | 0.00 |
| t(c,T): | 1-stage | 0.00 | 0.00 | 0.00 | 0.00 | 0.00 | 0.00 | 0.00 | 0.00 |
| | 2-stage | 0.00 | 0.00 | 1.00 | 1.00 | 0.00 | 1.00 | 1.00 | 0.00 |
| t(c) | 1-stage | 4.1 | 4.1 | 7.1 | 6.5 | 6.2 | 7.1 | 6.5 | 6.2 |
| | 2-stage | | | | | | | | |

Follow-Up Time Calculations

| Movement | 1 L | 4 L | 7 L | 8 T | 9 R | 10 L | 11 T | 12 R |
|---|---|---|---|---|---|---|---|---|
| t(f,base) | 2.20 | 2.20 | 3.50 | 4.00 | 3.30 | 3.50 | 4.00 | 3.30 |
| t(f,HV) | 0.90 | 0.90 | 0.90 | 0.90 | 0.90 | 0.90 | 0.90 | 0.90 |
| P(HV) | 0 | 0 | 0 | 0 | 0 | 0 | 0 | 0 |
| t(f) | 2.2 | 2.2 | 3.5 | 4.0 | 3.3 | 3.5 | 4.0 | 3.3 |

### Worksheet 5-Effect of Upstream Signals

Computation 1-Queue Clearance Time at Upstream Signal

| | Movement 2 V(t) | Movement 2 V(l,prot) | Movement 5 V(t) | Movement 5 V(l,prot) |
|---|---|---|---|---|
| V prog | | | | |

| | | | | | | | | |
|---|---|---|---|---|---|---|---|---|
| Total Saturation Flow Rate, s (vph) | | | | | | | | |
| Arrival Type | | | | | | | | |
| Effective Green, g (sec) | | | | | | | | |
| Cycle Length, C (sec) | | | | | | | | |
| Rp (from Exhibit 16-11) | | | | | | | | |
| Proportion vehicles arriving on green P | | | | | | | | |
| g(q1) | | | | | | | | |
| g(q2) | | | | | | | | |
| g(q) | | | | | | | | |

Computation 2-Proportion of TWSC Intersection Time blocked

| | Movement 2 | | Movement 5 | |
|---|---|---|---|---|
| | V(t) | V(l,prot) | V(t) | V(l,prot) |
| alpha | | | | |
| beta | | | | |
| Travel time, t(a) (sec) | | | | |
| Smoothing Factor, F | | | | |
| Proportion of conflicting flow, f | | | | |
| Max platooned flow, V(c,max) | | | | |
| Min platooned flow, V(c,min) | | | | |
| Duration of blocked period, t(p) | | | | |
| Proportion time blocked, p | 0.000 | | 0.000 | |

| Computation 3-Platoon Event Periods | Result |
|---|---|
| p(2) | 0.000 |
| p(5) | 0.000 |
| p(dom) | |
| p(subo) | |
| Constrained or unconstrained? | |

| Proportion unblocked for minor movements, p(x) | (1) Single-stage Process | (2) Two-Stage Process Stage I | (3) Two-Stage Process Stage II |
|---|---|---|---|
| p(1) | | | |
| p(4) | | | |
| p(7) | | | |
| p(8) | | | |
| p(9) | | | |
| p(10) | | | |
| p(11) | | | |
| p(12) | | | |

Computation 4 and 5
Single-Stage Process

| Movement | 1 L | 4 L | 7 L | 8 T | 9 R | 10 L | 11 T | 12 R |
|---|---|---|---|---|---|---|---|---|
| V c,x | 640 | 582 | 1290 | 1290 | 582 | 1262 | 1260 | 610 |
| s | | | | | | | | |
| Px | | | | | | | | |
| V c,u,x | | | | | | | | |
| C r,x | | | | | | | | |
| C plat,x | | | | | | | | |

Two-Stage Process

| | 7 | | 8 | | 10 | | 11 | |
|---|---|---|---|---|---|---|---|---|
| | Stage1 | Stage2 | Stage1 | Stage2 | Stage1 | Stage2 | Stage1 | Stage2 |
| V(c,x) | | | | | | | | |
| s | | 1500 | | 1500 | | 1500 | | 1500 |
| P(x) | | | | | | | | |
| V(c,u,x) | | | | | | | | |
| C(r,x) | | | | | | | | |
| C(plat,x) | | | | | | | | |

Worksheet 6-Impedance and Capacity Equations

| Step 1: RT from Minor St. | 9 | 12 |
|---|---|---|
| Conflicting Flows | 582 | 610 |
| Potential Capacity | 517 | 498 |
| Pedestrian Impedance Factor | 1.00 | 1.00 |
| Movement Capacity | 517 | 498 |
| Probability of Queue free St. | 1.00 | 0.89 |

| Step 2: LT from Major St. | 4 | 1 |
|---|---|---|
| Conflicting Flows | 582 | 640 |
| Potential Capacity | 1002 | 954 |
| Pedestrian Impedance Factor | 1.00 | 1.00 |
| Movement Capacity | 1002 | 954 |
| Probability of Queue free St. | 1.00 | 0.97 |
| Maj L-Shared Prob Q free St. | 1.00 | 0.95 |

| Step 3: TH from Minor St. | 8 | 11 |
|---|---|---|
| Conflicting Flows | 1290 | 1260 |
| Potential Capacity | 165 | 172 |
| Pedestrian Impedance Factor | 1.00 | 1.00 |
| Cap. Adj. factor due to Impeding mvmnt | 0.95 | 0.95 |
| Movement Capacity | 156 | 163 |
| Probability of Queue free St. | 0.98 | 0.98 |

| Step 4: LT from Minor St. | 7 | 10 |
|---|---|---|
| Conflicting Flows | 1290 | 1262 |
| Potential Capacity | 142 | 148 |
| Pedestrian Impedance Factor | 1.00 | 1.00 |
| Maj. L, Min T Impedance factor | 0.93 | 0.93 |
| Maj. L, Min T Adj. Imp Factor. | 0.95 | 0.94 |
| Cap. Adj. factor due to Impeding mvmnt | 0.84 | 0.94 |
| Movement Capacity | 119 | 140 |

Worksheet 7-Computation of the Effect of Two-stage Gap Acceptance

| Step 3: TH from Minor St. | 8 | 11 |
|---|---|---|
| Part 1 - First Stage | | |
| Conflicting Flows | | |
| Potential Capacity | | |
| Pedestrian Impedance Factor | | |
| Cap. Adj. factor due to Impeding mvmnt | | |
| Movement Capacity | | |
| Probability of Queue free St. | | |

| | | |
|---|---|---|
| Part 2 - Second Stage | | |
| Conflicting Flows | | |
| Potential Capacity | | |
| Pedestrian Impedance Factor | | |
| Cap. Adj. factor due to Impeding mvmnt | | |
| Movement Capacity | | |
| Part 3 - Single Stage | | |
| Conflicting Flows | 1290 | 1260 |
| Potential Capacity | 165 | 172 |
| Pedestrian Impedance Factor | 1.00 | 1.00 |
| Cap. Adj. factor due to Impeding mvmnt | 0.95 | 0.95 |
| Movement Capacity | 156 | 163 |
| Result for 2 stage process: | | |
| a | | |
| y | | |
| C t | 156 | 163 |
| Probability of Queue free St. | 0.98 | 0.98 |
| Step 4: LT from Minor St. | 7 | 10 |
| Part 1 - First Stage | | |
| Conflicting Flows | | |
| Potential Capacity | | |
| Pedestrian Impedance Factor | | |
| Cap. Adj. factor due to Impeding mvmnt | | |
| Movement Capacity | | |
| Part 2 - Second Stage | | |
| Conflicting Flows | | |
| Potential Capacity | | |
| Pedestrian Impedance Factor | | |
| Cap. Adj. factor due to Impeding mvmnt | | |
| Movement Capacity | | |
| Part 3 - Single Stage | | |
| Conflicting Flows | 1290 | 1262 |
| Potential Capacity | 142 | 148 |
| Pedestrian Impedance Factor | 1.00 | 1.00 |
| Maj. L, Min T Impedance factor | 0.93 | 0.93 |
| Maj. L, Min T Adj. Imp Factor. | 0.95 | 0.94 |
| Cap. Adj. factor due to Impeding mvmnt | 0.84 | 0.94 |
| Movement Capacity | 119 | 140 |
| Results for Two-stage process: | | |
| a | | |
| y | | |
| C t | 119 | 140 |

Worksheet 8-Shared Lane Calculations

| Movement | 7 L | 8 T | 9 R | 10 L | 11 T | 12 R |
|---|---|---|---|---|---|---|
| Volume (vph) | 1 | 3 | 1 | 86 | 3 | 55 |
| Movement Capacity (vph) | 119 | 156 | 517 | 140 | 163 | 498 |
| Shared Lane Capacity (vph) | | 169 | | | 194 | |

Worksheet 9-Computation of Effect of Flared Minor Street Approaches

| Movement | 7 L | 8 T | 9 R | 10 L | 11 T | 12 R |
|---|---|---|---|---|---|---|
| C sep | 119 | 156 | 517 | 140 | 163 | 498 |
| Volume | 1 | 3 | 1 | 86 | 3 | 55 |
| Delay | | | | | | |
| Q sep | | | | | | |
| Q sep +1 | | | | | | |
| round (Qsep +1) | | | | | | |
| n max | | | | | | |
| C sh | | 169 | | | 194 | |
| SUM C sep | | | | | | |
| n | | | | | | |
| C act | | | | | | |

Worksheet 10-Delay, Queue Length, and Level of Service

| Movement | 1 | 4 | 7 | 8 | 9 | 10 | 11 | 12 |
|---|---|---|---|---|---|---|---|---|
| Lane Config | LTR | LTR | | LTR | | | LTR | |
| v (vph) | 33 | 1 | | 5 | | | 144 | |
| C(m) (vph) | 954 | 1002 | | 169 | | | 194 | |
| v/c | 0.03 | 0.00 | | 0.03 | | | 0.74 | |
| 95% queue length | 0.11 | 0.00 | | 0.09 | | | 6.79 | |
| Control Delay | 8.9 | 8.6 | | 27.0 | | | 72.0 | |
| LOS | A | A | | D | | | F | |
| Approach Delay | | | | 27.0 | | | 72.0 | |
| Approach LOS | | | | D | | | F | |

Worksheet 11-Shared Major LT Impedance and Delay

| | Movement 2 | Movement 5 |
|---|---|---|
| p(oj) | 0.97 | 1.00 |
| v(i1), Volume for stream 2 or 5 | 581 | 581 |
| v(i2), Volume for stream 3 or 6 | 1 | 59 |
| s(i1), Saturation flow rate for stream 2 or 5 | 1700 | 1700 |
| s(i2), Saturation flow rate for stream 3 or 6 | 1700 | 1700 |
| P*(oj) | 0.95 | 1.00 |
| d(M,LT), Delay for stream 1 or 4 | 8.9 | 8.6 |
| N, Number of major street through lanes | 1 | 1 |
| d(rank,1) Delay for stream 2 or 5 | 0.5 | 0.0 |

HCS+: Signalized Intersections Release 5.2

Analyst: BEW
Agency: De Luz
Date: 3/6/2008
Period: AM peak future
Project ID: Hilo entertainment center job# 560-01-08, kemaamf
E/W St: Kekuanaoa St

Inter.: 4 way
Area Type: All other areas
Jurisd: Hawaii County
Year : 2008
N/S St: Manono St

## SIGNALIZED INTERSECTION SUMMARY

| | Eastbound | | | Westbound | | | Northbound | | | Southbound | | |
|---|---|---|---|---|---|---|---|---|---|---|---|---|
| | L | T | R | L | T | R | L | T | R | L | T | R |
| No. Lanes | 1 | 1 | 0 | 1 | 1 | 0 | 1 | 1 | 0 | 1 | 1 | 0 |
| LGConfig | L | TR | | L | TR | | L | TR | | L | TR | |
| Volume | 93 | 325 | 24 | 19 | 505 | 24 | 83 | 259 | 49 | 69 | 213 | 72 |
| Lane Width | 12.0 | 12.0 | | 12.0 | 12.0 | | 12.0 | 12.0 | | 12.0 | 12.0 | |
| RTOR Vol | | | 0 | | | 0 | | | 0 | | | 0 |

Duration 0.25 Area Type: All other areas

## Signal Operations

| Phase Combination | 1 | 2 | 3 | 4 | | 5 | 6 | 7 | 8 |
|---|---|---|---|---|---|---|---|---|---|
| EB Left | P | | | | NB Left | P | | | |
| Thru | | P | | | Thru | | P | | |
| Right | | P | | | Right | | P | | |
| Peds | | | | | Peds | | | | |
| WB Left | | | P | | SB Left | | | P | |
| Thru | | | | P | Thru | | | | P |
| Right | | | | P | Right | | | | P |
| Peds | | | | | Peds | | | | |
| NB Right | | | | | EB Right | | | | |
| SB Right | | | | | WB Right | | | | |
| Green | 2.1 | 10.6 | 1.1 | 9.8 | | 1.5 | 5.8 | 1.1 | 8.0 |
| Yellow | 1.0 | 1.0 | 1.0 | 1.0 | | 1.0 | 1.0 | 1.0 | 1.0 |
| All Red | 1.0 | 1.0 | 1.0 | 1.0 | | 1.0 | 1.0 | 1.0 | 1.0 |

Cycle Length: 56.0 secs

## Intersection Performance Summary

| Appr/ Lane Grp | Lane Group Capacity | Adj Sat Flow Rate (s) | Ratios v/c | Ratios g/C | Lane Group Delay | Lane Group LOS | Approach Delay | Approach LOS |
|---|---|---|---|---|---|---|---|---|
| Eastbound | | | | | | | | |
| L | 68 | 1805 | 1.51 | 0.04 | 320.1 | F | | |
| TR | 356 | 1880 | 1.09 | 0.19 | 96.7 | F | 143.5 | F |
| Westbound | | | | | | | | |
| L | 35 | 1805 | 0.60 | 0.02 | 85.5 | F | | |
| TR | 330 | 1887 | 1.78 | 0.17 | 386.9 | F | 376.5 | F |
| Northbound | | | | | | | | |
| L | 48 | 1805 | 1.92 | 0.03 | 507.1 | F | | |
| TR | 192 | 1855 | 1.78 | 0.10 | 396.9 | F | 420.3 | F |
| Southbound | | | | | | | | |
| L | 35 | 1805 | 2.20 | 0.02 | 649.3 | F | | |
| TR | 261 | 1828 | 1.21 | 0.14 | 150.4 | F | 247.9 | F |

Intersection Delay = 300.8 (sec/veh) Intersection LOS = F

HCS+: Signalized Intersections Release 5.2

Phone: Fax:
E-Mail:

## OPERATIONAL ANALYSIS

Analyst: BEW
Agency/Co.: De Luz
Date Performed: 3/6/2008
Analysis Time Period: AM peak future
Intersection: 4 way
Area Type: All other areas
Jurisdiction: Hawaii County
Analysis Year: 2008
Project ID: Hilo entertainment center job# 560-01-08, kemaamf
E/W St: Kekuanaoa St N/S St: Manono St

## VOLUME DATA

| | Eastbound | | | Westbound | | | Northbound | | | Southbound | | |
|---|---|---|---|---|---|---|---|---|---|---|---|---|
| | L | T | R | L | T | R | L | T | R | L | T | R |
| Volume | 93 | 325 | 24 | 19 | 505 | 24 | 83 | 259 | 49 | 69 | 213 | 72 |
| % Heavy Veh | 0 | 0 | 0 | 0 | 0 | 0 | 0 | 0 | 0 | 0 | 0 | 0 |
| PHF | 0.90 | 0.90 | 0.90 | 0.90 | 0.90 | 0.90 | 0.90 | 0.90 | 0.90 | 0.90 | 0.90 | 0.90 |
| PK 15 Vol | 26 | 90 | 7 | 5 | 140 | 7 | 23 | 72 | 14 | 19 | 59 | 20 |
| Hi Ln Vol | | | | | | | | | | | | |
| % Grade | | 0 | | | 0 | | | 0 | | | 0 | |
| Ideal Sat | 1900 | 1900 | | 1900 | 1900 | | 1900 | 1900 | | 1900 | 1900 | |
| ParkExist | | | | | | | | | | | | |
| NumPark | | | | | | | | | | | | |
| No. Lanes | 1 | 1 | 0 | 1 | 1 | 0 | 1 | 1 | 0 | 1 | 1 | 0 |
| LGConfig | L | TR | | L | TR | | L | TR | | L | TR | |
| Lane Width | 12.0 | 12.0 | | 12.0 | 12.0 | | 12.0 | 12.0 | | 12.0 | 12.0 | |
| RTOR Vol | | | 0 | | | 0 | | | 0 | | | 0 |
| Adj Flow | 103 | 388 | | 21 | 588 | | 92 | 342 | | 77 | 317 | |
| %InSharedLn | | | | | | | | | | | | |
| Prop LTs | | 0.000 | | | 0.000 | | | 0.000 | | | 0.000 | |
| Prop RTs | | 0.070 | | | 0.046 | | | 0.158 | | | 0.252 | |
| Peds Bikes | | 0 | | | 0 | | | 0 | | | 0 | |
| Buses | 0 | 0 | | 0 | 0 | | 0 | 0 | | 0 | 0 | |
| %InProtPhase | | | | | | | | | | | | |

Duration 0.25 Area Type: All other areas

## OPERATING PARAMETERS

| | Eastbound | | | Westbound | | | Northbound | | | Southbound | | |
|---|---|---|---|---|---|---|---|---|---|---|---|---|
| | L | T | R | L | T | R | L | T | R | L | T | R |
| Init Unmet | 0.0 | 0.0 | | 0.0 | 0.0 | | 0.0 | 0.0 | | 0.0 | 0.0 | |
| Arriv. Type | 3 | 3 | | 3 | 3 | | 3 | 3 | | 3 | 3 | |
| Unit Ext. | 3.0 | 3.0 | | 3.0 | 3.0 | | 3.0 | 3.0 | | 3.0 | 3.0 | |
| I Factor | | 1.000 | | | 1.000 | | | 1.000 | | | 1.000 | |
| Lost Time | 2.0 | 2.0 | | 2.0 | 2.0 | | 2.0 | 2.0 | | 2.0 | 2.0 | |
| Ext of g | 2.0 | 2.0 | | 2.0 | 2.0 | | 2.0 | 2.0 | | 2.0 | 2.0 | |
| Ped Min g | | 3.2 | | | 3.2 | | | 3.2 | | | 3.2 | |

## PHASE DATA

| Phase Combination | | 1 | 2 | 3 | 4 | | | 5 | 6 | 7 | 8 |
|---|---|---|---|---|---|---|---|---|---|---|---|
| EB | Left | P | | | | NB | Left | P | | | |
| | Thru | | P | | | | Thru | | P | | |
| | Right | | P | | | | Right | | P | | |
| | Peds | | | | | | Peds | | | | |
| WB | Left | | | P | | SB | Left | | | P | |
| | Thru | | | | P | | Thru | | | | P |
| | Right | | | | P | | Right | | | | P |
| | Peds | | | | | | Peds | | | | |
| NB | Right | | | | | EB | Right | | | | |
| SB | Right | | | | | WB | Right | | | | |
| Green | | 2.1 | 10.6 | 1.1 | 9.8 | | | 1.5 | 5.8 | 1.1 | 8.0 |
| Yellow | | 1.0 | 1.0 | 1.0 | 1.0 | | | 1.0 | 1.0 | 1.0 | 1.0 |
| All Red | | 1.0 | 1.0 | 1.0 | 1.0 | | | 1.0 | 1.0 | 1.0 | 1.0 |

Cycle Length: 56.0 secs

## VOLUME ADJUSTMENT AND SATURATION FLOW WORKSHEET

Volume Adjustment

| | Eastbound | | | Westbound | | | Northbound | | | Southbound | | |
|---|---|---|---|---|---|---|---|---|---|---|---|---|
| | L | T | R | L | T | R | L | T | R | L | T | R |
| Volume, V | 93 | 325 | 24 | 19 | 505 | 24 | 83 | 259 | 49 | 69 | 213 | 72 |
| PHF | 0.90 | 0.90 | 0.90 | 0.90 | 0.90 | 0.90 | 0.90 | 0.90 | 0.90 | 0.90 | 0.90 | 0.90 |
| Adj flow | 103 | 361 | 27 | 21 | 561 | 27 | 92 | 288 | 54 | 77 | 237 | 80 |
| No. Lanes | 1 | 1 | 0 | 1 | 1 | 0 | 1 | 1 | 0 | 1 | 1 | 0 |
| Lane group | L | TR | | L | TR | | L | TR | | L | TR | |
| Adj flow | 103 | 388 | | 21 | 588 | | 92 | 342 | | 77 | 317 | |
| Prop LTs | 0.000 | | | 0.000 | | | 0.000 | | | 0.000 | | |
| Prop RTs | 0.070 | | | 0.046 | | | 0.158 | | | 0.252 | | |

Saturation Flow Rate (see Exhibit 16-7 to determine the adjustment factors)

| LG | Eastbound L | Eastbound TR | | Westbound L | Westbound TR | | Northbound L | Northbound TR | | Southbound L | Southbound TR | |
|---|---|---|---|---|---|---|---|---|---|---|---|---|
| So | 1900 | 1900 | | 1900 | 1900 | | 1900 | 1900 | | 1900 | 1900 | |
| Lanes | 1 | 1 | 0 | 1 | 1 | 0 | 1 | 1 | 0 | 1 | 1 | 0 |
| fW | 1.000 | 1.000 | | 1.000 | 1.000 | | 1.000 | 1.000 | | 1.000 | 1.000 | |
| fHV | 1.000 | 1.000 | | 1.000 | 1.000 | | 1.000 | 1.000 | | 1.000 | 1.000 | |
| fG | 1.000 | 1.000 | | 1.000 | 1.000 | | 1.000 | 1.000 | | 1.000 | 1.000 | |
| fP | 1.000 | 1.000 | | 1.000 | 1.000 | | 1.000 | 1.000 | | 1.000 | 1.000 | |
| fBB | 1.000 | 1.000 | | 1.000 | 1.000 | | 1.000 | 1.000 | | 1.000 | 1.000 | |
| fA | 1.000 | 1.000 | | 1.000 | 1.000 | | 1.000 | 1.000 | | 1.000 | 1.000 | |
| fLU | 1.000 | 1.000 | | 1.000 | 1.000 | | 1.000 | 1.000 | | 1.000 | 1.000 | |
| fRT | | 0.990 | | | 0.993 | | | 0.976 | | | 0.962 | |
| fLT | 0.950 | 1.000 | | 0.950 | 1.000 | | 0.950 | 1.000 | | 0.950 | 1.000 | |
| Sec. | | | | | | | | | | | | |
| fLpb | 1.000 | 1.000 | | 1.000 | 1.000 | | 1.000 | 1.000 | | 1.000 | 1.000 | |
| fRpb | | 1.000 | | | 1.000 | | | 1.000 | | | 1.000 | |
| S | 1805 | 1880 | | 1805 | 1887 | | 1805 | 1855 | | 1805 | 1828 | |
| Sec. | | | | | | | | | | | | |

## CAPACITY AND LOS WORKSHEET

Capacity Analysis and Lane Group Capacity

| Appr/ Mvmt | Lane Group | Adj Flow Rate (v) | Adj Sat Flow Rate (s) | Flow Ratio (v/s) | Green Ratio (g/C) | --Lane Group-- Capacity (c) | v/c Ratio |
|---|---|---|---|---|---|---|---|
| Eastbound | | | | | | | |
| Prot | | | | | | | |
| Perm | | | | | | | |
| Left | L | 103 | 1805 | # 0.06 | 0.04 | 68 | 1.51 |
| Prot | | | | | | | |
| Perm | | | | | | | |
| Thru | TR | 388 | 1880 | # 0.21 | 0.19 | 356 | 1.09 |
| Right | | | | | | | |
| Westbound | | | | | | | |
| Prot | | | | | | | |
| Perm | | | | | | | |
| Left | L | 21 | 1805 | # 0.01 | 0.02 | 35 | 0.60 |
| Prot | | | | | | | |
| Perm | | | | | | | |
| Thru | TR | 588 | 1887 | # 0.31 | 0.17 | 330 | 1.78 |
| Right | | | | | | | |
| Northbound | | | | | | | |
| Prot | | | | | | | |
| Perm | | | | | | | |
| Left | L | 92 | 1805 | # 0.05 | 0.03 | 48 | 1.92 |
| Prot | | | | | | | |
| Perm | | | | | | | |
| Thru | TR | 342 | 1855 | # 0.18 | 0.10 | 192 | 1.78 |
| Right | | | | | | | |
| Southbound | | | | | | | |
| Prot | | | | | | | |
| Perm | | | | | | | |
| Left | L | 77 | 1805 | # 0.04 | 0.02 | 35 | 2.20 |
| Prot | | | | | | | |
| Perm | | | | | | | |
| Thru | TR | 317 | 1828 | # 0.17 | 0.14 | 261 | 1.21 |
| Right | | | | | | | |

Sum of flow ratios for critical lane groups, Yc = Sum (v/s) = 1.04
Total lost time per cycle, L = 14.00 sec
Critical flow rate to capacity ratio, Xc = (Yc)(C)/(C-L) = 1.38

Control Delay and LOS Determination

| Appr/ Lane Grp | Ratios v/c | Ratios g/C | Unf Del d1 | Prog Adj Fact | Lane Grp Cap | Incremental Factor k | Del d2 | Res Del d3 | Lane Group Delay | Lane Group LOS | Approach Delay | Approach LOS |
|---|---|---|---|---|---|---|---|---|---|---|---|---|
| Eastbound | | | | | | | | | | | | |
| L | 1.51 | 0.04 | 27.0 | 1.000 | 68 | 0.50 | 293.2 | 0.0 | 320.1 | F | | |
| TR | 1.09 | 0.19 | 22.7 | 1.000 | 356 | 0.50 | 74.0 | 0.0 | 96.7 | F | 143.5 | F |
| Westbound | | | | | | | | | | | | |
| L | 0.60 | 0.02 | 27.2 | 1.000 | 35 | 0.50 | 58.3 | 0.0 | 85.5 | F | | |
| TR | 1.78 | 0.17 | 23.1 | 1.000 | 330 | 0.50 | 363.8 | 0.0 | 386.9 | F | 376.5 | F |
| Northbound | | | | | | | | | | | | |
| L | 1.92 | 0.03 | 27.3 | 1.000 | 48 | 0.50 | 479.9 | 0.0 | 507.1 | F | | |
| TR | 1.78 | 0.10 | 25.1 | 1.000 | 192 | 0.50 | 371.8 | 0.0 | 396.9 | F | 420.3 | F |
| Southbound | | | | | | | | | | | | |
| L | 2.20 | 0.02 | 27.5 | 1.000 | 35 | 0.50 | 621.9 | 0.0 | 649.3 | F | | |
| TR | 1.21 | 0.14 | 24.0 | 1.000 | 261 | 0.50 | 126.4 | 0.0 | 150.4 | F | 247.9 | F |

Intersection delay = 300.8 (sec/veh)  Intersection LOS = F

## SUPPLEMENTAL PERMITTED LT WORKSHEET
for exclusive lefts

Input

| | EB | WB | NB | SB |
|---|---|---|---|---|
| Opposed by Single(S) or Multiple(M) lane approach | | | | |
| Cycle length, C  56.0 sec | | | | |
| Total actual green time for LT lane group, G (s) | | | | |
| Effective permitted green time for LT lane group, g(s) | | | | |
| Opposing effective green time, go (s) | | | | |
| Number of lanes in LT lane group, N | | | | |
| Number of lanes in opposing approach, No | | | | |
| Adjusted LT flow rate, VLT (veh/h) | | | | |
| Proportion of LT in LT lane group, PLT | | | | |
| Proportion of LT in opposing flow, PLTo | | | | |
| Adjusted opposing flow rate, Vo (veh/h) | | | | |
| Lost time for LT lane group, tL | | | | |
| Computation | | | | |
| LT volume per cycle, LTC=VLTC/3600 | | | | |
| Opposing lane util. factor, fLUo | 1.000 | 1.000 | 1.000 | 1.000 |
| Opposing flow, Volc=VoC/[3600(No)fLUo] (veh/ln/cyc) | | | | |
| gf=G[exp(- a * (LTC ** b)]-tl, gf<=g | | | | |
| Opposing platoon ratio, Rpo (refer Exhibit 16-11) | | | | |
| Opposing Queue Ratio, qro=Max[1-Rpo(go/C),0] | | | | |
| gq, (see Exhibit C16-4,5,6,7,8) | | | | |
| gu=g-gq if gq>=gf, or = g-gf if gq<gf | | | | |
| n=Max(gq-gf)/2,0) | | | | |
| PTHo=1-PLTo | | | | |
| PL*=PLT[1+(N-1)g/(gf+gu/EL1+4.24)] | | | | |
| EL1 (refer to Exhibit C16-3) | | | | |
| EL2=Max((1-Ptho**n)/Plto, 1.0) | | | | |
| fmin=2(1+PL)/g or fmin=2(1+Pl)/g | | | | |
| gdiff=max(gq-gf,0) | | | | |
| fm=[gf/g]+[gu/g]/[1+PL(EL1-1)], (min=fmin;max=1.00) | | | | |
| flt=fm=[gf/g]+[gu/g]/[1+PL(EL1-1)]+[gdiff/g]/[1+PL(EL2-1)],(fmin<=fm<=1.00) | | | | |
| or flt=[fm+0.91(N-1)]/N** | | | | |
| Left-turn adjustment, fLT | | | | |

For special case of single-lane approach opposed by multilane approach, see text.
* If Pl>=1 for shared left-turn lanes with N>1, then assume de-facto left-turn lane and redo calculations.
** For permitted left-turns with multiple exclusive left-turn lanes, flt=fm.
For special case of multilane approach opposed by single-lane approach or when gf>gq, see text.

## SUPPLEMENTAL PERMITTED LT WORKSHEET
for shared lefts

Input

| | EB | WB | NB | SB |
|---|---|---|---|---|
| Opposed by Single(S) or Multiple(M) lane approach | | | | |
| Cycle length, C  56.0 sec | | | | |
| Total actual green time for LT lane group, G (s) | | | | |
| Effective permitted green time for LT lane group, g(s) | | | | |
| Opposing effective green time, go (s) | | | | |
| Number of lanes in LT lane group, N | | | | |
| Number of lanes in opposing approach, No | | | | |
| Adjusted LT flow rate, VLT (veh/h) | | | | |
| Proportion of LT in LT lane group, PLT | 0.000 | 0.000 | 0.000 | 0.000 |
| Proportion of LT in opposing flow, PLTo | | | | |
| Adjusted opposing flow rate, Vo (veh/h) | | | | |
| Lost time for LT lane group, tL | | | | |
| Computation | | | | |
| LT volume per cycle, LTC=VLTC/3600 | | | | |
| Opposing lane util. factor, fLUo | 1.000 | 1.000 | 1.000 | 1.000 |
| Opposing flow, Volc=VoC/[3600(No)fLUo] (veh/ln/cyc) | | | | |
| gf=G[exp(- a * (LTC ** b)]-tl, gf<=g | | | | |
| Opposing platoon ratio, Rpo (refer Exhibit 16-11) | | | | |
| Opposing Queue Ratio, qro=Max[1-Rpo(go/C),0] | | | | |
| gq, (see Exhibit C16-4,5,6,7,8) | | | | |
| gu=g-gq if gq>=gf, or = g-gf if gq<gf | | | | |
| n=Max(gq-gf)/2,0) | | | | |
| PTHo=1-PLTo | | | | |
| PL*=PLT[1+(N-1)g/(gf+gu/EL1+4.24)] | | | | |
| EL1 (refer to Exhibit C16-3) | | | | |
| EL2=Max((1-Ptho**n)/Plto, 1.0) | | | | |
| fmin=2(1+PL)/g or fmin=2(1+Pl)/g | | | | |
| gdiff=max(gq-gf,0) | | | | |
| fm=[gf/g]+[gu/g]/[1+PL(EL1-1)], (min=fmin;max=1.00) | | | | |
| flt=fm=[gf/g]+[gu/g]/[1+PL(EL1-1)]+[gdiff/g]/[1+PL(EL2-1)],(fmin<=fm<=1.00) | | | | |
| or flt=[fm+0.91(N-1)]/N** | | | | |
| Left-turn adjustment, fLT | | | | |

For special case of single-lane approach opposed by multilane approach, see text.
* If Pl>=1 for shared left-turn lanes with N>1, then assume de-facto left-turn lane and redo calculations.
** For permitted left-turns with multiple exclusive left-turn lanes, flt=fm.
For special case of multilane approach opposed by single-lane approach or when gf>gq, see text.

## SUPPLEMENTAL PEDESTRIAN-BICYCLE EFFECTS WORKSHEET

| Permitted Left Turns | EB | WB | NB | SB |
|---|---|---|---|---|
| Effective pedestrian green time, gp (s) | | | | |
| Conflicting pedestrian volume, Vped (p/h) | | | | |
| Pedestrian flow rate, Vpedg (p/h) | | | | |
| OCCpedg | | | | |
| Opposing queue clearing green, gq (s) | | | | |
| Eff. ped. green consumed by opp. veh. queue, gq/gp | | | | |
| OCCpedu | | | | |
| Opposing flow rate, Vo (veh/h) | | | | |
| OCCr | | | | |
| Number of cross-street receiving lanes, Nrec | | | | |
| Number of turning lanes, Nturn | | | | |
| ApbT | | | | |
| Proportion of left turns, PLT | | | | |
| Proportion of left turns using protected phase, PLTA | | | | |
| Left-turn adjustment, fLpb | | | | |
| Permitted Right Turns | | | | |
| Effective pedestrian green time, gp (s) | | | | |
| Conflicting pedestrian volume, Vped (p/h) | | | | |
| Conflicting bicycle volume, Vbic (bicycles/h) | | | | |
| Vpedg | | | | |
| OCCpedg | | | | |
| Effective green, g (s) | | | | |
| Vbicg | | | | |

OCCbicg
OCCr
Number of cross-street receiving lanes, Nrec
Number of turning lanes, Nturn
ApbT
Proportion right-turns, PRT
Proportion right-turns using protected phase, PRTA
Right turn adjustment, fRpb

## SUPPLEMENTAL UNIFORM DELAY WORKSHEET

| | EBLT | WBLT | NBLT | SBLT |
|---|---|---|---|---|
| Cycle length, C 56.0 sec | | | | |
| Adj. LT vol from Vol Adjustment Worksheet, v | | | | |
| v/c ratio from Capacity Worksheet, X | | | | |
| Protected phase effective green interval, g (s) | | | | |
| Opposing queue effective green interval, gq | | | | |
| Unopposed green interval, gu | | | | |
| Red time r=(C-g-gq-gu) | | | | |
| Arrival rate, qa=v/(3600(max[X,1.0])) | | | | |
| Protected ph. departure rate, Sp=s/3600 | | | | |
| Permitted ph. departure rate, Ss=s(gq+gu)/(gu*3600) | | | | |
| XPerm | | | | |
| XProt | | | | |
| Case | | | | |
| Queue at beginning of green arrow, Qa | | | | |
| Queue at beginning of unsaturated green, Qu | | | | |
| Residual queue, Qr | | | | |
| Uniform Delay, d1 | | | | |

## DELAY/LOS WORKSHEET WITH INITIAL QUEUE

| Appr/ Lane Group | Initial Unmet Demand Q veh | Dur. Unmet Demand t hrs. | Uniform Delay Unadj. ds | Uniform Delay Adj. d1 sec | Initial Queue Param. u | Final Unmet Demand Q veh | Initial Queue Delay d3 sec | Lane Group Delay d sec |
|---|---|---|---|---|---|---|---|---|
| Eastbound | | | | | | | | |
| L | 0.0 | 0.00 | 27.0 | 27.0 | 0.00 | 8.8 | 0.0 | 320.1 |
| TR | 0.0 | 0.00 | 22.7 | 22.7 | 0.00 | 8.0 | 0.0 | 96.7 |
| | 0.0 | | | | | | 0.0 | |
| Westbound | | | | | | | | |
| L | 0.0 | 0.00 | 27.5 | 27.2 | 0.00 | 0.0 | 0.0 | 85.5 |
| TR | 0.0 | 0.00 | 23.1 | 23.1 | 0.00 | 64.5 | 0.0 | 386.9 |
| | 0.0 | | | | | | 0.0 | |
| Northbound | | | | | | | | |
| L | 0.0 | 0.00 | 27.3 | 27.3 | 0.00 | 11.0 | 0.0 | 507.1 |
| TR | 0.0 | 0.00 | 25.1 | 25.1 | 0.00 | 37.5 | 0.0 | 396.9 |
| | 0.0 | | | | | | 0.0 | |
| Southbound | | | | | | | | |
| L | 0.0 | 0.00 | 27.5 | 27.5 | 0.00 | 10.5 | 0.0 | 649.3 |
| TR | 0.0 | 0.00 | 24.0 | 24.0 | 0.00 | 14.0 | 0.0 | 150.4 |
| | 0.0 | | | | | | 0.0 | |

Intersection Delay 300.8 sec/veh Intersection LOS F

## BACK OF QUEUE WORKSHEET

| | Eastbound | | Westbound | | Northbound | | Southbound | |
|---|---|---|---|---|---|---|---|---|
| LaneGroup | L | TR | L | TR | L | TR | L | TR |
| Init Queue | 0.0 | 0.0 | 0.0 | 0.0 | 0.0 | 0.0 | 0.0 | 0.0 |
| Flow Rate | 103 | 388 | 21 | 588 | 92 | 342 | 77 | 317 |
| So | 1900 | 1900 | 1900 | 1900 | 1900 | 1900 | 1900 | 1900 |
| No.Lanes | 1 | 1 0 | 1 | 1 0 | 1 | 1 0 | 1 | 1 0 |
| SL | 1805 | 1880 | 1805 | 1887 | 1805 | 1855 | 1805 | 1828 |
| LnCapacity | 68 | 356 | 35 | 330 | 48 | 192 | 35 | 261 |
| Flow Ratio | 0.1 | 0.2 | 0.0 | 0.3 | 0.1 | 0.2 | 0.0 | 0.2 |
| v/c Ratio | 1.51 | 1.09 | 0.60 | 1.78 | 1.92 | 1.78 | 2.20 | 1.21 |
| Grn Ratio | 0.04 | 0.19 | 0.02 | 0.17 | 0.03 | 0.10 | 0.02 | 0.14 |
| I Factor | | 1.000 | | 1.000 | | 1.000 | | 1.000 |
| AT or PVG | 3 | 3 | 3 | 3 | 3 | 3 | 3 | 3 |
| Pltn Ratio | 1.00 | 1.00 | 1.00 | 1.00 | 1.00 | 1.00 | 1.00 | 1.00 |
| PF2 | 1.00 | 1.00 | 1.00 | 1.00 | 1.00 | 1.00 | 1.00 | 1.00 |
| Q1 | 1.6 | 6.0 | 0.3 | 9.1 | 1.4 | 5.3 | 1.2 | 4.9 |
| kB | 0.1 | 0.4 | 0.1 | 0.4 | 0.1 | 0.3 | 0.1 | 0.3 |
| Q2 | 4.7 | 6.8 | 0.1 | 33.1 | 5.7 | 19.3 | 5.4 | 8.5 |
| Q Average | 6.3 | 12.9 | 0.4 | 42.2 | 7.1 | 24.6 | 6.6 | 13.4 |
| Q Spacing | 25.0 | 25.0 | 25.0 | 25.0 | 25.0 | 25.0 | 25.0 | 25.0 |
| Q Storage | 0 | 0 | 0 | 0 | 0 | 0 | 0 | 0 |
| Q S Ratio | | | | | | | | |
| 70th Percentile Output: | | | | | | | | |
| fB% | 1.2 | 1.2 | 1.3 | 1.2 | 1.2 | 1.2 | 1.2 | 1.2 |
| BOQ | 7.8 | 15.5 | 0.6 | 50.7 | 8.7 | 29.6 | 8.1 | 16.2 |
| QSRatio | | | | | | | | |
| 85th Percentile Output: | | | | | | | | |
| fB% | 1.5 | 1.4 | 1.7 | 1.4 | 1.5 | 1.4 | 1.5 | 1.4 |
| BOQ | 9.4 | 18.3 | 0.7 | 59.1 | 10.5 | 34.6 | 9.8 | 19.1 |
| QSRatio | | | | | | | | |
| 90th Percentile Output: | | | | | | | | |
| fB% | 1.6 | 1.5 | 2.0 | 1.5 | 1.6 | 1.5 | 1.6 | 1.5 |
| BOQ | 10.4 | 19.8 | 0.9 | 63.4 | 11.6 | 37.1 | 10.8 | 20.6 |
| QSRatio | | | | | | | | |
| 95th Percentile Output: | | | | | | | | |
| fB% | 1.9 | 1.7 | 2.5 | 1.6 | 1.8 | 1.6 | 1.9 | 1.7 |
| BOQ | 11.9 | 21.6 | 1.1 | 67.6 | 13.1 | 39.6 | 12.3 | 22.4 |
| QSRatio | | | | | | | | |
| 98th Percentile Output: | | | | | | | | |
| fB% | 2.1 | 1.8 | 3.1 | 1.7 | 2.1 | 1.7 | 2.1 | 1.8 |
| BOQ | 13.4 | 23.3 | 1.3 | 71.8 | 14.7 | 42.2 | 13.8 | 24.2 |
| QSRatio | | | | | | | | |

## ERROR MESSAGES

No errors to report.

HCS+: Signalized Intersections Release 5.2

Analyst: BEW
Agency: De Luz
Date: 3/6/2008
Period: PM peak future
Project ID: Hilo entertainment center job# 560-01-08, kemapmf
E/W St: Kekuanaoa St

Inter.: 4 way
Area Type: All other areas
Jurisd: Hawaii County
Year : 2008
N/S St: Manono St

## SIGNALIZED INTERSECTION SUMMARY

| | Eastbound | | | Westbound | | | Northbound | | | Southbound | | |
|---|---|---|---|---|---|---|---|---|---|---|---|---|
| | L | T | R | L | T | R | L | T | R | L | T | R |
| No. Lanes | 1 | 1 | 0 | 1 | 1 | 0 | 1 | 1 | 0 | 1 | 1 | 0 |
| LGConfig | L | TR | | L | TR | | L | TR | | L | TR | |
| Volume | 137 | 473 | 58 | 97 | 468 | 42 | 88 | 332 | 54 | 106 | 264 | 85 |
| Lane Width | 12.0 | 12.0 | | 12.0 | 12.0 | | 12.0 | 12.0 | | 12.0 | 12.0 | |
| RTOR Vol | | | 0 | | | 0 | | | 0 | | | 0 |

Duration 0.25 Area Type: All other areas

## Signal Operations

| Phase Combination | 1 | 2 | 3 | 4 | 5 | 6 | 7 | 8 |
|---|---|---|---|---|---|---|---|---|
| EB Left | p | | | | NB Left | p | | |
| Thru | | p | | | Thru | | p | |
| Right | | p | | | Right | | p | |
| Peds | | | | | Peds | | | |
| WB Left | | | p | | SB Left | | | p |
| Thru | | | | p | Thru | | | |
| Right | | | | p | Right | | | |
| Peds | | | | | Peds | | | |
| NB Right | | | | | EB Right | | | |
| SB Right | | | | | WB Right | | | |
| Green | 4.8 | 13.3 | 2.6 | 10.3 | 2.2 | 6.9 | 1.7 | 8.2 |
| Yellow | 1.0 | 1.0 | 1.0 | 1.0 | 1.0 | 1.0 | 1.0 | 1.0 |
| All Red | 1.0 | 1.0 | 1.0 | 1.0 | 1.0 | 1.0 | 1.0 | 1.0 |

Cycle Length: 66.0 secs

## Intersection Performance Summary

| Appr/ Lane Grp | Lane Group Capacity | Adj Sat Flow Rate (s) | Ratios v/c | Ratios g/C | Lane Group Delay | Lane Group LOS | Approach Delay | Approach LOS |
|---|---|---|---|---|---|---|---|---|
| Eastbound | | | | | | | | |
| L | 131 | 1805 | 1.16 | 0.07 | 158.7 | F | | |
| TR | 377 | 1869 | 1.56 | 0.20 | 293.2 | F | 265.6 | F |
| Westbound | | | | | | | | |
| L | 71 | 1805 | 1.52 | 0.04 | 325.3 | F | | |
| TR | 293 | 1876 | 1.94 | 0.16 | 461.0 | F | 439.3 | F |
| Northbound | | | | | | | | |
| L | 60 | 1805 | 1.63 | 0.03 | 380.2 | F | | |
| TR | 194 | 1860 | 2.21 | 0.10 | 591.1 | F | 551.9 | F |
| Southbound | | | | | | | | |
| L | 46 | 1805 | 2.57 | 0.03 | 795.7 | F | | |
| TR | 227 | 1831 | 1.70 | 0.12 | 364.2 | F | 465.0 | F |

Intersection Delay = 416.2 (sec/veh) Intersection LOS = F

HCS+: Signalized Intersections Release 5.2

Phone:
E-Mail:
Fax:

## OPERATIONAL ANALYSIS

Analyst: BEW
Agency/Co.: De Luz
Date Performed: 3/6/2008
Analysis Time Period: PM peak future
Intersection: 4 way
Area Type: All other areas
Jurisdiction: Hawaii County
Analysis Year: 2008
Project ID: Hilo entertainment center job# 560-01-08, kemapmf
E/W St: Kekuanaoa St N/S St: Manono St

## VOLUME DATA

| | Eastbound | | | Westbound | | | Northbound | | | Southbound | | |
|---|---|---|---|---|---|---|---|---|---|---|---|---|
| | L | T | R | L | T | R | L | T | R | L | T | R |
| Volume | 137 | 473 | 58 | 97 | 468 | 42 | 88 | 332 | 54 | 106 | 264 | 85 |
| % Heavy Veh | 0 | 0 | 0 | 0 | 0 | 0 | 0 | 0 | 0 | 0 | 0 | 0 |
| PHF | 0.90 | 0.90 | 0.90 | 0.90 | 0.90 | 0.90 | 0.90 | 0.90 | 0.90 | 0.90 | 0.90 | 0.90 |
| PK 15 Vol | 38 | 131 | 16 | 27 | 130 | 12 | 24 | 92 | 15 | 29 | 73 | 24 |
| Hi Ln Vol | | | | | | | | | | | | |
| % Grade | | 0 | | | 0 | | | 0 | | | 0 | |
| Ideal Sat | 1900 | 1900 | | 1900 | 1900 | | 1900 | 1900 | | 1900 | 1900 | |
| ParkExist | | | | | | | | | | | | |
| NumPark | | | | | | | | | | | | |
| No. Lanes | 1 | 1 | 0 | 1 | 1 | 0 | 1 | 1 | 0 | 1 | 1 | 0 |
| LGConfig | L | TR | | L | TR | | L | TR | | L | TR | |
| Lane Width | 12.0 | 12.0 | | 12.0 | 12.0 | | 12.0 | 12.0 | | 12.0 | 12.0 | |
| RTOR Vol | | | 0 | | | 0 | | | 0 | | | 0 |
| Adj Flow | 152 | 590 | | 108 | 567 | | 98 | 429 | | 118 | 387 | |
| %InSharedLn | | | | | | | | | | | | |
| Prop LTs | | 0.000 | | | 0.000 | | | 0.000 | | | 0.000 | |
| Prop RTs | | 0.108 | | | 0.083 | | | 0.140 | | | 0.243 | |
| Peds Bikes | | 0 | | | 0 | | | 0 | | | 0 | |
| Buses | 0 | 0 | | 0 | 0 | | 0 | 0 | | 0 | 0 | |
| %InProtPhase | | | | | | | | | | | | |

Duration 0.25 Area Type: All other areas

## OPERATING PARAMETERS

| | Eastbound | | | Westbound | | | Northbound | | | Southbound | | |
|---|---|---|---|---|---|---|---|---|---|---|---|---|
| | L | T | R | L | T | R | L | T | R | L | T | R |
| Init Unmet | 0.0 | 0.0 | | 0.0 | 0.0 | | 0.0 | 0.0 | | 0.0 | 0.0 | |
| Arriv. Type | 3 | 3 | | 3 | 3 | | 3 | 3 | | 3 | 3 | |
| Unit Ext. | 3.0 | 3.0 | | 3.0 | 3.0 | | 3.0 | 3.0 | | 3.0 | 3.0 | |
| I Factor | | 1.000 | | | 1.000 | | | 1.000 | | | 1.000 | |
| Lost Time | 2.0 | 2.0 | | 2.0 | 2.0 | | 2.0 | 2.0 | | 2.0 | 2.0 | |
| Ext of g | 2.0 | 2.0 | | 2.0 | 2.0 | | 2.0 | 2.0 | | 2.0 | 2.0 | |
| Ped Min g | | 3.2 | | | 3.2 | | | 3.2 | | | 3.2 | |

## PHASE DATA

| Phase Combination | 1 | 2 | 3 | 4 | 5 | 6 | 7 | 8 |
|---|---|---|---|---|---|---|---|---|
| EB Left | P | | | | NB Left | P | | |
| Thru | | P | | | Thru | | P | |
| Right | | P | | | Right | | P | |
| Peds | | | | | Peds | | | |
| WB Left | | | P | | SB Left | | | P |
| Thru | | | | P | Thru | | | | P |
| Right | | | | P | Right | | | | P |
| Peds | | | | | Peds | | | |
| NB Right | | | | | EB Right | | | |
| SB Right | | | | | WB Right | | | |
| Green | 4.8 | 13.3 | 2.6 | 10.3 | 2.2 | 6.9 | 1.7 | 8.2 |
| Yellow | 1.0 | 1.0 | 1.0 | 1.0 | 1.0 | 1.0 | 1.0 | 1.0 |
| All Red | 1.0 | 1.0 | 1.0 | 1.0 | 1.0 | 1.0 | 1.0 | 1.0 |

Cycle Length: 66.0 secs

## VOLUME ADJUSTMENT AND SATURATION FLOW WORKSHEET

Volume Adjustment

| | Eastbound | | | Westbound | | | Northbound | | | Southbound | | |
|---|---|---|---|---|---|---|---|---|---|---|---|---|
| | L | T | R | L | T | R | L | T | R | L | T | R |
| Volume, V | 137 | 473 | 58 | 97 | 468 | 42 | 88 | 332 | 54 | 106 | 264 | 85 |
| PHF | 0.90 | 0.90 | 0.90 | 0.90 | 0.90 | 0.90 | 0.90 | 0.90 | 0.90 | 0.90 | 0.90 | 0.90 |
| Adj flow | 152 | 526 | 64 | 108 | 520 | 47 | 98 | 369 | 60 | 118 | 293 | 94 |
| No. Lanes | 1 | 1 | 0 | 1 | 1 | 0 | 1 | 1 | 0 | 1 | 1 | 0 |
| Lane group | L | TR | | L | TR | | L | TR | | L | TR | |
| Adj flow | 152 | 590 | | 108 | 567 | | 98 | 429 | | 118 | 387 | |
| Prop LTs | 0.000 | | | 0.000 | | | 0.000 | | | 0.000 | | |
| Prop RTs | 0.108 | | | 0.083 | | | 0.140 | | | 0.243 | | |

Saturation Flow Rate (see Exhibit 16-7 to determine the adjustment factors)

| | Eastbound | | | Westbound | | | Northbound | | | Southbound | | |
|---|---|---|---|---|---|---|---|---|---|---|---|---|
| LG | L | TR | | L | TR | | L | TR | | L | TR | |
| So | 1900 | 1900 | | 1900 | 1900 | | 1900 | 1900 | | 1900 | 1900 | |
| Lanes | 1 | 1 | 0 | 1 | 1 | 0 | 1 | 1 | 0 | 1 | 1 | 0 |
| fW | 1.000 | 1.000 | | 1.000 | 1.000 | | 1.000 | 1.000 | | 1.000 | 1.000 | |
| fHV | 1.000 | 1.000 | | 1.000 | 1.000 | | 1.000 | 1.000 | | 1.000 | 1.000 | |
| fG | 1.000 | 1.000 | | 1.000 | 1.000 | | 1.000 | 1.000 | | 1.000 | 1.000 | |
| fP | 1.000 | 1.000 | | 1.000 | 1.000 | | 1.000 | 1.000 | | 1.000 | 1.000 | |
| fBB | 1.000 | 1.000 | | 1.000 | 1.000 | | 1.000 | 1.000 | | 1.000 | 1.000 | |
| fA | 1.000 | 1.000 | | 1.000 | 1.000 | | 1.000 | 1.000 | | 1.000 | 1.000 | |
| fLU | 1.000 | 1.000 | | 1.000 | 1.000 | | 1.000 | 1.000 | | 1.000 | 1.000 | |
| fRT | | 0.984 | | | 0.988 | | | 0.979 | | | 0.964 | |
| fLT | 0.950 | 1.000 | | 0.950 | 1.000 | | 0.950 | 1.000 | | 0.950 | 1.000 | |
| Sec. | | | | | | | | | | | | |
| fLpb | 1.000 | 1.000 | | 1.000 | 1.000 | | 1.000 | 1.000 | | 1.000 | 1.000 | |
| fRpb | | 1.000 | | | 1.000 | | | 1.000 | | | 1.000 | |
| S | 1805 | 1869 | | 1805 | 1876 | | 1805 | 1860 | | 1805 | 1831 | |
| Sec. | | | | | | | | | | | | |

## CAPACITY AND LOS WORKSHEET

Capacity Analysis and Lane Group Capacity

| Appr/ Mvmt | Lane Group | Adj Flow Rate (v) | Adj Sat Flow Rate (s) | Flow Ratio (v/s) | Green Ratio (g/C) | --Lane Group-- Capacity (c) | v/c Ratio |
|---|---|---|---|---|---|---|---|
| Eastbound | | | | | | | |
| Prot | | | | | | | |
| Perm | | | | | | | |
| Left | L | 152 | 1805 | # 0.08 | 0.07 | 131 | 1.16 |
| Prot | | | | | | | |
| Perm | | | | | | | |
| Thru | TR | 590 | 1869 | # 0.32 | 0.20 | 377 | 1.56 |
| Right | | | | | | | |
| Westbound | | | | | | | |
| Prot | | | | | | | |
| Perm | | | | | | | |
| Left | L | 108 | 1805 | # 0.06 | 0.04 | 71 | 1.52 |
| Prot | | | | | | | |
| Perm | | | | | | | |
| Thru | TR | 567 | 1876 | # 0.30 | 0.16 | 293 | 1.94 |
| Right | | | | | | | |
| Northbound | | | | | | | |
| Prot | | | | | | | |
| Perm | | | | | | | |
| Left | L | 98 | 1805 | # 0.05 | 0.03 | 60 | 1.63 |
| Prot | | | | | | | |
| Perm | | | | | | | |
| Thru | TR | 429 | 1860 | # 0.23 | 0.10 | 194 | 2.21 |
| Right | | | | | | | |
| Southbound | | | | | | | |
| Prot | | | | | | | |
| Perm | | | | | | | |
| Left | L | 118 | 1805 | # 0.07 | 0.03 | 46 | 2.57 |
| Prot | | | | | | | |
| Perm | | | | | | | |
| Thru | TR | 387 | 1831 | # 0.21 | 0.12 | 227 | 1.70 |
| Right | | | | | | | |

Sum of flow ratios for critical lane groups, Yc = Sum (v/s) = 1.32
Total lost time per cycle, L = 14.00 sec
Critical flow rate to capacity ratio, Xc = (Yc)(C)/(C-L) = 1.68

Control Delay and LOS Determination

| Appr/ Lane Grp | Ratios v/c | Ratios g/C | Unf Del d1 | Prog Adj Fact | Lane Grp Cap | Incremental Factor k | Incremental Del d2 | Res Del d3 | Lane Group Delay | Lane Group LOS | Approach Delay | Approach LOS |
|---|---|---|---|---|---|---|---|---|---|---|---|---|
| Eastbound | | | | | | | | | | | | |
| L | 1.16 | 0.07 | 30.6 | 1.000 | 131 | 0.50 | 128.1 | 0.0 | 158.7 | F | | |
| TR | 1.56 | 0.20 | 26.4 | 1.000 | 377 | 0.50 | 266.8 | 0.0 | 293.2 | F | 265.6 | F |
| Westbound | | | | | | | | | | | | |
| L | 1.52 | 0.04 | 31.7 | 1.000 | 71 | 0.50 | 293.6 | 0.0 | 325.3 | F | | |
| TR | 1.94 | 0.16 | 27.9 | 1.000 | 293 | 0.50 | 433.2 | 0.0 | 461.0 | F | 439.3 | F |
| Northbound | | | | | | | | | | | | |
| L | 1.63 | 0.03 | 31.9 | 1.000 | 60 | 0.50 | 348.3 | 0.0 | 380.2 | F | | |
| TR | 2.21 | 0.10 | 29.5 | 1.000 | 194 | 0.50 | 561.5 | 0.0 | 591.1 | F | 551.9 | F |
| Southbound | | | | | | | | | | | | |
| L | 2.57 | 0.03 | 32.2 | 1.000 | 46 | 0.50 | 763.5 | 0.0 | 795.7 | F | | |
| TR | 1.70 | 0.12 | 28.9 | 1.000 | 227 | 0.50 | 335.3 | 0.0 | 364.2 | F | 465.0 | F |

Intersection delay = 416.2 (sec/veh)  Intersection LOS = F

## SUPPLEMENTAL PERMITTED LT WORKSHEET
for exclusive lefts

Input

| | EB | WB | NB | SB |
|---|---|---|---|---|
| Opposed by Single(S) or Multiple(M) lane approach | | | | |
| Cycle length, C  66.0 sec | | | | |
| Total actual green time for LT lane group, G (s) | | | | |
| Effective permitted green time for LT lane group, g(s) | | | | |
| Opposing effective green time, go (s) | | | | |
| Number of lanes in LT lane group, N | | | | |
| Number of lanes in opposing approach, No | | | | |
| Adjusted LT flow rate, VLT (veh/h) | | | | |
| Proportion of LT in LT lane group, PLT | | | | |
| Proportion of LT in opposing flow, PLTo | | | | |
| Adjusted opposing flow rate, Vo (veh/h) | | | | |
| Lost time for LT lane group, tL | | | | |
| Computation | | | | |
| LT volume per cycle, LTC=VLTC/3600 | | | | |
| Opposing lane util. factor, fLUo | 1.000 | 1.000 | 1.000 | 1.000 |

Opposing flow, Volc=VoC/[3600(No)fLUo] (veh/ln/cyc)
gf=G[exp(- a * (LTC ** b)]-tl, gf<=g
Opposing platoon ratio, Rpo (refer Exhibit 16-11)
Opposing Queue Ratio, qro=Max[1-Rpo(go/C),0]
gq, (see Exhibit C16-4,5,6,7,8)
gu=g-gq if gq>=gf, or = g-gf if gq<gf
n=Max(gq-gf)/2,0)
PTHo=1-PLTo
PL*=PLT[1+(N-1)g/(gf+gu/EL1+4.24)]
EL1 (refer to Exhibit C16-3)
EL2=Max((1-Ptho**n)/Plto, 1.0)
fmin=2(1+PL)/g  or  fmin=2(1+Pl)/g
gdiff=max(gq-gf,0)
fm=[gf/g]+[gu/g]/[1+PL(EL1-1)], (min=fmin;max=1.00)
flt=fm=[gf/g]+[gu/g]/[1+PL(EL1-1)]+[gdiff/g]/[1+PL(EL2-1)],(fmin<=fm<=1.00)
or flt=[fm+0.91(N-1)]/N**
Left-turn adjustment, fLT

For special case of single-lane approach opposed by multilane approach, see text.
* If Pl>=1 for shared left-turn lanes with N>1, then assume de-facto left-turn lane and redo calculations.
** For permitted left-turns with multiple exclusive left-turn lanes, flt=fm.
For special case of multilane approach opposed by single-lane approach or when gf>gq, see text.

## SUPPLEMENTAL PERMITTED LT WORKSHEET
for shared lefts

Input

| | EB | WB | NB | SB |
|---|---|---|---|---|
| Opposed by Single(S) or Multiple(M) lane approach | | | | |
| Cycle length, C  66.0 sec | | | | |
| Total actual green time for LT lane group, G (s) | | | | |
| Effective permitted green time for LT lane group, g(s) | | | | |
| Opposing effective green time, go (s) | | | | |
| Number of lanes in LT lane group, N | | | | |
| Number of lanes in opposing approach, No | | | | |
| Adjusted LT flow rate, VLT (veh/h) | | | | |
| Proportion of LT in LT lane group, PLT | 0.000 | 0.000 | 0.000 | 0.000 |
| Proportion of LT in opposing flow, PLTo | | | | |
| Adjusted opposing flow rate, Vo (veh/h) | | | | |
| Lost time for LT lane group, tL | | | | |
| Computation | | | | |
| LT volume per cycle, LTC=VLTC/3600 | | | | |
| Opposing lane util. factor, fLUo | 1.000 | 1.000 | 1.000 | 1.000 |

Opposing flow, Volc=VoC/[3600(No)fLUo] (veh/ln/cyc)
gf=G[exp(- a * (LTC ** b)]-tl, gf<=g
Opposing platoon ratio, Rpo (refer Exhibit 16-11)
Opposing Queue Ratio, qro=Max[1-Rpo(go/C),0]
gq, (see Exhibit C16-4,5,6,7,8)
gu=g-gq if gq>=gf, or = g-gf if gq<gf
n=Max(gq-gf)/2,0)
PTHo=1-PLTo
PL*=PLT[1+(N-1)g/(gf+gu/EL1+4.24)]
EL1 (refer to Exhibit C16-3)
EL2=Max((1-Ptho**n)/Plto, 1.0)
fmin=2(1+PL)/g  or  fmin=2(1+Pl)/g
gdiff=max(gq-gf,0)
fm=[gf/g]+[gu/g]/[1+PL(EL1-1)], (min=fmin;max=1.00)
flt=fm=[gf/g]+[gu/g]/[1+PL(EL1-1)]+[gdiff/g]/[1+PL(EL2-1)],(fmin<=fm<=1.00)
or flt=[fm+0.91(N-1)]/N**
Left-turn adjustment, fLT

For special case of single-lane approach opposed by multilane approach, see text.
* If Pl>=1 for shared left-turn lanes with N>1, then assume de-facto left-turn lane and redo calculations.
** For permitted left-turns with multiple exclusive left-turn lanes, flt=fm.
For special case of multilane approach opposed by single-lane approach or when gf>gq, see text.

## SUPPLEMENTAL PEDESTRIAN-BICYCLE EFFECTS WORKSHEET
Permitted Left Turns

| | EB | WB | NB | SB |
|---|---|---|---|---|
| Effective pedestrian green time, gp (s) | | | | |
| Conflicting pedestrian volume, Vped (p/h) | | | | |
| Pedestrian flow rate, Vpedg (p/h) | | | | |
| OCCpedg | | | | |
| Opposing queue clearing green, gq (s) | | | | |
| Eff. ped. green consumed by opp. veh. queue, gq/gp | | | | |
| OCCpedu | | | | |
| Opposing flow rate, Vo (veh/h) | | | | |
| OCCr | | | | |
| Number of cross-street receiving lanes, Nrec | | | | |
| Number of turning lanes, Nturn | | | | |
| ApbT | | | | |
| Proportion of left turns, PLT | | | | |
| Proportion of left turns using protected phase, PLTA | | | | |
| Left-turn adjustment, fLpb | | | | |
| Permitted Right Turns | | | | |
| Effective pedestrian green time, gp (s) | | | | |
| Conflicting pedestrian volume, Vped (p/h) | | | | |
| Conflicting bicycle volume, Vbic (bicycles/h) | | | | |
| Vpedg | | | | |
| OCCpedg | | | | |
| Effective green, g (s) | | | | |
| Vbicg | | | | |

OCCbicg
OCCr
Number of cross-street receiving lanes, Nrec
Number of turning lanes, Nturn
ApbT
Proportion right-turns, PRT
Proportion right-turns using protected phase, PRTA
Right turn adjustment, fRpb

## SUPPLEMENTAL UNIFORM DELAY WORKSHEET

| | | EBLT | WBLT | NBLT | SBLT |
|---|---|---|---|---|---|
| Cycle length, C | 66.0 sec | | | | |
| Adj. LT vol from Vol Adjustment Worksheet, v | | | | | |
| v/c ratio from Capacity Worksheet, X | | | | | |
| Protected phase effective green interval, g (s) | | | | | |
| Opposing queue effective green interval, gq | | | | | |
| Unopposed green interval, gu | | | | | |
| Red time r=(C-g-gq-gu) | | | | | |
| Arrival rate, qa=v/(3600(max[X,1.0])) | | | | | |
| Protected ph. departure rate, Sp=s/3600 | | | | | |
| Permitted ph. departure rate, Ss=s(gq+gu)/(gu*3600) | | | | | |
| XPerm | | | | | |
| XProt | | | | | |
| Case | | | | | |
| Queue at beginning of green arrow, Qa | | | | | |
| Queue at beginning of unsaturated green, Qu | | | | | |
| Residual queue, Qr | | | | | |
| Uniform Delay, d1 | | | | | |

## DELAY/LOS WORKSHEET WITH INITIAL QUEUE

| Appr/ Lane Group | Initial Unmet Demand Q veh | Dur. Unmet Demand t hrs. | Uniform Delay Unadj. ds | Uniform Delay Adj. d1 sec | Initial Queue Param. u | Final Unmet Demand Q veh | Initial Queue Delay d3 sec | Lane Group Delay d sec |
|---|---|---|---|---|---|---|---|---|
| Eastbound | | | | | | | | |
| L | 0.0 | 0.00 | 30.6 | 30.6 | 0.00 | 5.3 | 0.0 | 158.7 |
| TR | 0.0 | 0.00 | 26.4 | 26.4 | 0.00 | 53.2 | 0.0 | 293.2 |
| | 0.0 | | | | | | 0.0 | |
| Westbound | | | | | | | | |
| L | 0.0 | 0.00 | 31.7 | 31.7 | 0.00 | 9.3 | 0.0 | 325.3 |
| TR | 0.0 | 0.00 | 27.9 | 27.9 | 0.00 | 68.5 | 0.0 | 461.0 |
| | 0.0 | | | | | | 0.0 | |
| Northbound | | | | | | | | |
| L | 0.0 | 0.00 | 31.9 | 31.9 | 0.00 | 9.5 | 0.0 | 380.2 |
| TR | 0.0 | 0.00 | 29.5 | 29.5 | 0.00 | 58.8 | 0.0 | 591.1 |
| | 0.0 | | | | | | 0.0 | |
| Southbound | | | | | | | | |
| L | 0.0 | 0.00 | 32.2 | 32.2 | 0.00 | 18.0 | 0.0 | 795.7 |
| TR | 0.0 | 0.00 | 28.9 | 28.9 | 0.00 | 40.0 | 0.0 | 364.2 |
| | 0.0 | | | | | | 0.0 | |

Intersection Delay 416.2 sec/veh  Intersection LOS F

## BACK OF QUEUE WORKSHEET

| | Eastbound | | | Westbound | | | Northbound | | | Southbound | | |
|---|---|---|---|---|---|---|---|---|---|---|---|---|
| LaneGroup | L | TR | | L | TR | | L | TR | | L | TR | |
| Init Queue | 0.0 | 0.0 | | 0.0 | 0.0 | | 0.0 | 0.0 | | 0.0 | 0.0 | |
| Flow Rate | 152 | 590 | | 108 | 567 | | 98 | 429 | | 118 | 387 | |
| So | 1900 | 1900 | | 1900 | 1900 | | 1900 | 1900 | | 1900 | 1900 | |
| No.Lanes | 1 | 1 | 0 | 1 | 1 | 0 | 1 | 1 | 0 | 1 | 1 | 0 |
| SL | 1805 | 1869 | | 1805 | 1876 | | 1805 | 1860 | | 1805 | 1831 | |
| LnCapacity | 131 | 377 | | 71 | 293 | | 60 | 194 | | 46 | 227 | |
| Flow Ratio | 0.1 | 0.3 | | 0.1 | 0.3 | | 0.1 | 0.2 | | 0.1 | 0.2 | |
| v/c Ratio | 1.16 | 1.56 | | 1.52 | 1.94 | | 1.63 | 2.21 | | 2.57 | 1.70 | |
| Grn Ratio | 0.07 | 0.20 | | 0.04 | 0.16 | | 0.03 | 0.10 | | 0.03 | 0.12 | |
| I Factor | | 1.000 | | | 1.000 | | | 1.000 | | | 1.000 | |
| AT or PVG | 3 | 3 | | 3 | 3 | | 3 | 3 | | 3 | 3 | |
| Pltn Ratio | 1.00 | 1.00 | | 1.00 | 1.00 | | 1.00 | 1.00 | | 1.00 | 1.00 | |
| PF2 | 1.00 | 1.00 | | 1.00 | 1.00 | | 1.00 | 1.00 | | 1.00 | 1.00 | |
| Q1 | 2.8 | 10.8 | | 2.0 | 10.4 | | 1.8 | 7.9 | | 2.2 | 7.1 | |
| kB | 0.2 | 0.5 | | 0.1 | 0.4 | | 0.1 | 0.3 | | 0.1 | 0.3 | |
| Q2 | 3.7 | 27.9 | | 5.0 | 35.0 | | 5.1 | 29.9 | | 9.2 | 20.8 | |
| Q Average | 6.5 | 38.7 | | 7.0 | 45.4 | | 6.9 | 37.8 | | 11.3 | 27.9 | |
| Q Spacing | 25.0 | 25.0 | | 25.0 | 25.0 | | 25.0 | 25.0 | | 25.0 | 25.0 | |
| Q Storage | 0 | 0 | | 0 | 0 | | 0 | 0 | | 0 | 0 | |
| Q S Ratio | | | | | | | | | | | | |
| 70th Percentile Output: | | | | | | | | | | | | |
| fB% | 1.2 | 1.2 | | 1.2 | 1.2 | | 1.2 | 1.2 | | 1.2 | 1.2 | |
| BOQ | 8.0 | 46.4 | | 8.6 | 54.5 | | 8.4 | 45.3 | | 13.7 | 33.4 | |
| QSRatio | | | | | | | | | | | | |
| 85th Percentile Output: | | | | | | | | | | | | |
| fB% | 1.5 | 1.4 | | 1.5 | 1.4 | | 1.5 | 1.4 | | 1.4 | 1.4 | |
| BOQ | 9.7 | 54.1 | | 10.3 | 63.6 | | 10.1 | 52.9 | | 16.2 | 39.0 | |
| QSRatio | | | | | | | | | | | | |
| 90th Percentile Output: | | | | | | | | | | | | |
| fB% | 1.6 | 1.5 | | 1.6 | 1.5 | | 1.6 | 1.5 | | 1.6 | 1.5 | |
| BOQ | 10.7 | 58.0 | | 11.4 | 68.2 | | 11.2 | 56.7 | | 17.6 | 41.8 | |
| QSRatio | | | | | | | | | | | | |
| 95th Percentile Output: | | | | | | | | | | | | |
| fB% | 1.9 | 1.6 | | 1.8 | 1.6 | | 1.9 | 1.6 | | 1.7 | 1.6 | |
| BOQ | 12.2 | 61.9 | | 12.9 | 72.7 | | 12.7 | 60.4 | | 19.3 | 44.7 | |
| QSRatio | | | | | | | | | | | | |
| 98th Percentile Output: | | | | | | | | | | | | |
| fB% | 2.1 | 1.7 | | 2.1 | 1.7 | | 2.1 | 1.7 | | 1.9 | 1.7 | |
| BOQ | 13.8 | 65.8 | | 14.5 | 77.2 | | 14.3 | 64.2 | | 21.0 | 47.5 | |
| QSRatio | | | | | | | | | | | | |

## ERROR MESSAGES

No errors to report.

# Appendix D

Turning Movements
Present Conditions

**HILO FAMILY ENTERTAINMENT CENTER**
**Kekuanaoa Street-Manono Street**
**Traffic Movement-Existing Conditions**
**AM Peak Hour-7:15 AM to 8:15 AM**

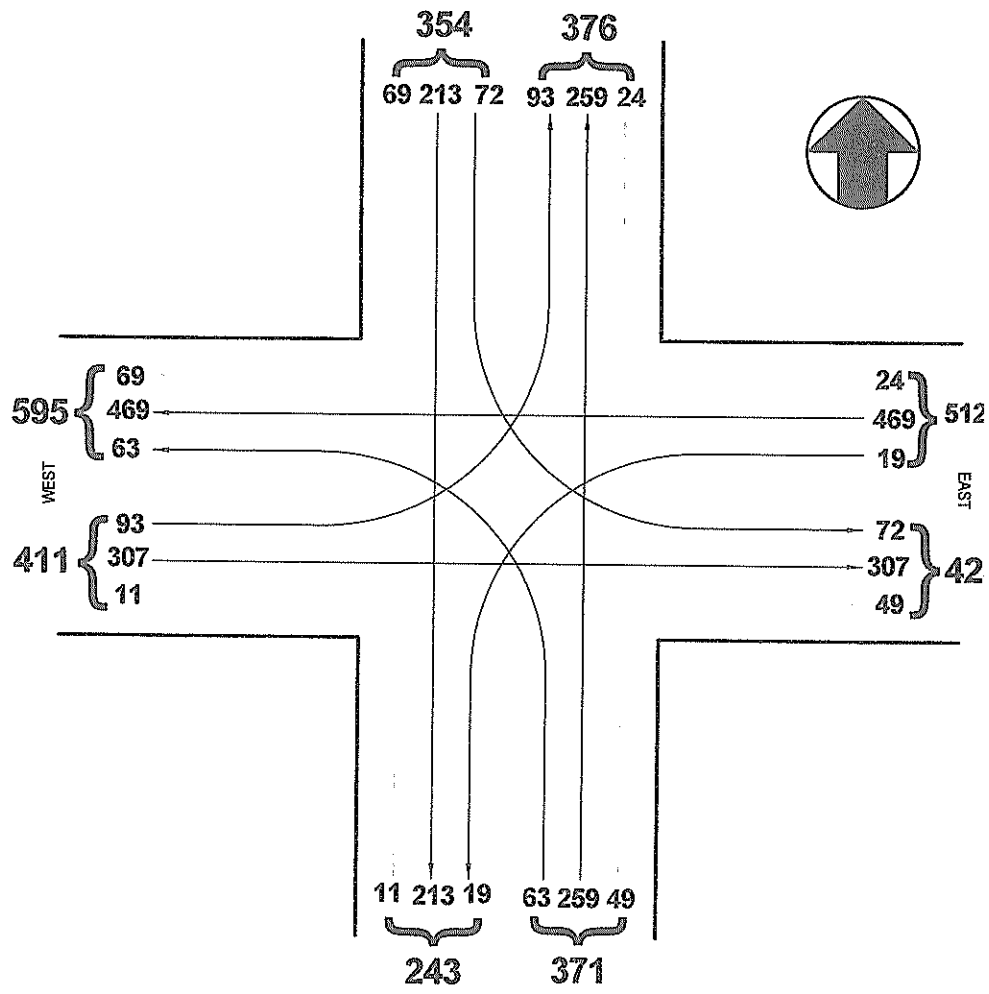


JN 560-01-08
2/27/08
kemaame

WITCHER ENGINEERING LLP
75-5751 Kuakini Hwy., Ste 108
Kailua-Kona, Hawaii 96740
(808) 334-0322
Consulting Civil Engineers
Construction Managers

## HILO FAMILY ENTERTAINMENT CENTER
### Kekuanaoa Street-Manono Street
### Traffic Movement-Future Conditions
### PM Peak Hour-4:00 PM to 5:00 PM

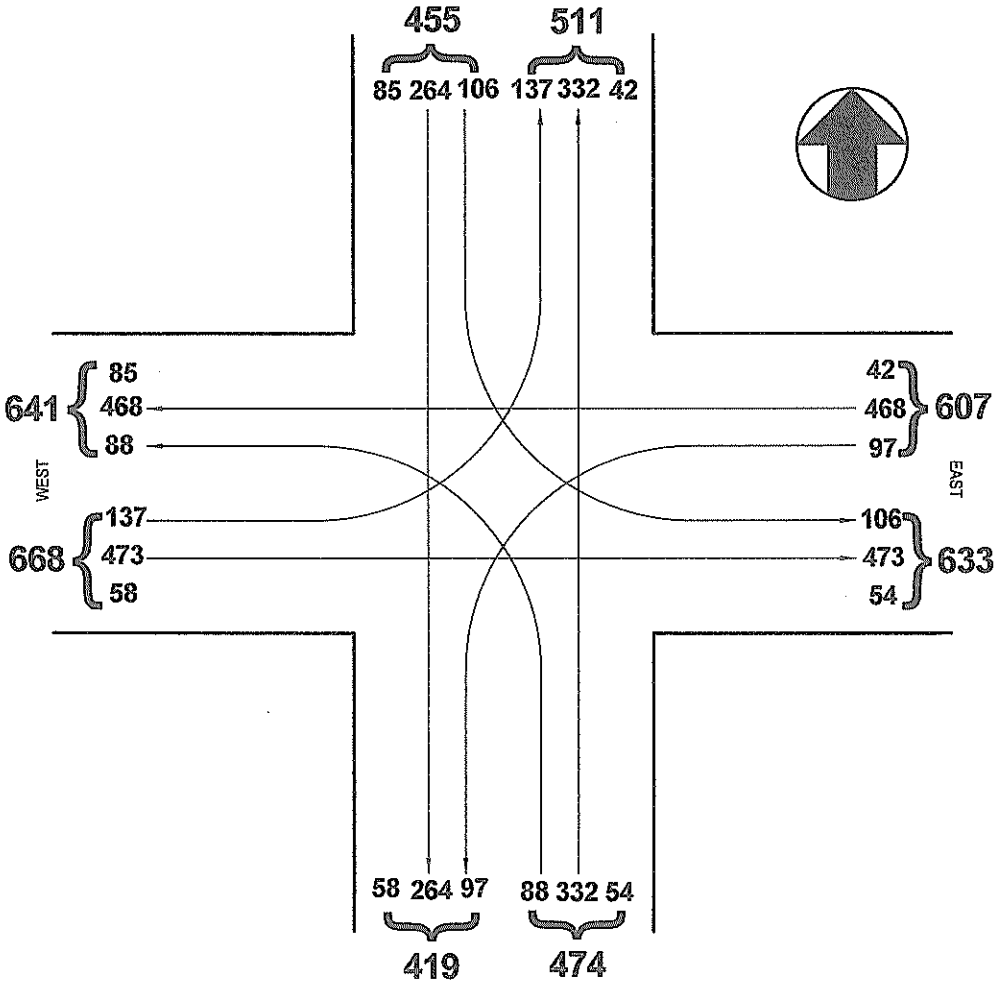


JN 560-01-08
2/27/08
kemapmf

WITCHER ENGINEERING LLP
75-5751 Kuakini Hwy., Ste 106
Kailua-Kona, Hawaii 96740
(808) 334-0322
Consulting Civil Engineers
Construction Managers

## HILO FAMILY ENTERTAINMENT CENTER
### Kekuanaoa Street-Mililani Street
### Traffic Movement-Future Conditions
### AM Peak Hour-7:15 AM to 8:15 AM

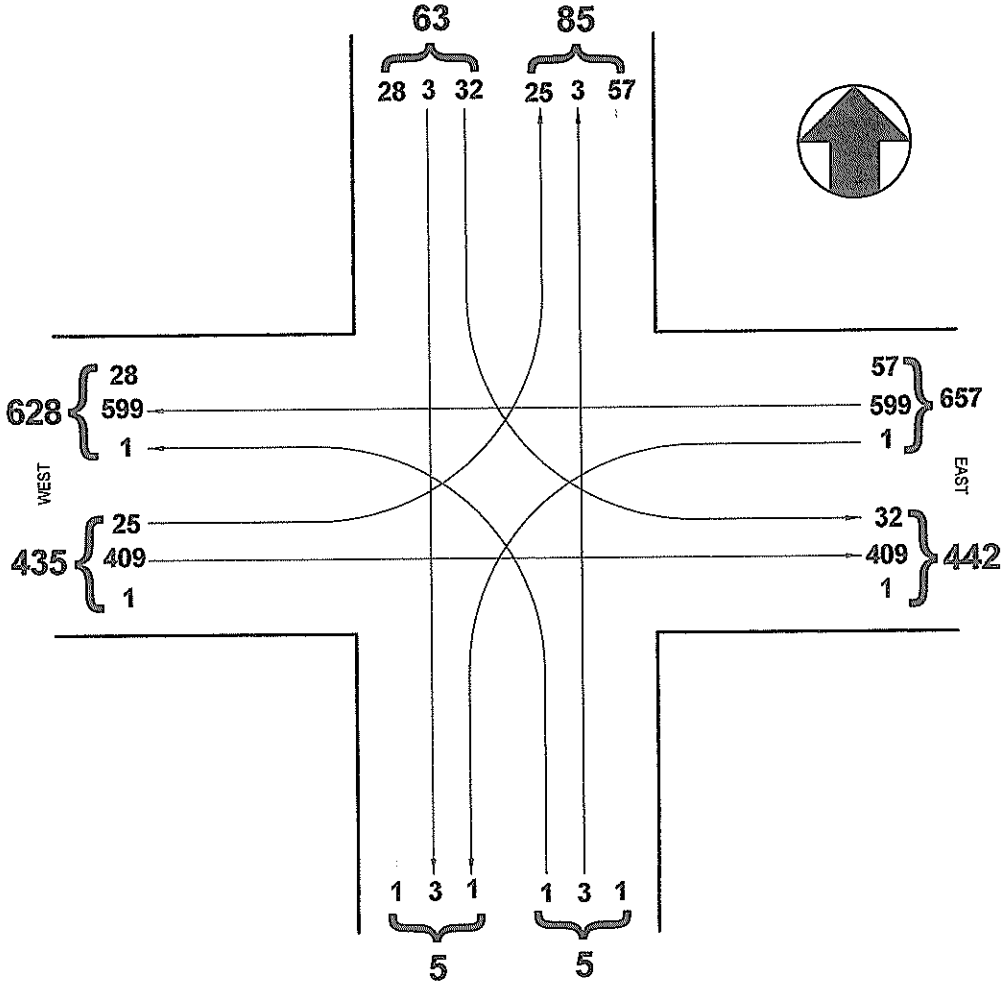


JN 560-01-08
2/27/08
kemlamf

WITCHER ENGINEERING LLP
75-5751 Kuakini Hwy., Ste 106
Kailua-Kona, Hawaii 96740
(808) 334-0322
Consulting Civil Engineers
Construction Managers

**HILO FAMILY ENTERTAINMENT CENTER**
**Kekuanaoa Street-Mililani Street**
**Traffic Movement-Future Conditions**
**PM Peak Hour-4:00 PM to 5:00 PM**

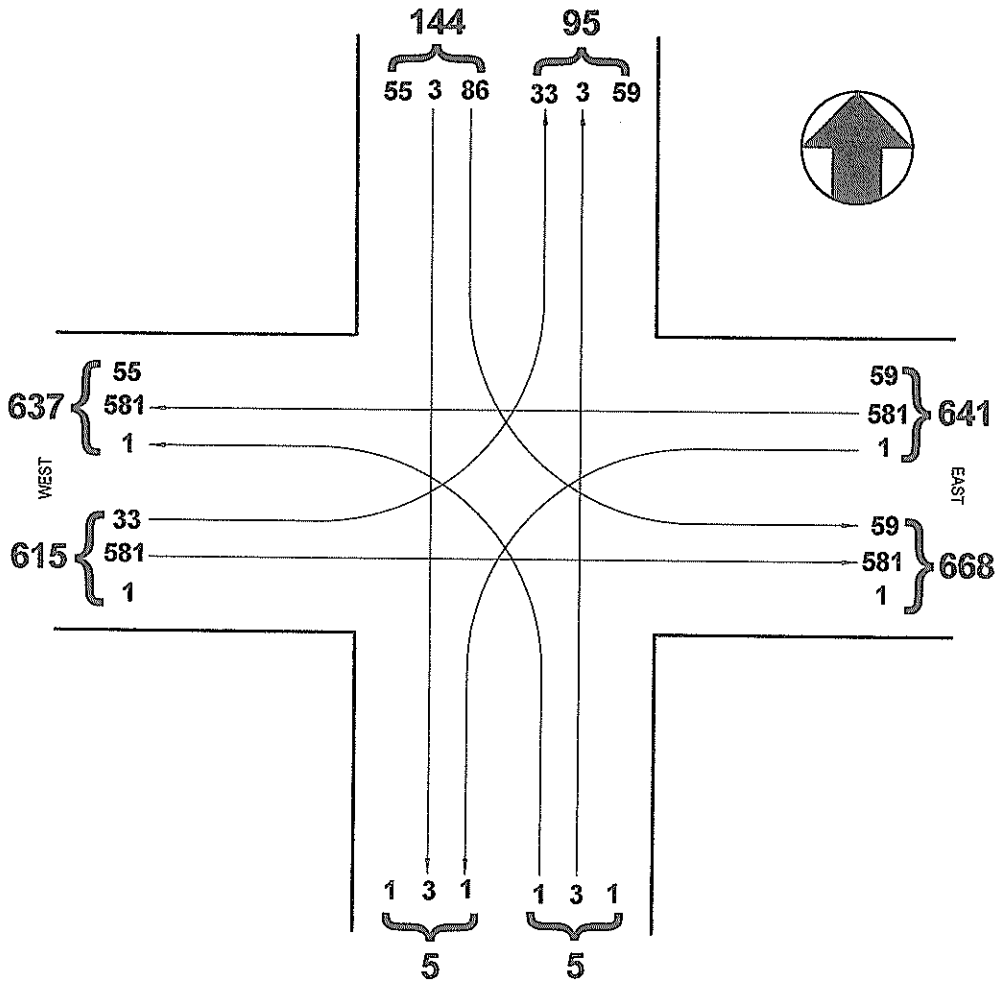


JN 560-01-08
2/27/08
kemlpml

WITCHER ENGINEERING LLP
75-5751 Kuakini Hwy., Ste 100
Kailua-Kona, Hawaii 96740
(808) 334-0322
Consulting Civil Engineers
Construction Managers

# Appendix E

Turning Movements
Future Conditions

## HILO FAMILY ENTERTAINMENT CENTER
### Kekuanaoa Street-Manono Street
### Traffic Movement-Future Conditions
### AM Peak Hour-7:15 AM to 8:15 AM

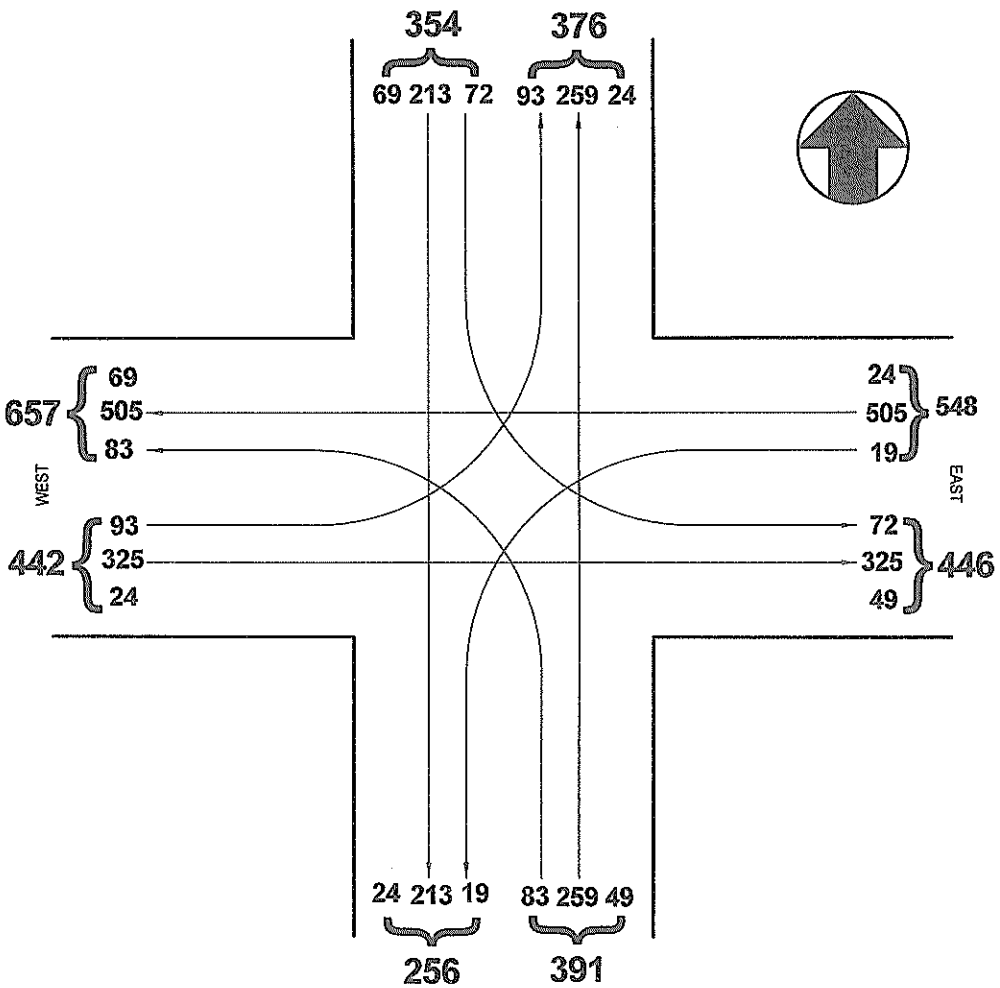


JN 560-01-08
2/27/08
kemaamf

WITCHER ENGINEERING LLP
75-5751 Kuakini Hwy., Ste 106
Kailua-Kona, Hawaii 96740
(808) 334-0322
Consulting Civil Engineers
Construction Managers

## HILO FAMILY ENTERTAINMENT CENTER
### Kekuanaoa Street-Manono Street
### Traffic Movement-Existing Conditions
### PM Peak Hour-4:00 PM to 5:00 PM

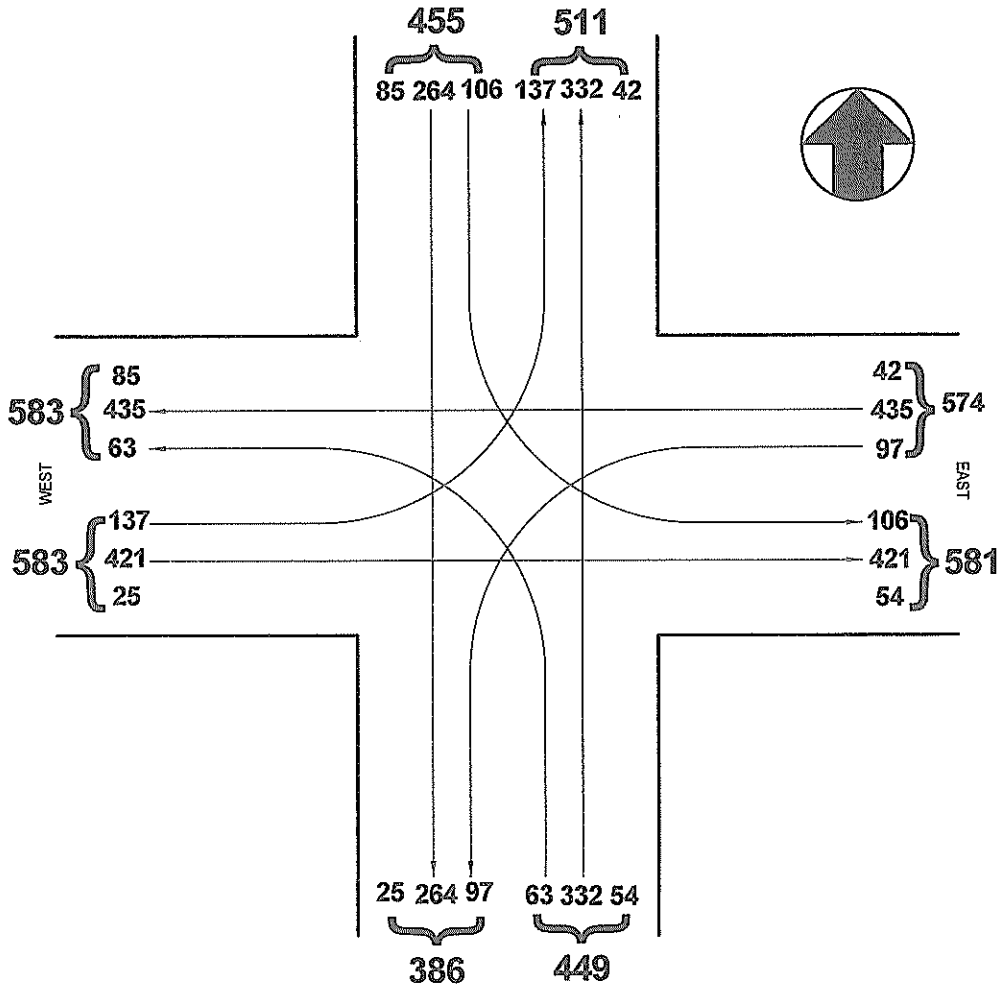


JN 560-01-08
2/27/08
kemapme

WITCHER ENGINEERING LLP
75-5751 Kuakini Hwy., Ste 106
Kailua-Kona, Hawaii 96740
(808) 334-0322
Consulting Civil Engineers
Construction Managers

# Appendix F

## Level of Service Criteria for Signalized Intersection Unsignalized Intersection

### LEVEL OF SERVICE CRITERIA FOR SIGNALIZED INTERSECTIONS

| RESERVE CAPACITY (PCPH) | LEVEL OF SERVICE | EXPECTED DELAY TO MINOR STREET TRAFFIC |
|---|---|---|
| ≥400 | A | Little or no delay |
| 300-399 | B | Short traffic delays |
| 200-299 | C | Average traffic delays |
| 100-199 | D | Long traffic delays |
| 0-99 | E | Very long traffic delays |
| • | F | Extreme traffic delays |

•When demand volume exceeds the capacity of the lane, extreme delays will be encountered with queuing which may cause severe congestion affecting other traffic movements in the intersection. This condition usually warrants improvement to the intersection.

## LEVEL OF SERVICE CRITERIA
## FOR
## UNSIGNALIZED INTERSECTIONS

| RESERVE CAPACITY (PCPH) | LEVEL OF SERVICE | EXPECTED DELAY TO MINOR STREET TRAFFIC |
|---|---|---|
| ≥400 | A | Little or no delay |
| 300-399 | B | Short traffic delays |
| 200-299 | C | Average traffic delays |
| 100-199 | D | Long traffic delays |
| 0-99 | E | Very long traffic delays |
| • | F | Extreme traffic delays |

•When demand volume exceeds the capacity of the lane, extreme delays will be encountered with queuing which may cause severe congestion affecting other traffic movements in the intersection. This condition usually warrants improvement to the intersection.